SIDE ELEVATION

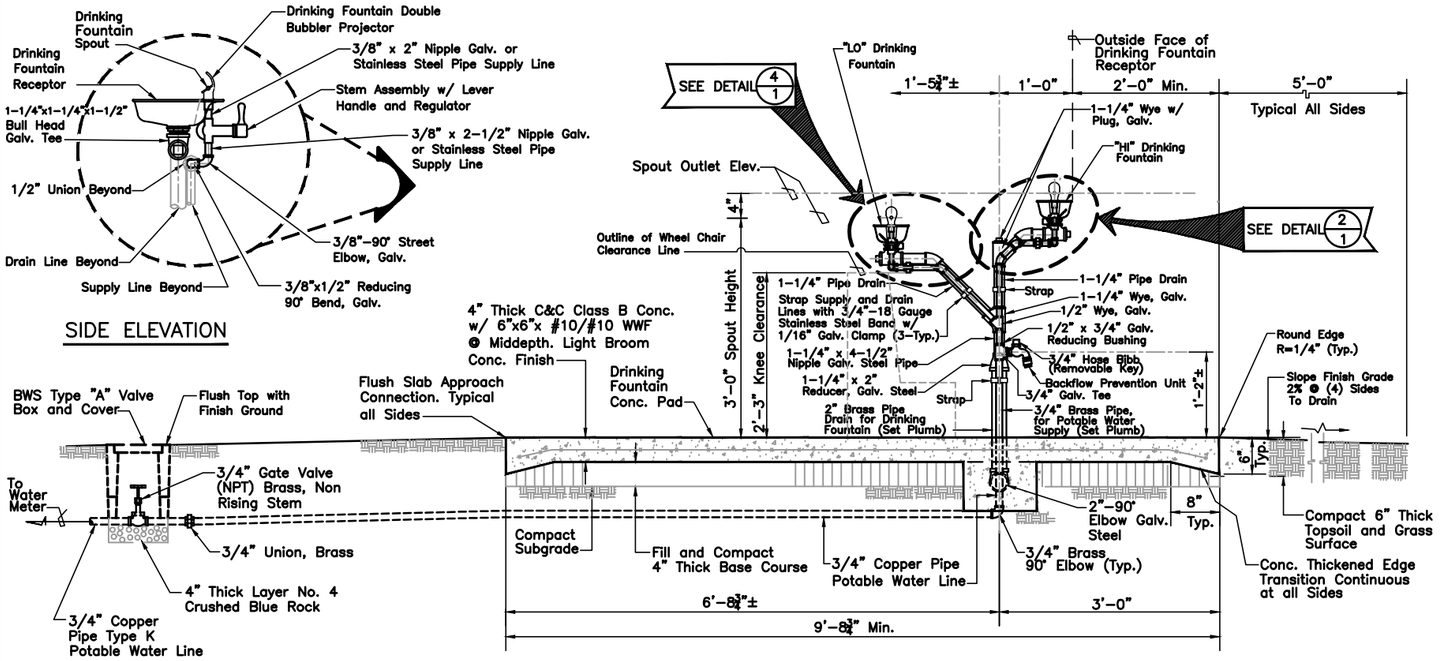

SECTION SCALE 1"=1'-0" 11

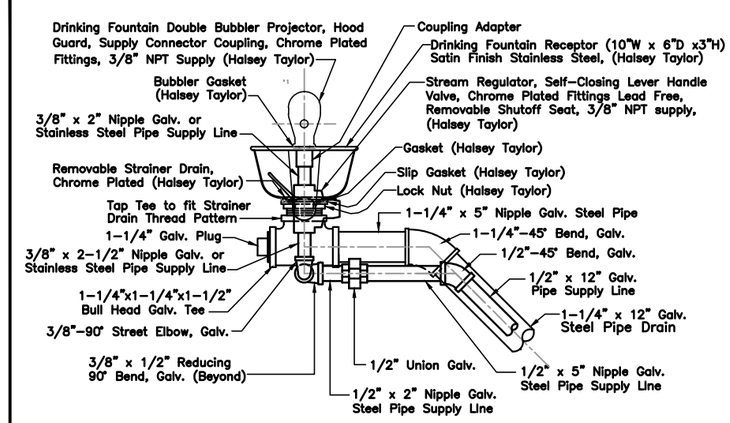

'LO' DRINKING FOUNTAIN DETAIL SCALE 3"=1'-0" 4

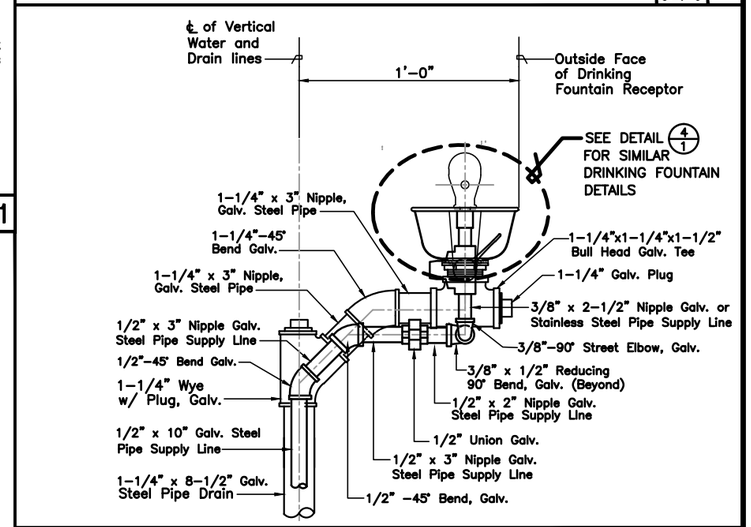

'HI' DRINKING FOUNTAIN DETAIL SCALE 3"=1'-0" 2

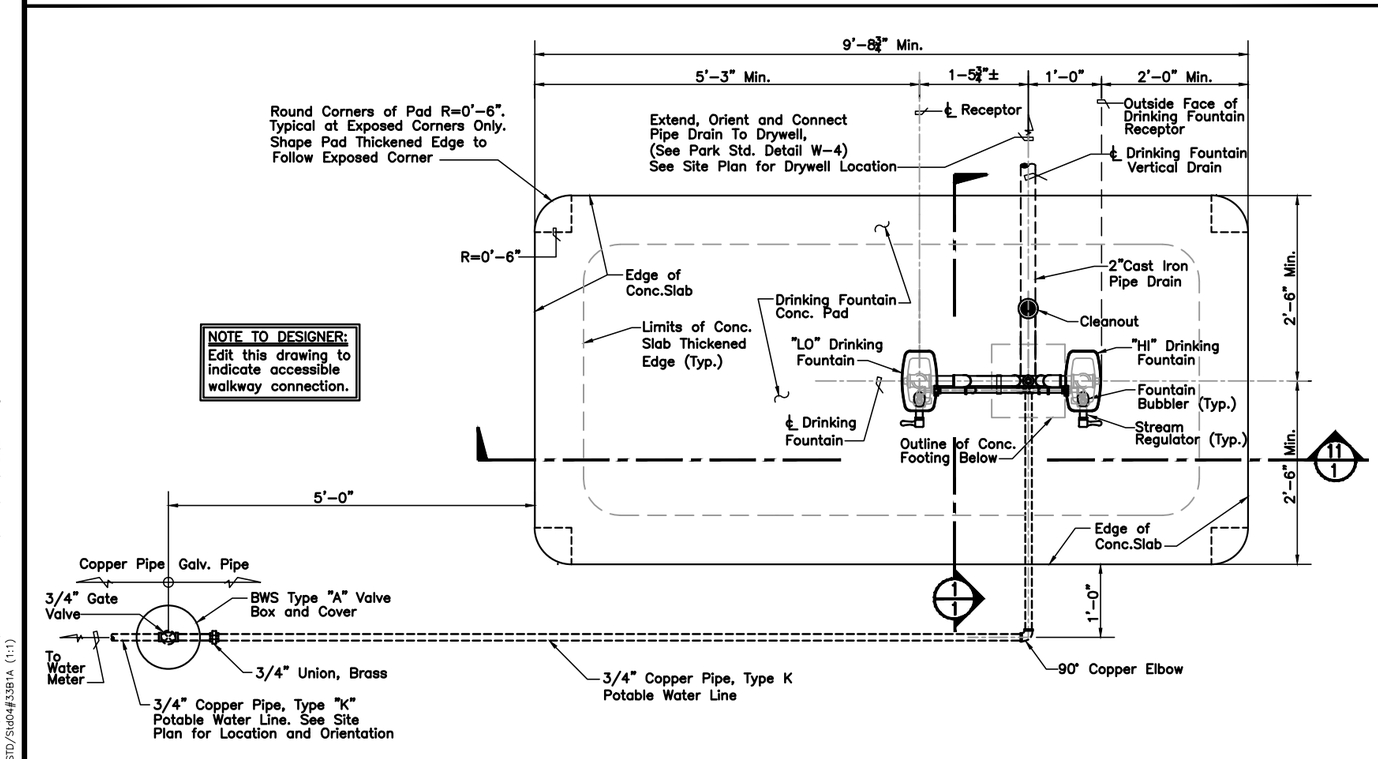

PLAN SCALE 1"=1'-0" 9

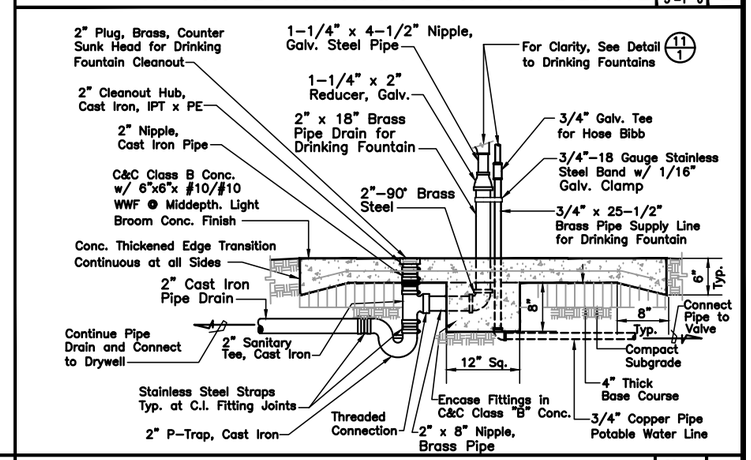

SECTION SCALE 1"=1'-0" 1

REVISION	DATE	DESCRIPTION	MADE BY	APPROVED

THIS WORK WAS PREPARED BY ME OR UNDER MY SUPERVISION AND CONSTRUCTION OF THIS PROJECT WILL BE UNDER MY OBSERVATION

DESIGNED BY: H.M.
REVIEWED BY: H.M.
DRAWN BY: M.I.
DATE: DEC. 2013

DEPARTMENT OF DESIGN AND CONSTRUCTION
CITY & COUNTY OF HONOLULU

ACCESSIBLE "HI-LO"
DRINKING FOUNTAIN DETAILS
SCHEME 33B1A

JOB NO.
DRAWING NO.
SHEET NO. 1 OF 1
FILE NO. STD. 33B2

J:/FD B/DWG -Completed/PARKSTD\DPR Standard Det\Water\W-5(33B2)2013.dwg
J:/FDE/PARKSTD/Std04#33B1A (1:1)

SCHEME 33B2A REV