NOTE:

All Welded Connections and Plates Shall Be Painted with Two Coats of ZRC Cold Galvanizing Compound

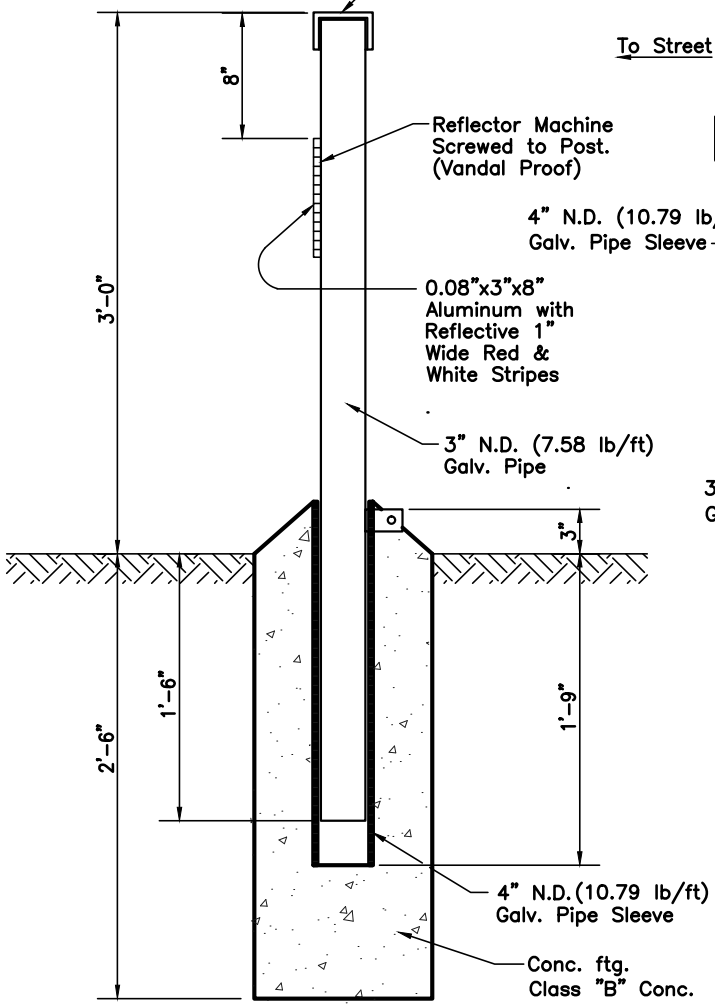


ELEVATION

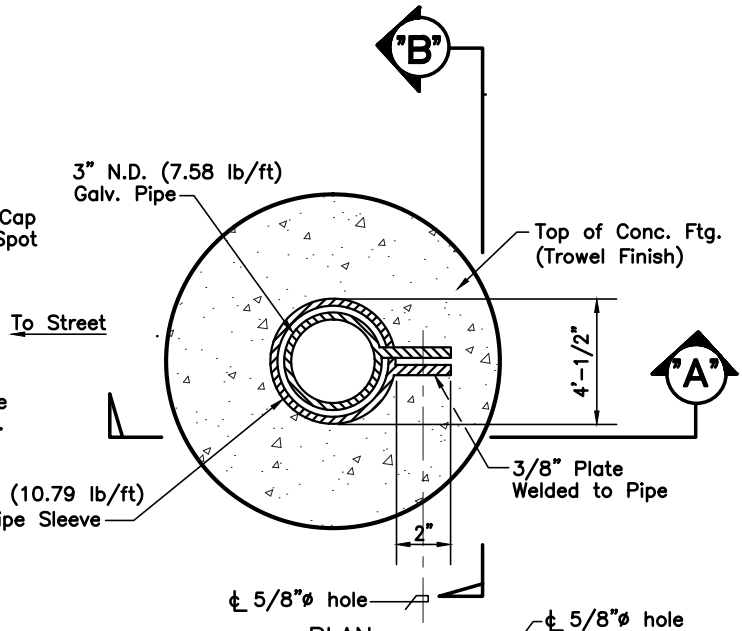


PLAN

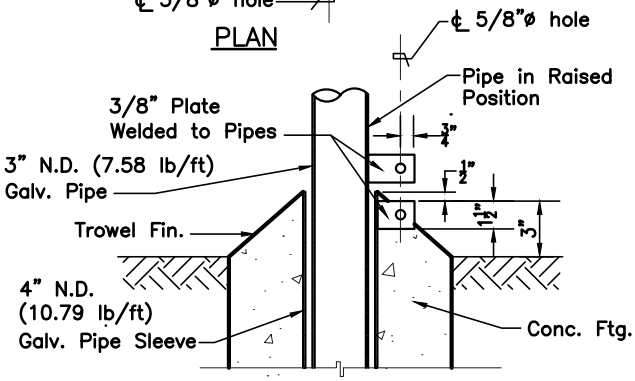


SECTION "A"

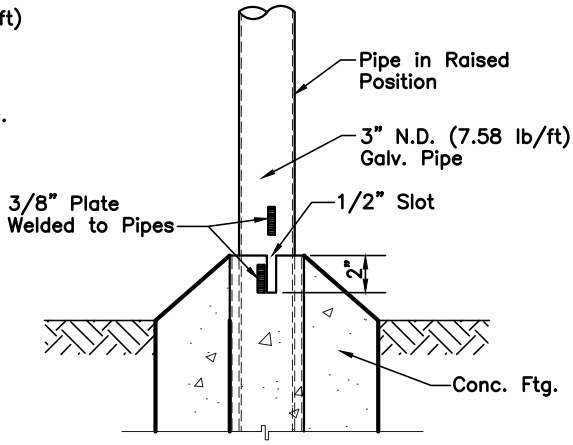


SECTION "B"

M-3(F)

| | | | |
|---|---|---|---|
| CITY COUNTY OF HONOLULU | **REMOVABLE PIPE BARRIER DETAIL**<br>SCALE: NOT TO SCALE REVISED: APRIL 2003 | STANDARD DETAILS | **M-3** |