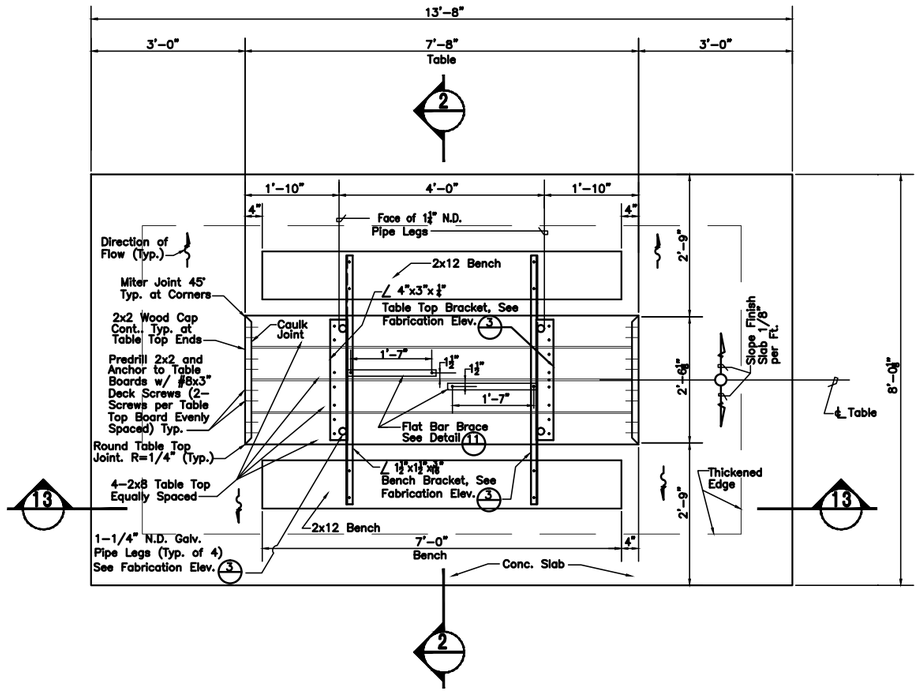

PLAN SCALE: 3/4"=1'-0" 14

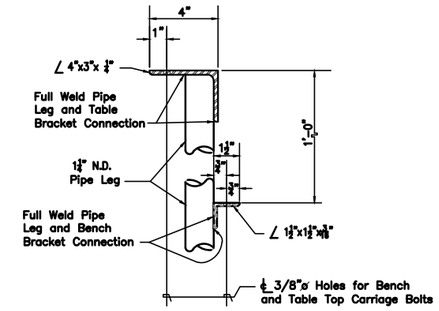

ANGLE FRAME DETAIL SCALE: NONE 12

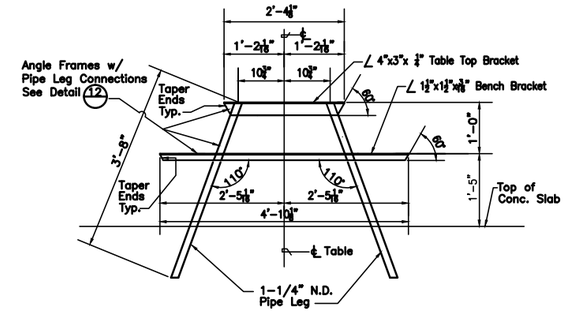

FABRICATION ELEVATION SCALE: NONE 3

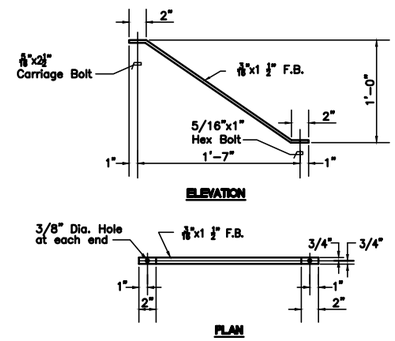

BRACE DETAIL SCALE: NONE 11

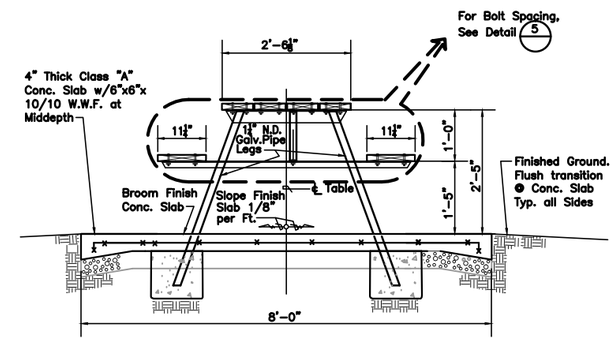

SECTION SCALE: NONE 2

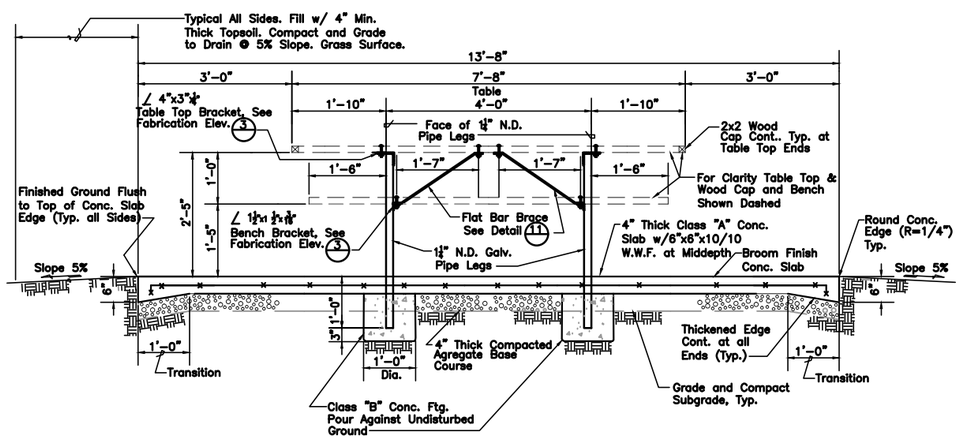

SECTION SCALE: NONE 13

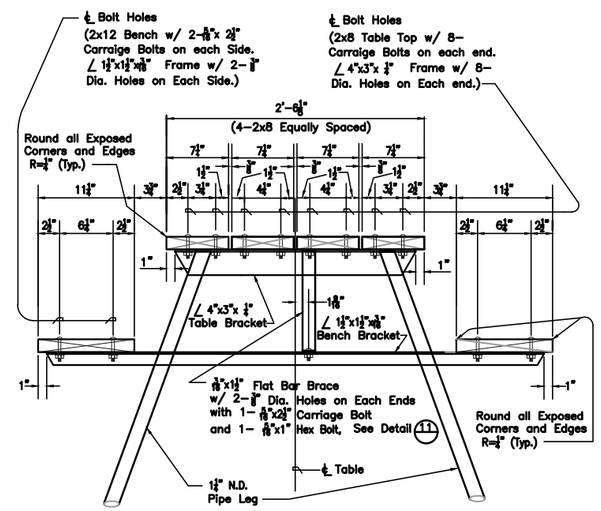

BOLT SPACING DETAIL SCALE: NONE 5

NOTES:

1. Materials:
   - A) 1½" N.D. (2.27lb/ft) x 3'-6" Length G.I. pipe (4 Required)
   - B) ∠ 4"x3"x¼" x 2'-4⅛" Length (2 Required)
   - C) ∠ 1½"x1½"x⅛" x 4'-10⅛" Length (2 Required)
   - D) 3/16"x1½"x2'-0" Length Flat Bar (2 Required)
   - E) 5/16"x2½" Carriage Bolts (26 Required)
   - F) 5/16"x1" Hex Bolt (2 Required)
   - G) 2"x8" x 8'-0" S4S, Douglas Fir , Grade "C" or Better, Select (and Wolmanized. (4 Required)
   - H) 2"x12" x 7'-0" S4S, Douglas Fir, Grade "C" or Better, Select and Wolmanized. (2 Required)
2. All structual steel shall be ASTM A36 and hot-dipped galvanized after fabrication. All structural steel connections shall be full welded. All welds shall be ground smooth and painted with two prime Coats of ZRC Cold Galvanizing Compound and two finish coats of ZRC Galvalite. All damaged galvanized surfaces shall be painted with two prime coats of ZRC cold galvanizing compound and two finish coats of ZRC Galvalite.
3. All bolts, nuts and washers shall be galv. ASTM A307 and hot dipped galvanized.
4. Painting Schedule:
   - A) Metal Surfaces-Wash surface with paint thinner and brush off with stiff brush.
     One coat: Devoe Acrylic Latex Primer DP85XX.
     Two coats Devoe Wonder-Guard Satin Exterior Acrylic DR24XX. Park Green.
   - B) Wood Surfaces:
     One coat: Devoe Acrylic Latex Primer DR78XX.
     Two coats Devoe Porch and Floor Satin Latex DR78XX. Park Green.
5. Concrete slab finish shall be broom finish.
6. All exposed wood edges and corners shall be founded R=1/4".

M-15(FF)

NOTES SCALE: NONE 1

CITY COUNTY OF HONOLULU	ACCESSIBLE PICNIC TABLE (PIPE/WOOD) SCALE: NOT TO SCALE REVISED: APRIL 2003	STANDARD DETAILS	M-15