NOTES:

1. 2" clear minimum concrete cover over all reinforcing.
2. Waterproof all concrete surfaces exposed to weathering with approved clear sealer.
3. All concrete shall be Class "A".
4. Concrete surfaces shall be Class 2, rubbed finish except top of concrete slab shall be broomed finish.

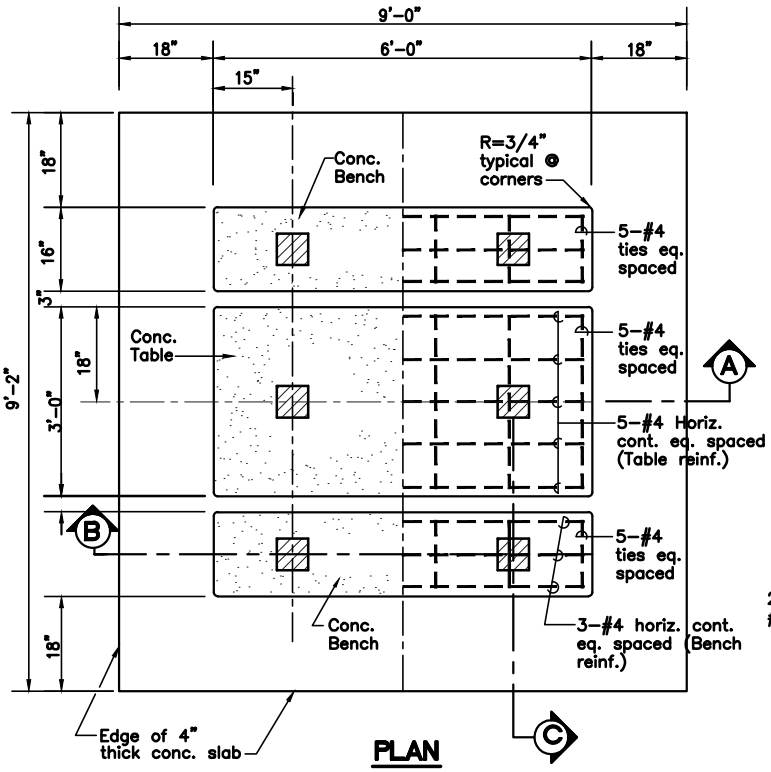

PLAN

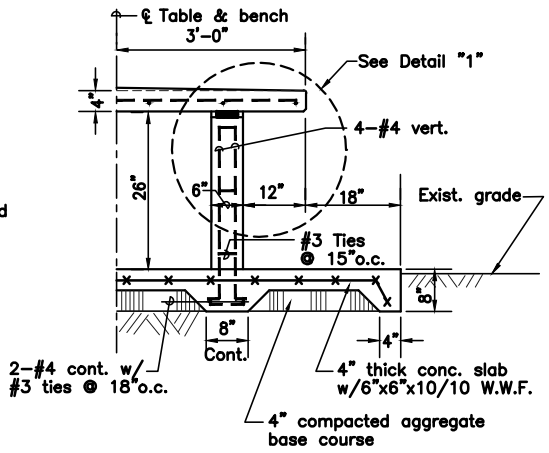

SECTION "A"

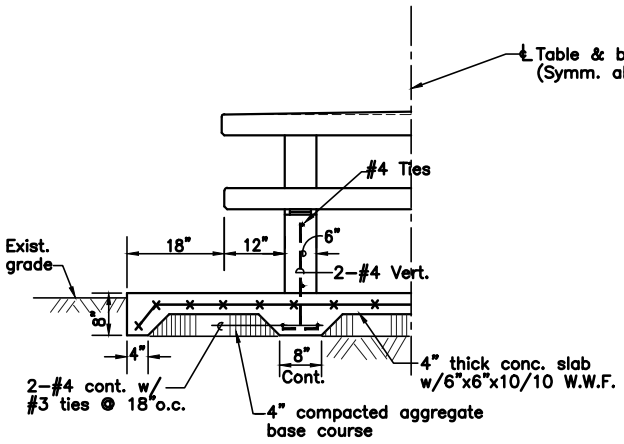

SECTION "B"

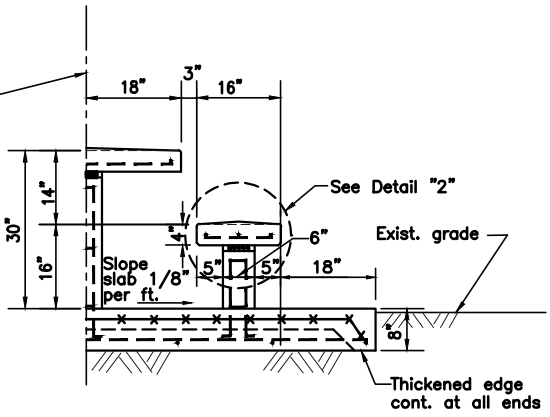

SECTION "C"

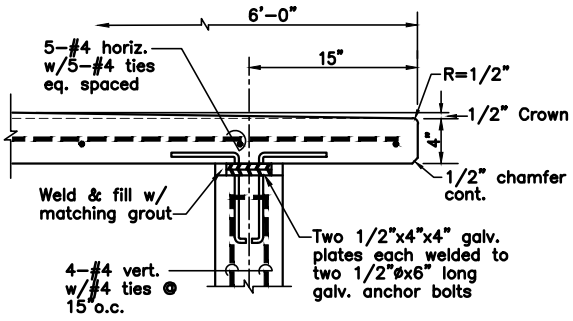

DETAIL "1"

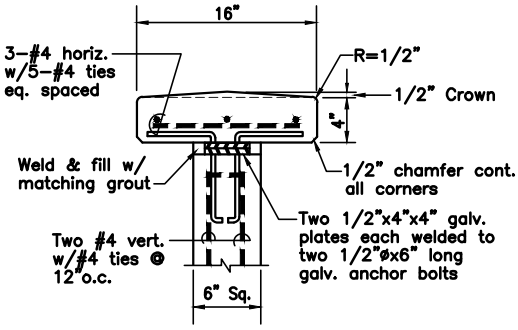

DETAIL "2"

M-13(F)

CITY COUNTY OF HONOLULU	PICNIC TABLE DETAIL (CONC.)	STANDARD DETAILS	M-13
	REVISED: APRIL 2003 SCALE: NOT TO SCALE		