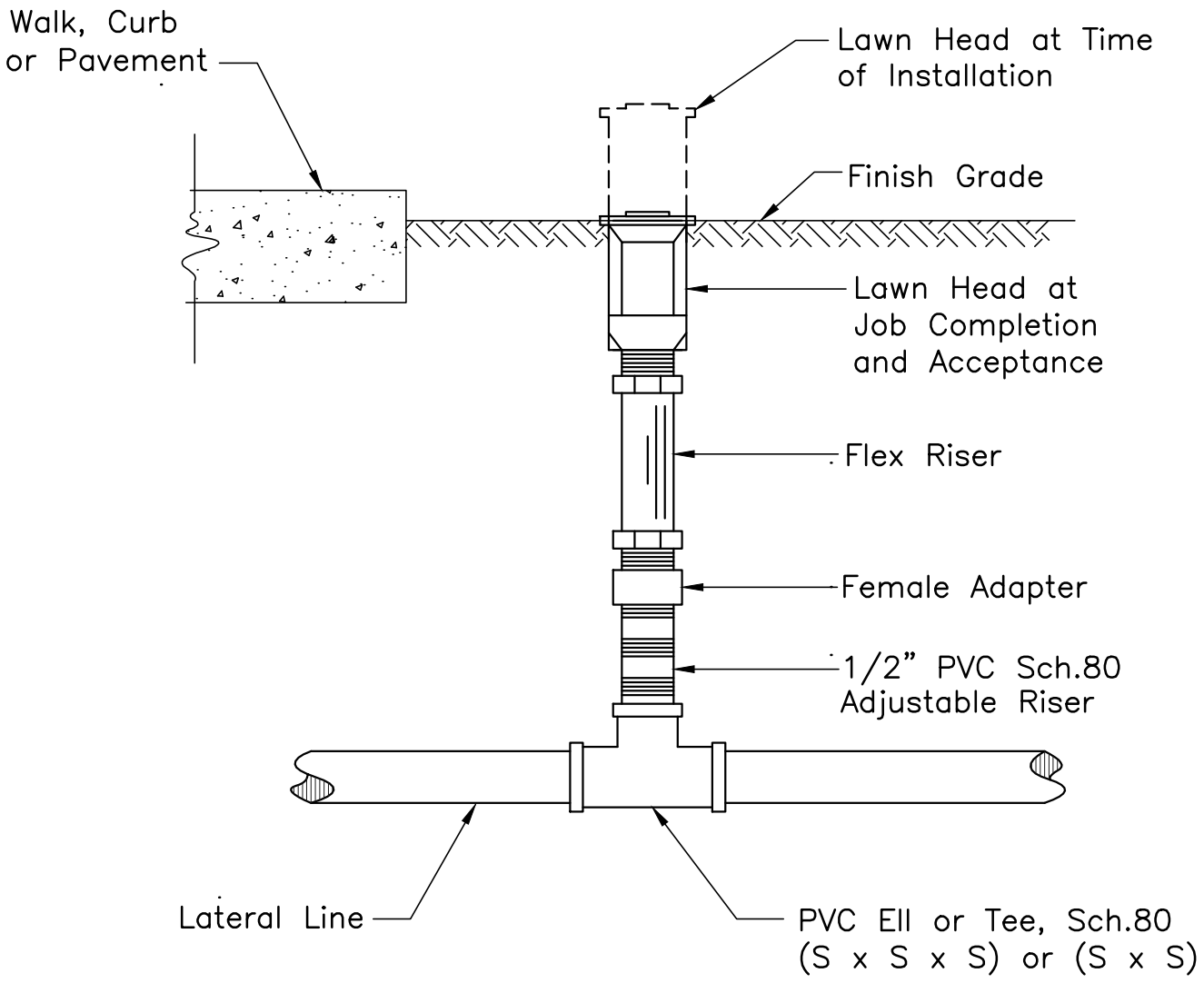

I-10(R)

I-10	STANDARD DETAILS	LAWN POP-UP HEAD DETAIL SCALE: NOT TO SCALE REVISED: APRIL 2003	CITY COUNTY OF HONOLULU