STANDARD DETAILS

FOR PUBLIC WORKS CONSTRUCTION

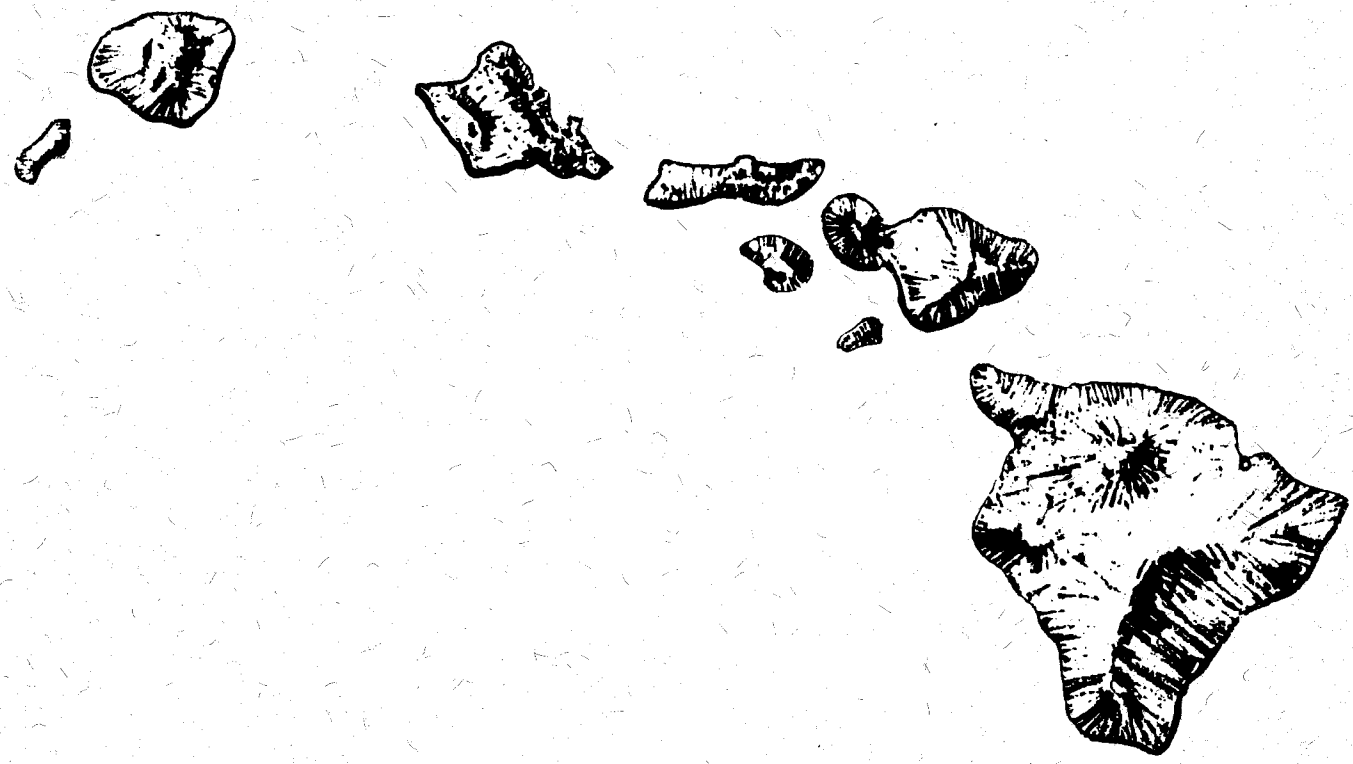

DEPARTMENTS OF PUBLIC WORKS
COUNTY OF KAUAI
CITY AND COUNTY OF HONOLULU
COUNTY OF MAUI
COUNTY OF HAWAII
OF THE STATE OF HAWAII

REVISED
SEPTEMBER 2000

SEPTEMBER 1984

STANDARD DETAILS

FOR PUBLIC WORKS CONSTRUCTION

DEPARTMENTS OF PUBLIC WORKS

COUNTY OF KAUAI
CITY AND COUNTY OF HONOLULU
COUNTY OF MAUI
COUNTY OF HAWAII

OF THE STATE OF HAWAII

LAWRENCE KITAMURA
COUNTY ENGINEER
COUNTY OF KAUAI

MICHAEL J. CHUN
DIRECTOR AND CHIEF ENGINEER
CITY AND COUNTY OF HONOLULU

RALPH HAYASHI
DIRECTOR
COUNTY OF MAUI

EDWARD HARADA
CHIEF ENGINEER
COUNTY OF HAWAII

Part 1 - Roads and Streets

CONTENTS

SHEET NO.	DESCRIPTION	APPLICABLE TO:			
		KAUAI	HON.	MAUI	HAWAII
R-1	Pre-cast Concrete Curb	●	●	●	●
R-2	Pre-cast Concrete Driveway Curb	●	●	●	●
R-3	Pre-cast Concrete Drop Curb Block	●	●	●	●
R-4	Integral Curb and Gutter, Integral Driveway Curb and Gutter	●	●	●	●
R-5	Rolled Curb	●	●	●	●
R-6	Rolled Curb Transition to Curbs and Catch Basins	●	●	●	●
R-7	Driveway Apron with Rolled Curb	●	●	●	●
R-8	Thru Gutter	●	●	●	●
R-9	Concrete Pavement	●	●	●	●
R-10	Concrete Pavement Joint Details	●	●	●	●
R-11	Concrete Pavement Joint Details	●	●	●	●
R-12	Street Survey Monument	●	●	●	●
R-13	Street Survey Monument Castings	●	●	●	●
R-14	Centerline Monument	●	●	●	●
R-15	Temporary Wooden Barricade	●	●	●	●
R-16	Sidewalk Reinforcement Details at Utility Boxes or Openings	●	●	●	●
R-17	Tree Well with Concrete Cover	●	●	●	●
R-18	3′ or 4′ Chain Link Fence	●	●	●	●
R-19	6′ Chain Link Fence	●	●	●	●
R-20	Typical Single Gate	●	●	●	●
R-21	Typical Double Gate	●	●	●	●
R-22	Metal Guardrail Details	●	●	●	●
R-23	Metal Guardrail Details	●	●	●	●
R-24	Metal Guardrail Details	●	●	●	●
R-25	Wheelchair Ramp	●		●	●
R-25A	Curb Ramp		●		
R-26	Private Driveway Ramp	●	●	●	●
R-27	Full-width Sidewalk at Curb Return	●	●		●
R-28	Sidewalk Details		●		
R-29	Driveway Apron	●		●	●
R-29A	Driveway Apron		●		
R-30	Driveway Layout		●		
R-31	Grade Adjustment Walls		●		
R-32	Street Cross-sections with Sidewalk				●

Part 1 - Roads and Streets (cont'd.)

CONTENTS

SHEET NO.	DESCRIPTION	APPLICABLE TO: KAUAI	HON.	MAUI	HAWAII
R-33	Street Cross-sections without Sidewalk				●
R-34	Road Pavement and Shoulders				●
R-35	Typical Roadway Utility Location with Sidewalk				●
R-36	Typical Roadway Utility Location without Sidewalk				●
R-37	Residential Driveway without Curb and Gutter				●
R-38	Driveway Layout				●
R-39	Non-dedicable Streets				●
R-40	Dry Well Cover				●
R-41	Street Cross-sections with Curb and Gutter	●			
R-42	Street Cross-sections without Curb and Gutter	●			
R-43	Road Pavements and Shoulders	●			
R-44	Cul-de-sac	●			
R-45	Tapered Road Intersection	●			
R-46	Typical Roadway Utility Location	●			
R-47	Space Allocation for Underground Utilities	●			
R-48	Residential Driveway without Curve and Gutter	●			
R-49	Driveway Layouts for Concrete Curb Streets			●	
R-50	Driveway Layouts for Non-curb Streets			●	
R-51	Concrete Driveway with Existing Sidewalk			●	
R-52	Roadway Typical Sections			●	
R-53	Roadway Typical Sections			●	
R-54	Roadway Typical Sections			●	
R-55	Roadway Swales			●	
R-56	Sidewalk Details			●	
R-57	Cul-de-sac			●	
R-58	Space Allocation for Underground Utilities			●	
R-59	Space Allocation for Underground Utilities			●	

Part 2 - Storm Drains

CONTENTS

SHEET NO.	DESCRIPTION	APPLICABLE TO: KAUAI	HON.	MAUI	HAWAII
D-1	Type "A" Catch Basin	●	●	●	●
D-2	Type "A" Catch Basin Reinforcement Details	●	●	●	●
D-3	Type "E" Catch Basin	●	●	●	●
D-4	Type "E" Catch Basin Reinforcement Details	●	●	●	●
D-5	Type "B" Catch Basin	●	●	●	●
D-6	Type "B" Catch Basin Reinforcement Details	●	●	●	●
D-7	Type "F" Catch Basin	●	●	●	●
D-8	Type "F" Catch Basin Reinforcement Details	●	●	●	●
D-9	Type "C" Catch Basin	●	●	●	●
D-10	Type "C" Catch Basin Reinforcement Details	●	●	●	●
D-11	Type "D" Catch Basin	●	●	●	●
D-12	Type "D" Catch Basin Reinforcement Details	●	●	●	●
D-13	Catch Basic Details	●	●	●	●
D-14	Details for Catch Basin with 5" Curb	●	●	●	●
D-15	Deflector Inlet for Catch Basin	●	●	●	●
D-16	Monolithic Construction of Catch Basin Top Slab and Sidewalk	●	●	●	●
D-17	Shallow Drain Manhole for Sidewalk Area	●	●	●	●
D-18	Shallow Drain Manhole for Pavement Area	●	●	●	●
D-19	Pre-cast Top Slab for Shallow Drain Manhole	●	●	●	●
D-20	Concrete Wall Drain Manhole	●	●	●	●
D-21	Brick Wall Drain Manhole	●	●	●	●
D-22	Pre-cast Concrete Drain Manhole	●	●	●	●
D-23	Pre-cast Concrete Drain Manhole Details	●	●	●	●
D-24	Pre-cast Concrete Drain Manhole Details	●	●	●	●
D-25	Pre-cast Concrete Drain Manhole Details	●	●	●	●
D-26	Channelizing Details for Drain Manhole	●	●	●	●
D-27	Rungs for Catch Basins and Manholes	●	●	●	●
D-28	Type "DA" Frame for Catch Basin and Manhole	●	●	●	●
D-29	Type "DB" Frame for Catch Basin and Manhole	●	●	●	●
D-30	Catch Basin and Manhole Cover	●	●	●	●
D-31	Payment Trench Width and Repaving for Drain Pipes	●	●	●	●
D-32	Sidewalk Culvert	●	●	●	●

Part 2 - Storm Drains (cont'd.)

CONTENTS

SHEET NO.	DESCRIPTION	APPLICABLE TO: KAUAI	HON.	MAUI	HAWAII
D-33	Driveway Drainage - Box Culvert				●
D-34	Driveway Drainage - Pipe Culvert				●
D-35	Driveway Drainage - Swale				●
D-36	Type G1 and Type G2 Drainage Inlets	●			
D-37	Type G3 Drainage Inlet	●			
D-38	Type G4 Drainage Inlet	●			
D-39	Standard Frame and Grate	●			
D-40	Local Depression without Curb and Gutter	●			
D-41	Junction Structure B	●		●	●
D-42	Junction Structure C	●		●	●
D-43	Junction Structure D	●		●	●
D-44	Monolithic Catch Basin Connection for Pipes 12" to 72"	●		●	●
D-45	Concrete Collar Details	●		●	●
D-46	Single Box Culverts	●		●	●
D-47	Double Box Culverts	●		●	●
D-48	Triple Box Culverts	●		●	●
D-49	Rectangular Transition	●		●	●
D-50	Circular Transition	●		●	●
D-51	Parapet Details for Box Culverts	●			
D-52	Support for Drain and Sewer Pipes Across Trenches	●		●	●

Part 3 - Sewers

CONTENTS

SHEET NO.	DESCRIPTION	APPLICABLE TO: KAUAI	HON.	MAUI	HAWAII
S-1	Rock Cradle for Sewer Pipe	●	●	●	●
S-2	Concrete Cradle for Vitrified Clay Pipe	●	●	●	●
S-3	Method of Laying Pipe	●	●	●	●
S-4	Pre-cast Concrete Pipe Block	●	●	●	●
S-5	Concrete Jacket, Reinforced Concrete Cradle	●	●	●	●
S-6	Laterals	●	●	●	●
S-7	Advance Riser Connection		●		
S-8	Method of Backfill	●	●	●	●
S-9	Chimney	●	●	●	●
S-10	Index to Sewer Manhole Details	●	●	●	●
S-11	Manhole Notes	●	●	●	●
S-12	Manhole Notes	●	●	●	●
S-13	Pre-cast Concrete Plain Manhole	●	●	●	●
S-14	Pre-cast Concrete Plain Manhole - Section and Alternate Base	●	●	●	●
S-15	Pre-cast Concrete Shallow Drop Manhole	●	●	●	●
S-16	Pre-cast Concrete Shallow Drop Manhole - Butt Joint Details	●	●	●	●
S-17	Pre-cast Concrete Drop Manhole	●	●	●	●
S-18	Pre-cast Concrete Drop Manhole - Sections	●	●	●	●
S-19	Pre-cast Concrete Plain Manhole for 27" to 48" R.C. Pipe	●	●	●	●
S-20	Pre-cast Concrete Plain Manhole for 27" to 48" R.C. Pipe - Section	●	●	●	●
S-21	Pre-cast Concrete Manhole Wall	●		●	●
S-22	Pre-cast Concrete Eccentric Manhole Cone	●	●	●	●
S-23	Pre-cast Concrete Manhole Wall to Brick Wall Adapter Ring	●	●	●	●
S-24	Pre-cast Concrete Manhole Wall Joints	●	●	●	●
S-25	Pre-cast Concrete Manhole - Detail at Top Rung	●	●	●	●
S-26	Brick Manhole	●	●	●	●
S-27	Plain Manhole	●	●	●	●
S-28	Shallow Drop Manhole	●	●	●	●
S-29	Drop Manhole	●	●	●	●
S-30	Drop Manhole - Sections	●	●	●	●
S-31	Manhole Cover - Type SA	●	●	●	●
S-32	Manhole Frame - Type SA	●	●	●	●
S-33	Manhole Cover - Type SB, Top View	●	●	●	●
S-34	Manhole Cover - Type SB, Bottom View	●	●	●	●

CONTENTS

Part 3 - Sewers (cont'd.)

SHEET NO.	DESCRIPTION	APPLICABLE TO: KAUAI	HON.	MAUI	HAWAII
S-35	Manhole Frame - Type SB	●	●	●	●
S-36	Modified Type SB Pressure Manhole Frame and Cover	●	●	●	●
S-37	Pressure Manhole Cover - Type SC	●	●	●	●
S-38	Pressure Manhole Cover - Type SC	●	●	●	●
S-39	Pressure Manhole Frame and Cover - Type SC	●	●	●	●
S-40	Manhole Frame - Type SD	●	●	●	●
S-41	Drop Manhole Chimney Casting	●	●	●	●
S-42	Manhole Rung Details - Type SA	●	●	●	●
S-43	Manhole Rung Details - Type SC	●	●	●	●
S-44	Manhole Rung Details - Type SD	●	●	●	●
S-45	Manhole Rung Details - Type SE	●	●	●	●
S-46	Manhole Rung Details - Type SF	●	●	●	●
S-47	PVC Pipe - Bedding Requirements	●	●	●	●
S-48	PVC Pipe - Resilient Manhole Connection	●	●	●	●

CONTENTS

Part 4 - Sewer Pump Stations & Treatment Plants

SHEET NO.	DESCRIPTION	APPLICABLE TO: KAUAI	HON.	MAUI	HAWAII
P-1	Backflow Preventer	●	●		
P-2	Fence and Gate Details	●	●		
P-3	Oil Seals and Related Piping	●	●		
P-4	Oil Seals and Related Piping	●	●		
P-5	Oil Seals and Related Piping	●	●		
P-6	Removable Post and Chain Details	●	●		
P-7	Removable Railing Details	●	●		
P-8	Typical Wall Sleeve	●	●		
P-9	Sprinkler Valve Control	●	●		
P-10	Motor Shaft and Coupling	●	●		
P-11	Typical Pump Motor Drive Shaft Guard		●		
P-12	Typical Pump Coupling Guard		●		
P-13	Typical Horizontal Shaft Guard No. 1		●		
P-14	Typical Horizontal Shaft Guard No. 2		●		
P-15	Safety Guard General Notes		●		
P-16	1-1/2" Stand Pipe Detail		●		

Part 5 · Traffic

CONTENTS

SHEET NO.	DESCRIPTION	APPLICABLE TO: KAUAI	HON.	MAUI	HAWAI
T-1	Street Name and Stop Sign Details			●	●
T-2	Height and Lateral Location of Sign	●		●	●
T-3	Typical Locations for Stop Signs	●		●	●
T-4	Typical Detail for Crosswalk and Stop Lines				●
T-5	Typical Sign Installations in Cul-de-sacs			●	●
T-6	Road Marker	●		●	●
T-7	Raised Pavement Markers	●		●	●
T-8	Typical Installation of Raised Pavement Markers	●		●	●
T-9	Typical Intersection Detail for Striping	●		●	●
T-10	Striping Details	●			
T-11	Street Name and Stop Sign Details	●			
T-12	Parking Design Standard, One-Way Traffic	●			
T-13	Parking Design Standard, Two-Way Traffic	●			
T-14	Standard Street Name Sign			●	

STANDARD DETAILS for Public Works Construction

September 1984

Roads & Streets

PART

1

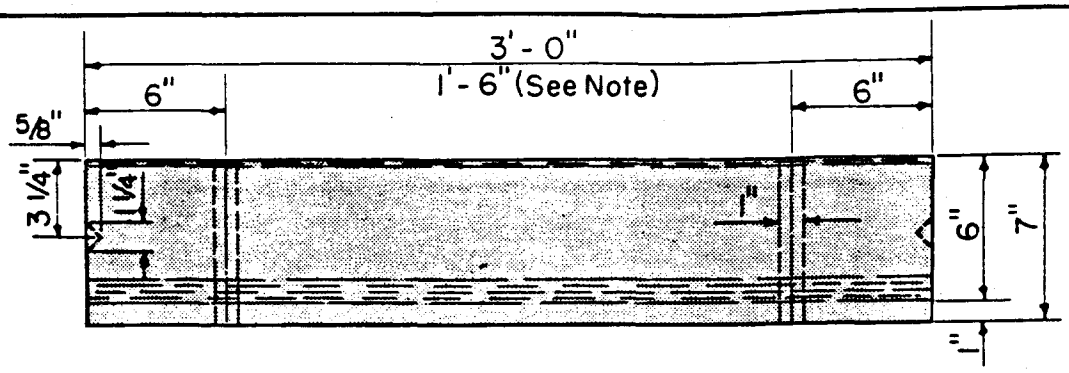

PLAN

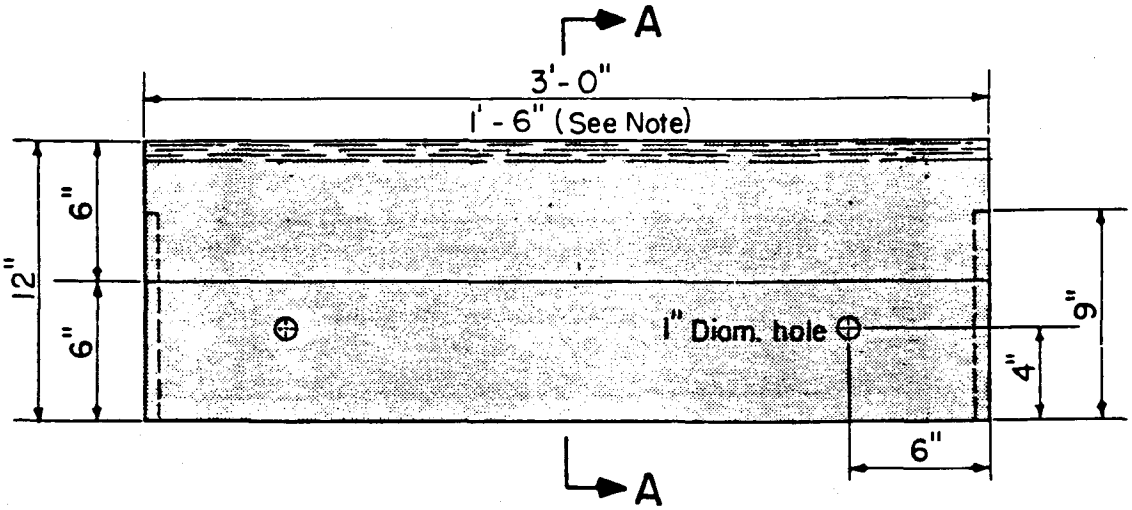

ELEVATION

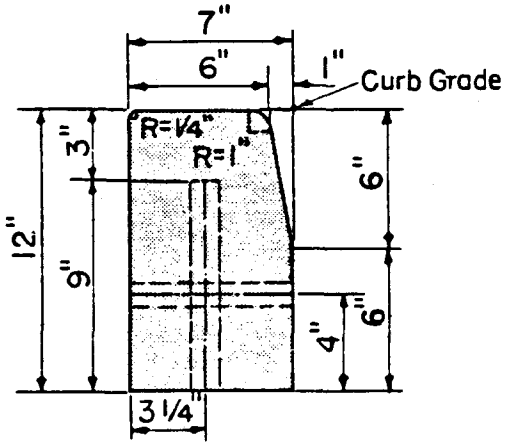

NOTE:
For curb returns use 1'-6" pre-cast concrete curbs.

SECTION A - A

PRE-CAST CONCRETE CURB

COUNTY OF KAUAI CITY & COUNTY OF HONOLULU COUNTY OF MAUI COUNTY OF HAWAII	PRE-CAST CONCRETE CURB SCALE: 1-1/2" = 1'-0" SEPTEMBER 1984	STANDARD DETAILS	R-1

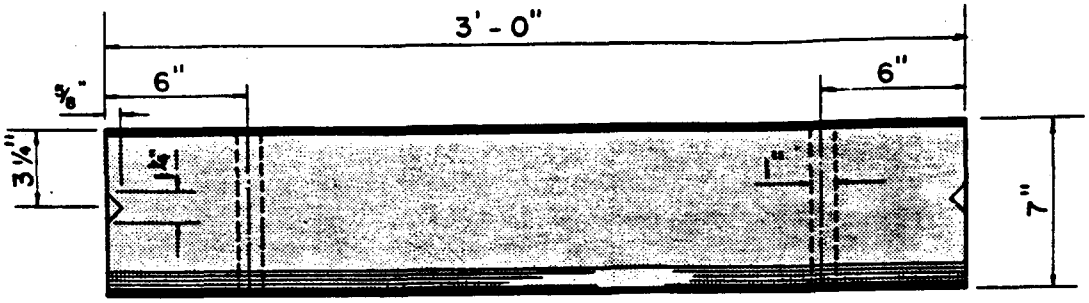

PLAN

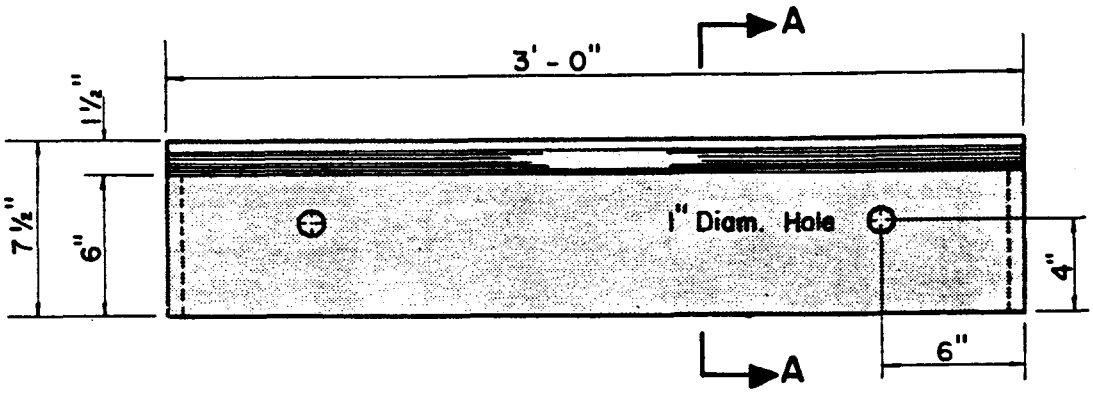

ELEVATION

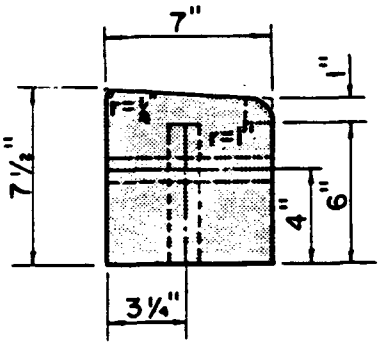

SECTION A-A

PRE-CAST CONCRETE DRIVEWAY CURB

R-2	STANDARD DETAILS	PRE-CAST CONCRETE DRIVEWAY CURB SEPTEMBER 1984 SCALE: 1-1/2" = 1'-0"	COUNTY OF KAUAI CITY & COUNTY OF HONOLULU COUNTY OF MAUI COUNTY OF HAWAII

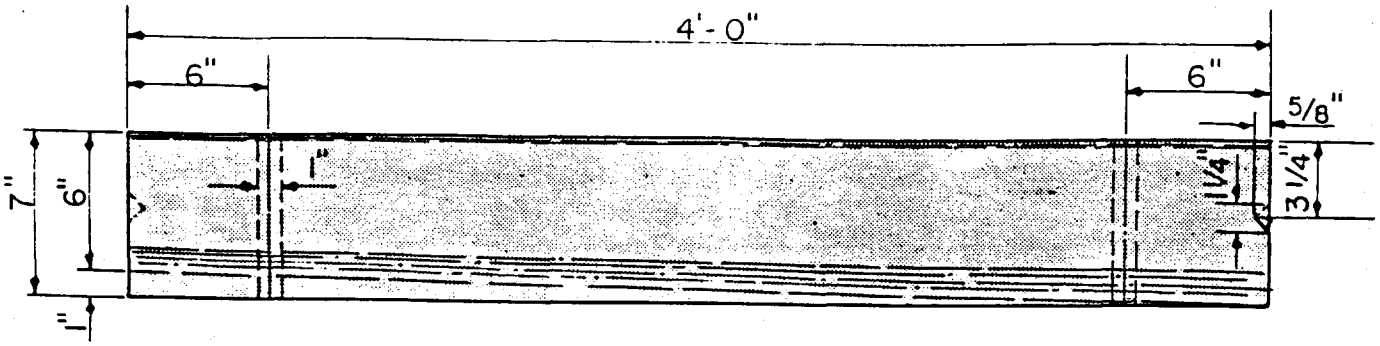

PLAN

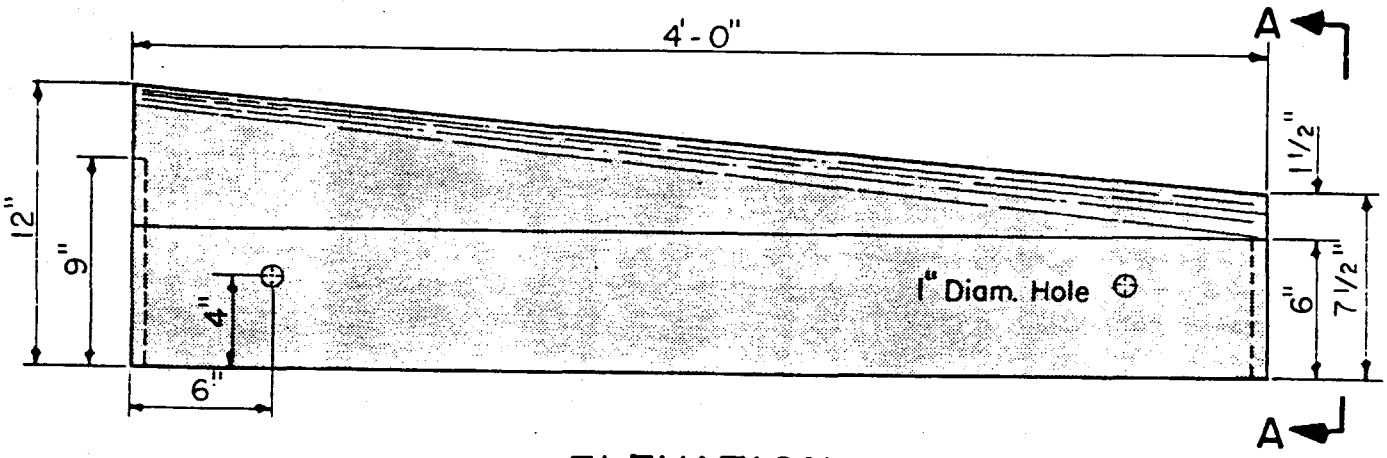

ELEVATION

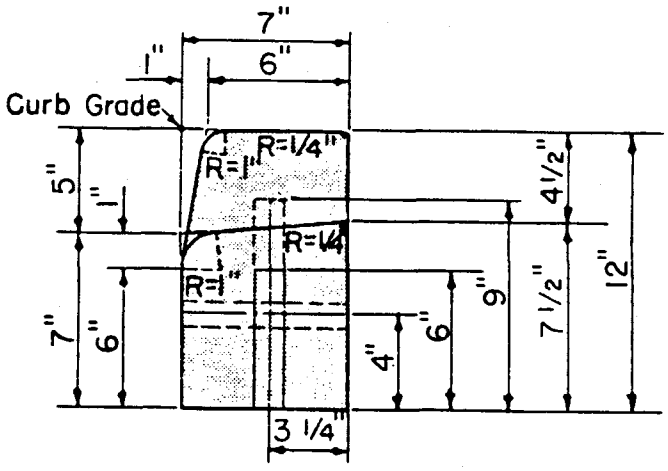

SECTION A-A

PRE-CAST CONCRETE DROP CURB BLOCK

COUNTY OF KAUAI CITY & COUNTY OF HONOLULU COUNTY OF MAUI COUNTY OF HAWAII	PRE-CAST CONCRETE DROP CURB BLOCK SCALE: 1-1/2" = 1'-0" SEPTEMBER 1984	STANDARD DETAILS	R-3

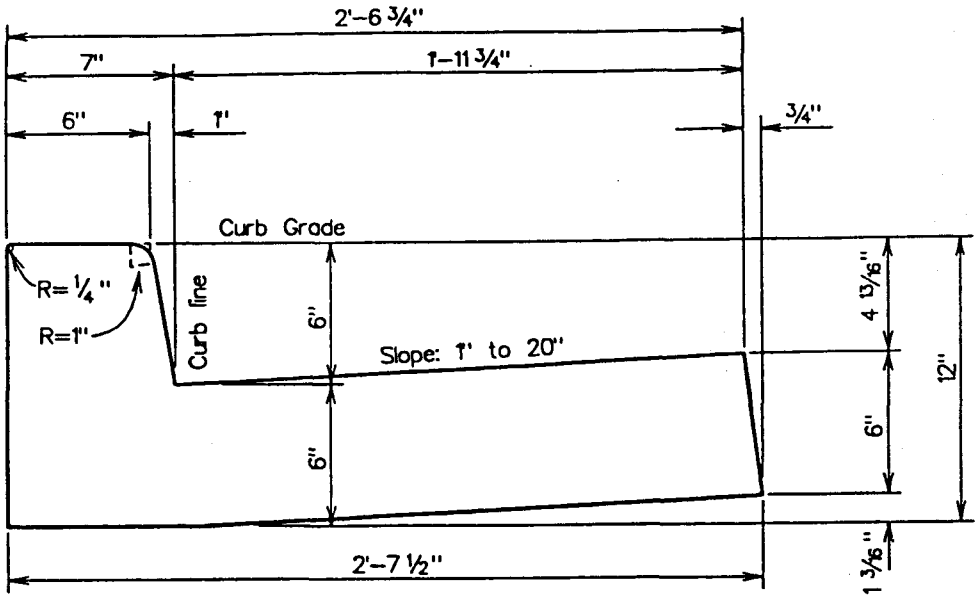

Class "A" Concrete quantity = 0.0584 cu. yd./lin. ft.

CAST IN PLACE INTEGRAL CURB AND GUTTER

Scale: 1 1/2" = 1'-0"

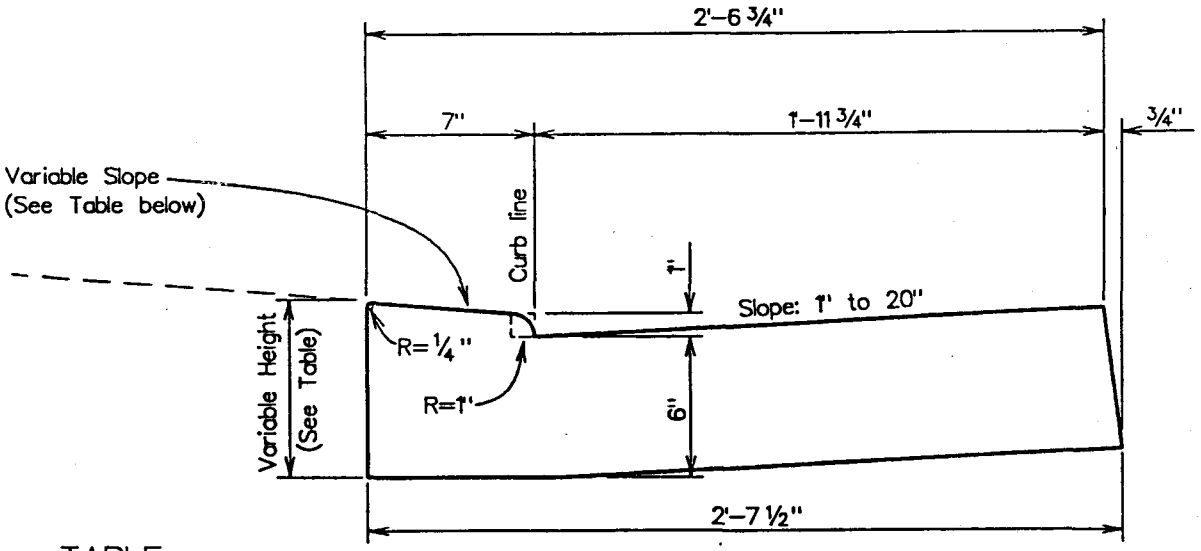

Class "A" Concrete quantity = 0.0506 cu. yd./lin. ft.

TABLE

DIST. CURB LINE TO ℄	SLOPE	HEIGHT
12'	11/16" to 12"	7 3/8"
10'	3/4" to 12"	7 7/16"
8'	7/8" to 12"	7 1/2"
7'	15/16" to 12"	7 9/16"
6'	1 1/16" to 12"	7 5/8"
3'	1 15/16" to 12"	8 1/8"

CAST IN PLACE INTEGRAL DRIVEWAY CURB AND GUTTER

Scale: 1 1/2" = 1'-0"

R-4 REVISED	STANDARD DETAILS	INTEGRAL CURB AND GUTTER INTEGRAL DRIVEWAY CURB AND GUTTER JANUARY 1995 SCALE: 1-1/2" = 1'-0"	COUNTY OF KAUAI CITY & COUNTY OF HONOLULU COUNTY OF MAUI COUNTY OF HAWAII

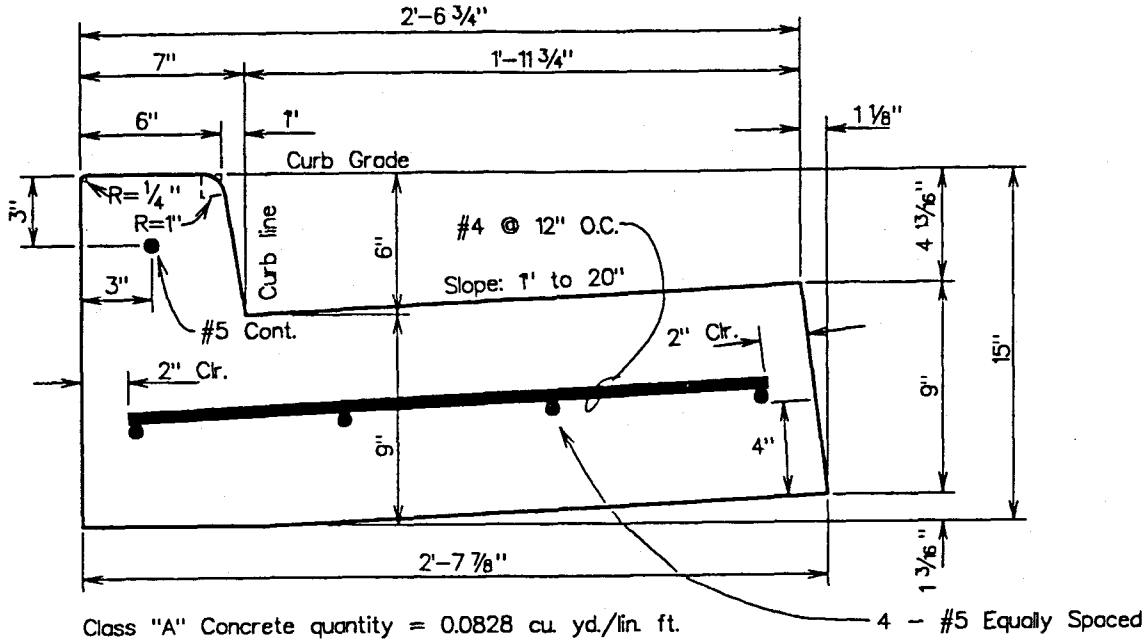

Class "A" Concrete quantity = 0.0828 cu. yd./lin. ft.

CAST IN PLACE INTEGRAL CURB AND GUTTER

Scale: 1 1/2" = 1'-0"

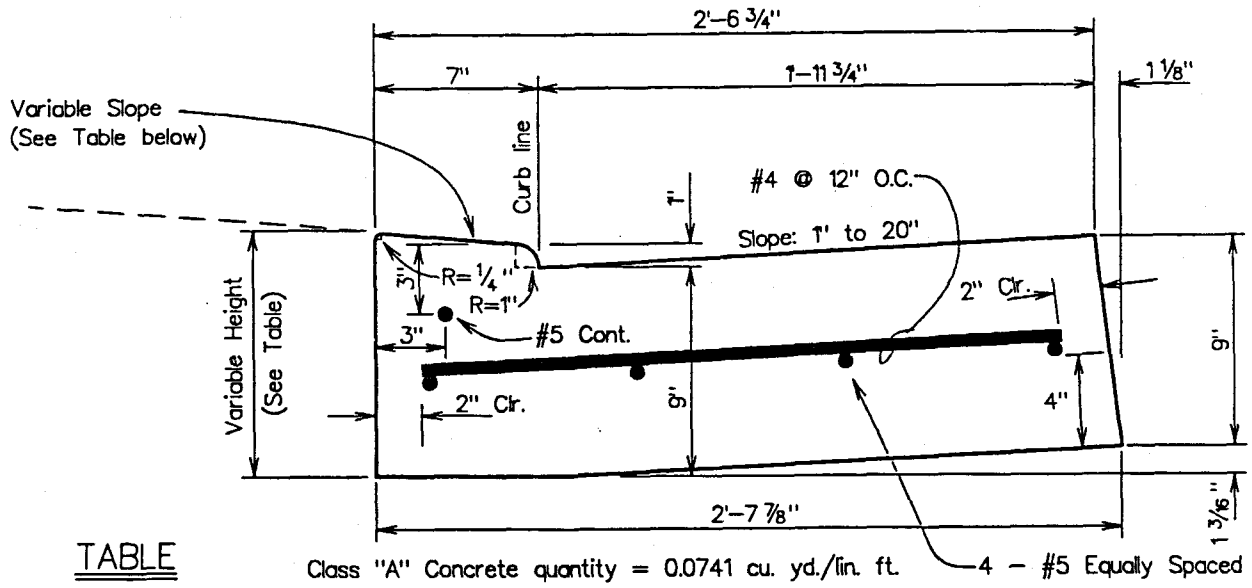

Class "A" Concrete quantity = 0.0741 cu. yd./lin. ft.

TABLE

DIST. CURB LINE TO ℄	SLOPE	HEIGHT
12'	11/16" to 12"	10 3/8"
10'	3/4" to 12"	10 7/16"
8'	7/8" to 12"	10 1/2"
7'	15/16" to 12"	10 9/16"
6'	1 1/16" to 12"	10 5/8"
3'	1 15/16" to 12"	11 1/8"

CAST IN PLACE INTEGRAL DRIVEWAY CURB AND GUTTER

Scale: 1 1/2" = 1'-0"

NOTE:

Use this detail also at catch basins. Modify reinforcing between gutter and catch basin walls, as required.

CITY & COUNTY OF HONOLULU	INTEGRAL CURB AND GUTTER INTEGRAL DRIVEWAY CURB AND GUTTER FOR R/W OF 70' OR MORE SCALE: 1-1/2" = 1'-0" JANUARY 1995	STANDARD DETAILS	R-4A REVISED

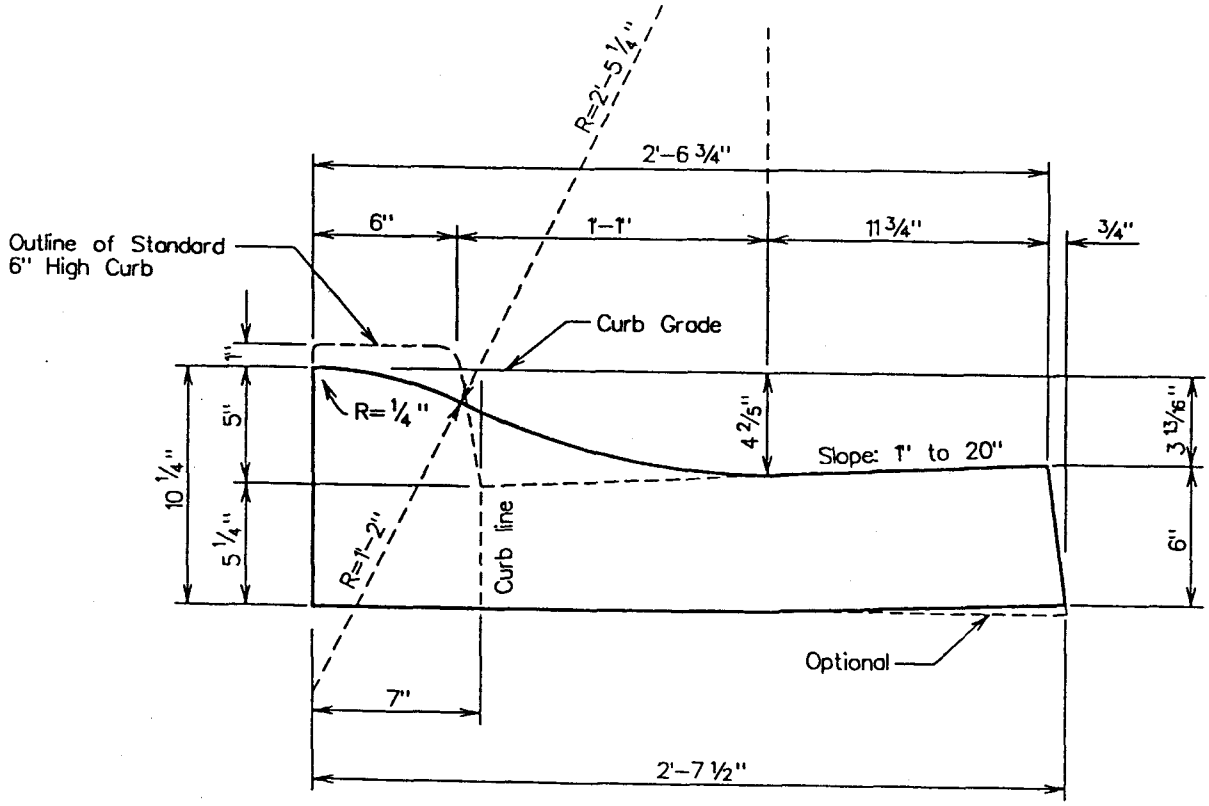

Class "A" Concrete quantity = 0.0565 cu. yd./lin. ft.

CAST IN PLACE ROLLED CURB

Scale: 1 1/2" = 1'-0"

NOTES

1. Rolled curb shall not be permitted:
   a. Where road gradients are greater than 10 percent.
   b. On other than minor streets in residential zones.
   c. At major intersections, bridges and approaches.
2. For transition lengths to standard vertical curb, see R-6.

CITY & COUNTY OF HONOLULU COUNTY OF MAUI COUNTY OF HAWAII	ROLLED CURB SCALE 1 1/2" = 1'-0" JANUARY 1995	STANDARD DETAILS	R-5 REVISED

STREET GRADE	TRANSITION LENGTH*
0.6 %	16' Min.
0.7 %	12' "
0.8 %	10' "
0.9%	9' "
1.0%	8' "
1.1 %	7' "
1.2-10.0%	6' "

TABLE

* Apply to 5" and 6" curbs

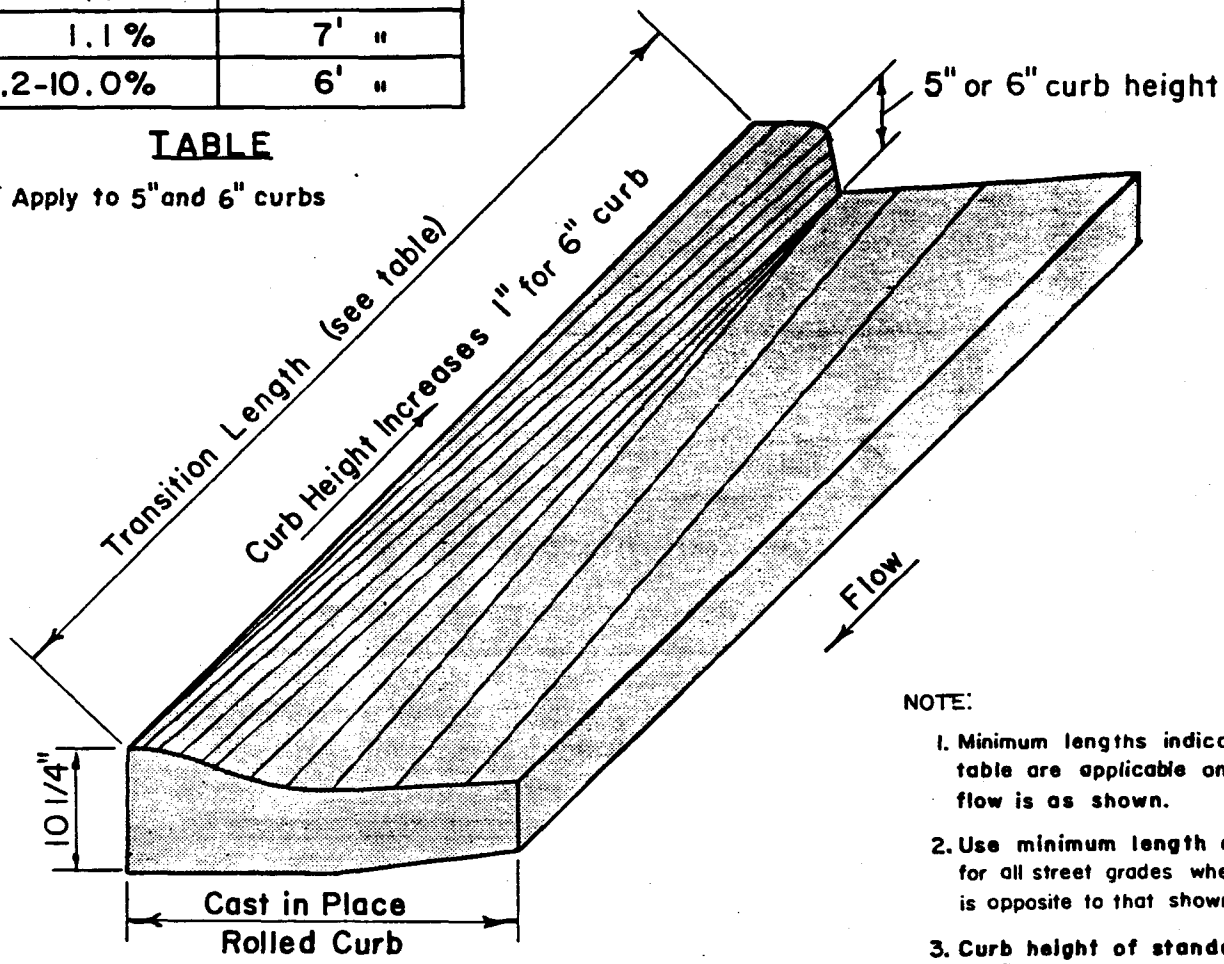

NOTE:

1. Minimum lengths indicated in table are applicable only when flow is as shown.
2. Use minimum length of 6' for all street grades when flow is opposite to that shown.
3. Curb height of standard curb is 1" higher than rolled curb.
4. Use 8' at upstream side and 4' at downstream side for transition to catchbasin with 5" curb height.

ROLLED CURB TRANSITION

NOT TO SCALE

R-6	STANDARD DETAILS	ROLLED CURB TRANSITION TO CURBS AND CATCH BASINS SEPTEMBER 1984 NOT TO SCALE	COUNTY OF KAUAI CITY & COUNTY OF HONOLULU COUNTY OF MAUI COUNTY OF HAWAII

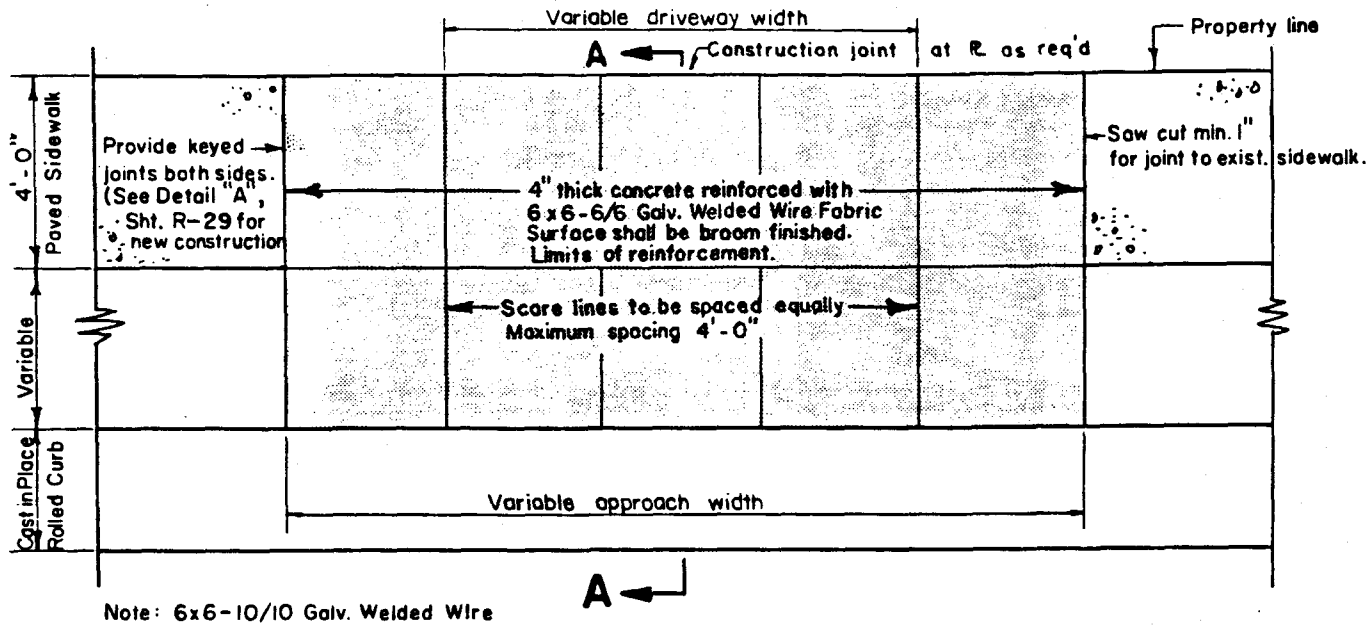

Note: 6x6-10/10 Galv. Welded Wire Fabric permitted for Hawaii, Kauai & Maui only.

PLAN

SCALE: 1/4" = 1'-0"

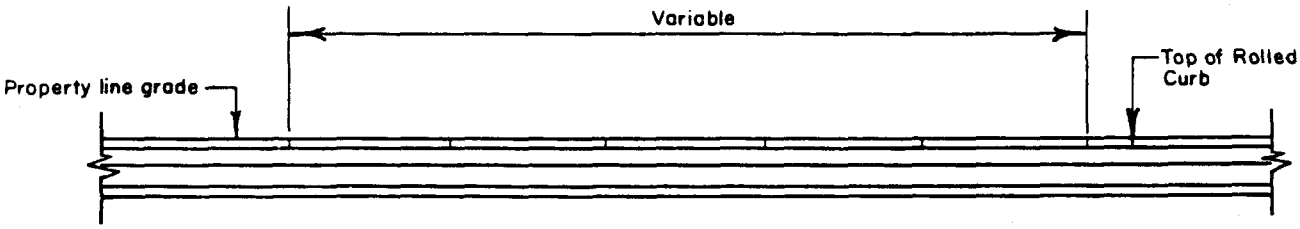

ELEVATION

SCALE: 1/4" = 1'-0"

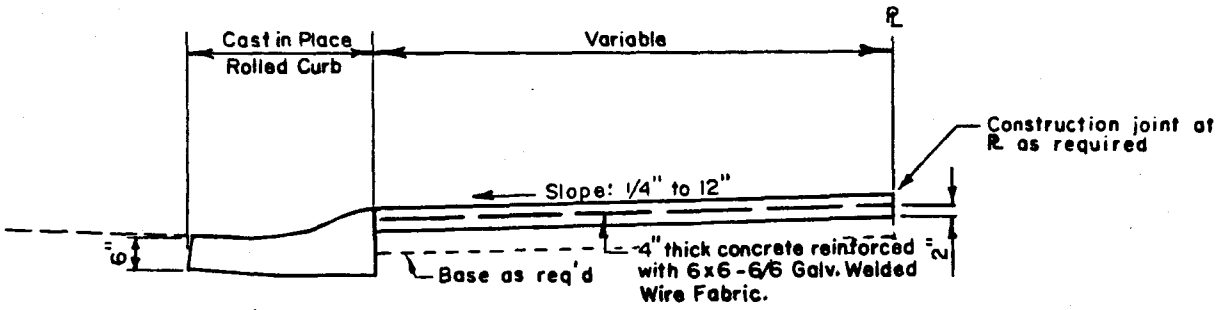

SECTION A-A

SCALE: 3/8" = 1'-0"

DRIVEWAY APRON WITH CAST IN PLACE ROLLED CURB

(RESIDENTIAL ZONE)

COUNTY OF KAUAI CITY & COUNTY OF HONOLULU COUNTY OF MAUI COUNTY OF HAWAII	DRIVEWAY APRON WITH ROLLED CURB SCALE: AS NOTED SEPTEMBER 1984	STANDARD DETAILS	R-7

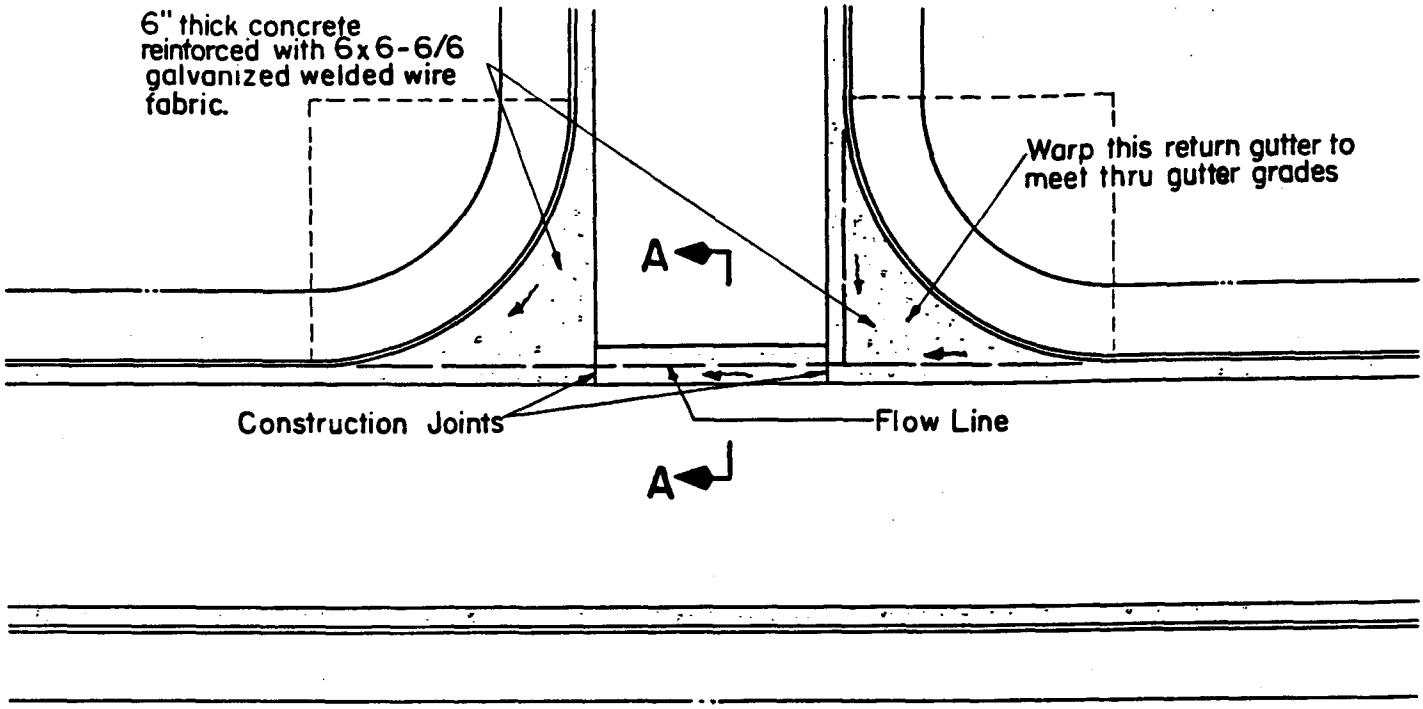

PLAN

SCALE: 1" = 20'

NOTE:
Construction joints shall be keyed construction joints with tie bars per detail on sheet R-11

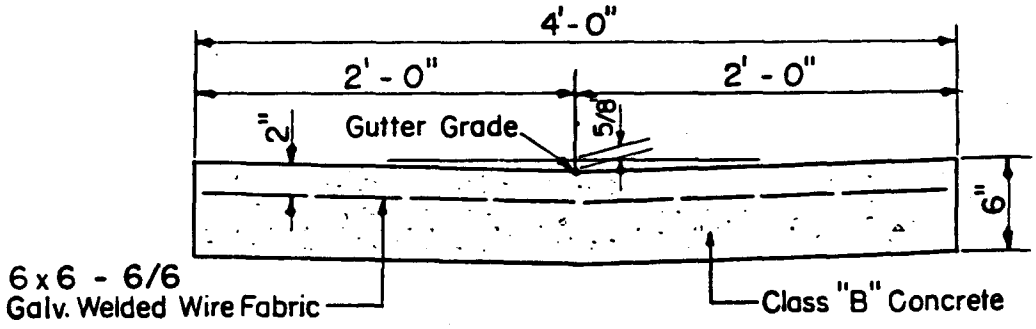

SECTION A-A

SCALE: 1" = 1'-0"

THRU GUTTER

R-8	STANDARD DETAILS	THRU GUTTER SEPTEMBER 1984 SCALE: AS NOTED	COUNTY OF KAUAI CITY & COUNTY OF HONOLULU COUNTY OF MAUI COUNTY OF HAWAII

COUNTY OF KAUAI
CITY & COUNTY OF HONOLULU
COUNTY OF MAUI
COUNTY OF HAWAII

SCALE: AS NOTED

CONCRETE PAVEMENT

SEPTEMBER 1984

STANDARD DETAILS

R-9

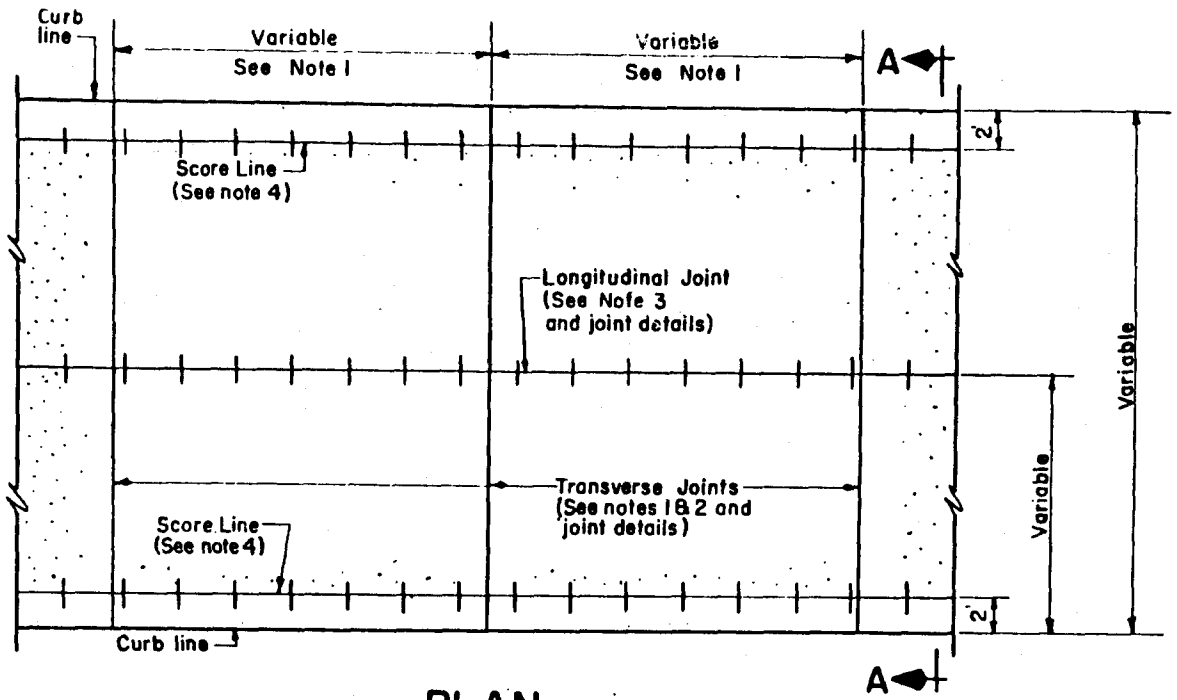

PLAN

SCALE: 1" = 1'-0"

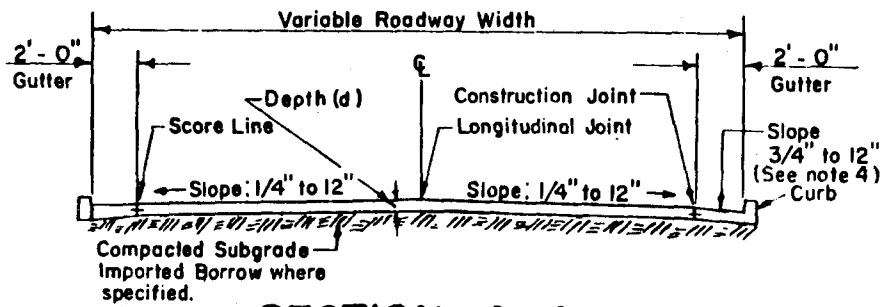

SECTION A-A

SCALE: 1/8" = 1'-0"

CONSTRUCTION NOTES

1. Transverse joints shall be either weakened plane contraction joints or construction joints with dowels and shall be evenly spaced approximately 15 feet apart.
2. Expansion joints with dowels shall be located at intersections only.
3. Longitudinal joints shall be either weakened plane joints or keyed construction joints with tie bars. Maximum spacing between joints shall be as provided in the Standard Specifications.
4. Gutters constructed monolithically with the pavement shall be delineated with a score line. Gutters constructed separately shall have a longitudinal keyed construction joint with tie bars. Tie bars shall also be provided where gutters are constructed monolithically. For monolithic gutters, slope shall be 1/4" to 12".
5. Gutters on grades at 12% or less shall be steel trowel finished and gutters on grades greater than 12% shall be broom finished longitudinally.
6. Pavement on grades at 12% or less shall be broom finished transversely and pavement on grades greater than 12% shall be bristle brush finished.

CONCRETE PAVEMENT

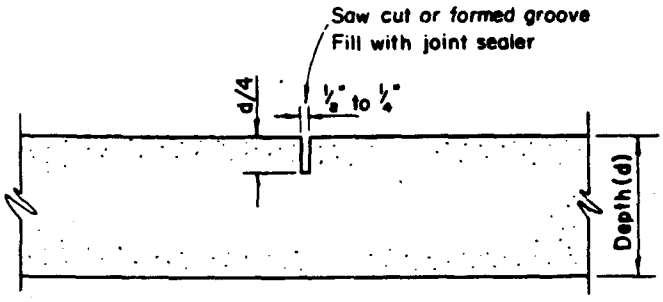

TRANSVERSE CONTRACTION JOINT

Scale : 1½" = 1'-0"

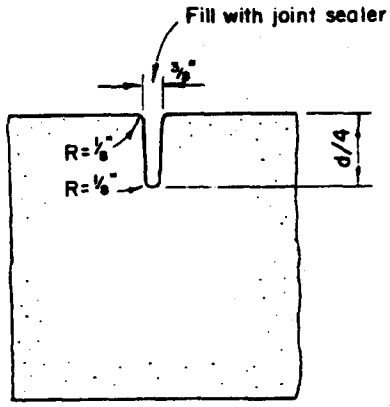

DUMMY GROOVE JOINT DETAIL "A"

Scale: 3" = 1'-0"

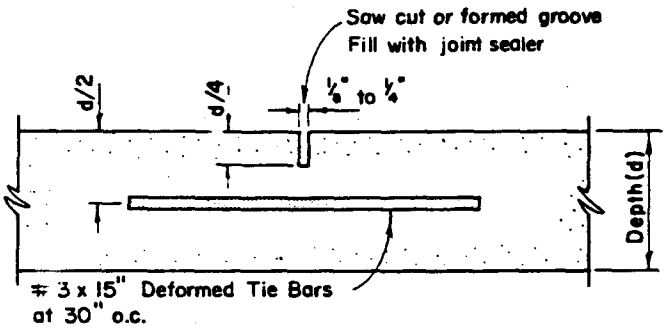

LONGITUDINAL JOINT

Scale: 1½" = 1'-0"

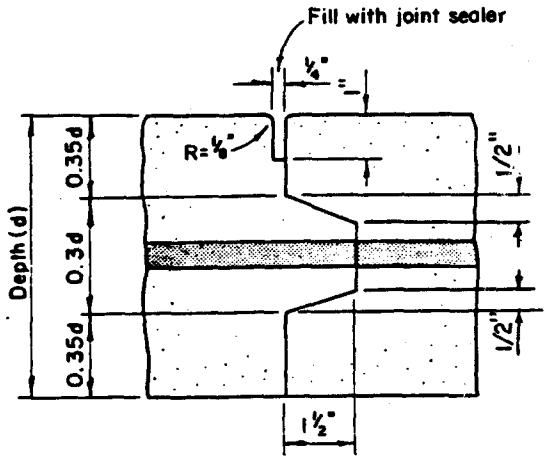

DETAIL "B"

Scale: 3" = 1'-0"

CONSTRUCTION NOTES

1. Weakened plane joints may be constructed by sawing, forming dummy groove (see Detail "A") or inserting ribbon or premolded strip.
2. All joints shall be slightly under filled with joint sealer paving asphalt, grade 85-100, AASHTO Designation : M-20
3. All dowels shall be paint and greased. Expansion joint dowels shall be equipped with metal caps.
4. Expansion joints without dowels shall be constructed at junctions of concrete pavement and rectangular structure.
5. Construction joints at unplanned locations shall be keyed joints with tie bars (Detail "B").

R-10	STANDARD DETAILS	CONCRETE PAVEMENT JOINT DETAILS SEPTEMBER 1984 SCALE: AS NOTED	COUNTY OF KAUAI CITY & COUNTY OF HONOLULU COUNTY OF MAUI COUNTY OF HAWAII

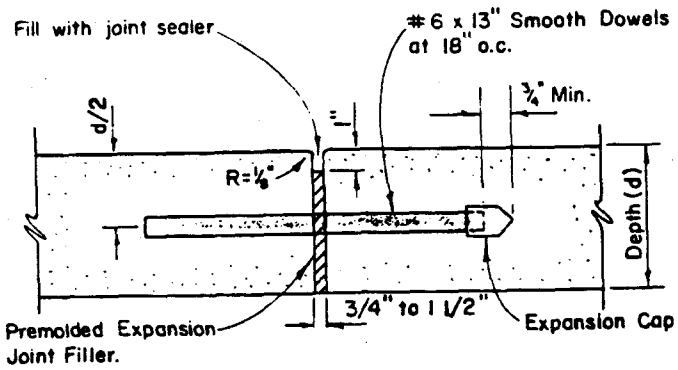

EXPANSION JOINT WITH DOWELS

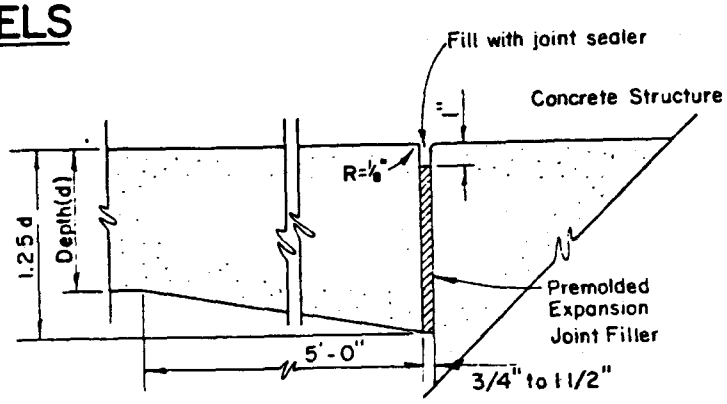

EXPANSION JOINT

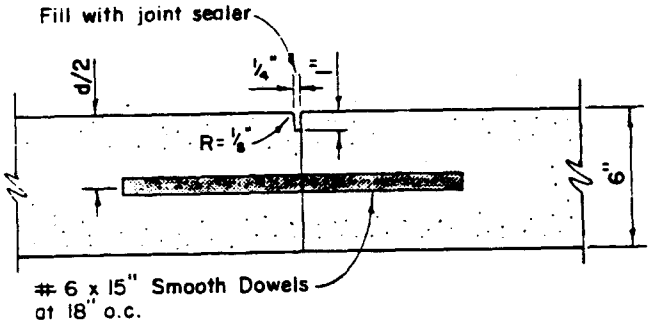

TRANSVERSE CONSTRUCTION JOINT WITH DOWELS

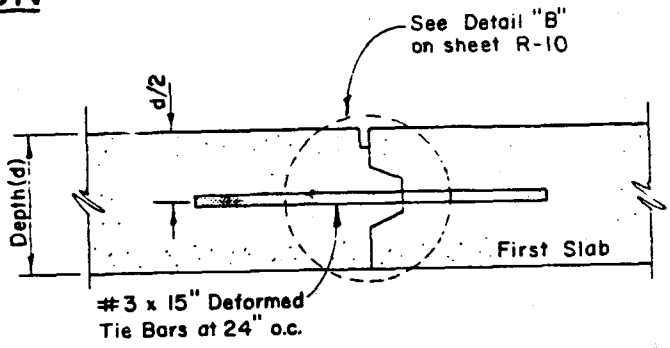

LONGITUDINAL AND TRANSVERSE KEYED CONSTRUCTION JOINT WITH TIE BARS

COUNTY OF KAUAI CITY & COUNTY OF HONOLULU COUNTY OF MAUI COUNTY OF HAWAII	CONCRETE PAVEMENT JOINT DETAILS SCALE: 1-1/2" = 1'-0" SEPTEMBER 1984	STANDARD DETAILS	R-11

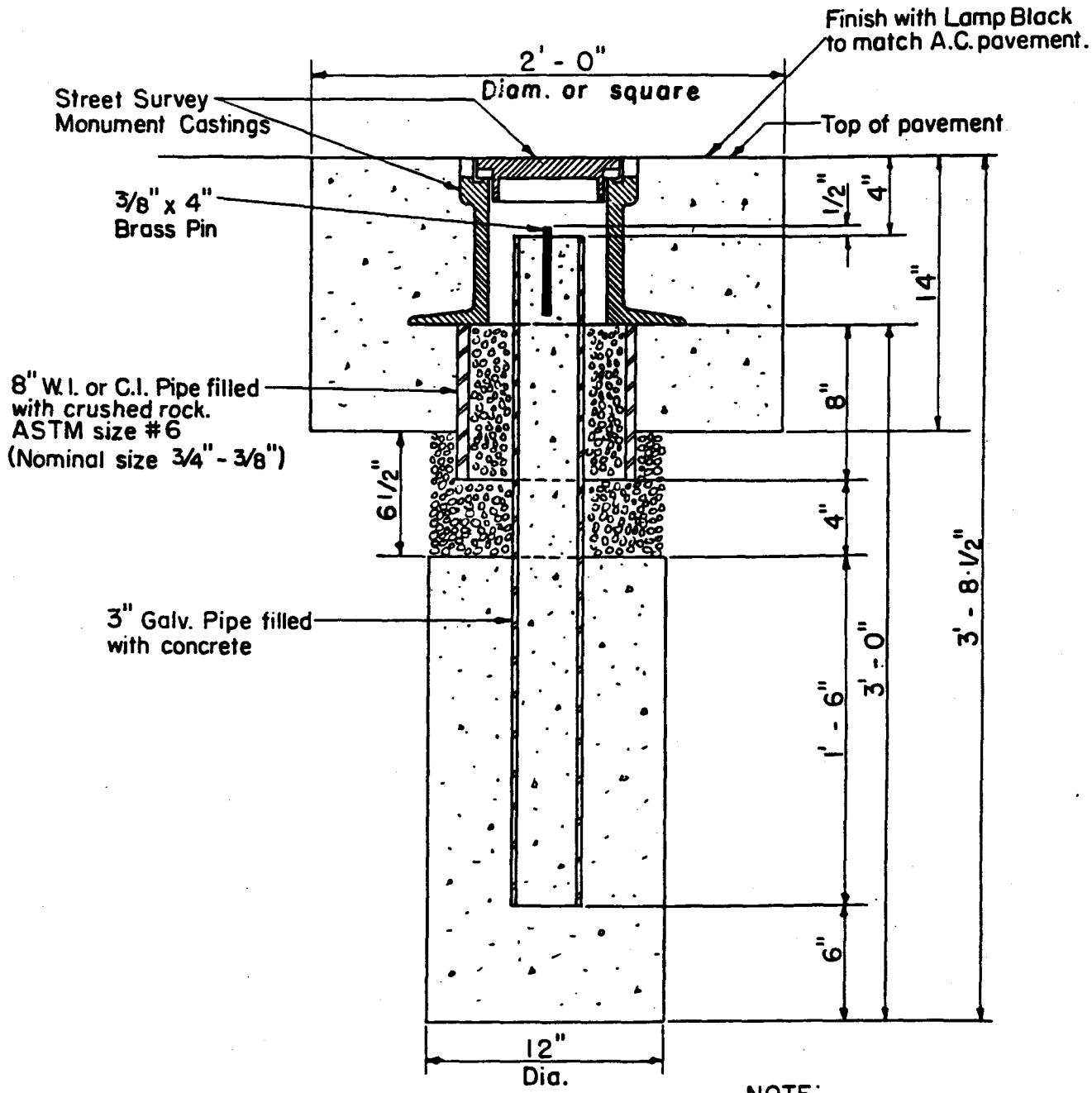

NOTE:

Where the excavation extends into solid rock the depth may be decreased if approved by the Engineer.

STREET SURVEY MONUMENT

SCALE: 1 1/2" = 1' - 0"

R-12	STANDARD DETAILS	STREET SURVEY MONUMENT SEPTEMBER 1984 SCALE: 1-1/2" = 1'-0"	COUNTY OF KAUAI CITY & COUNTY OF HONOLULU COUNTY OF MAUI COUNTY OF HAWAII

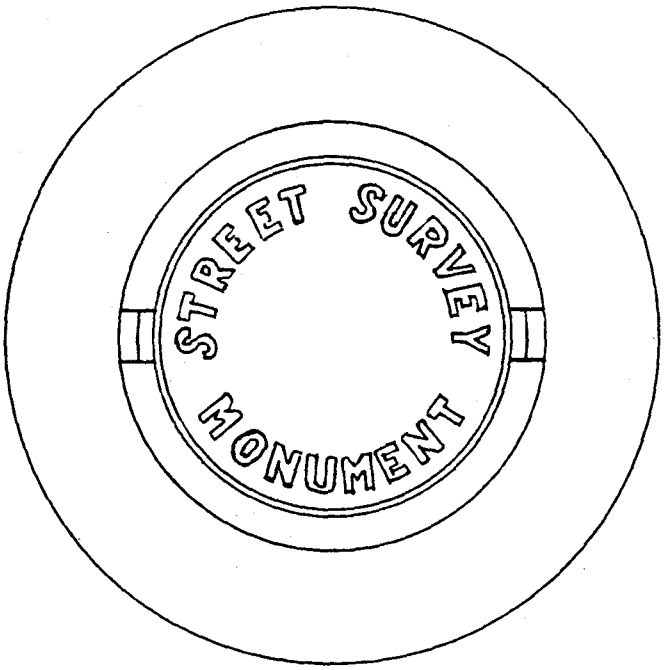

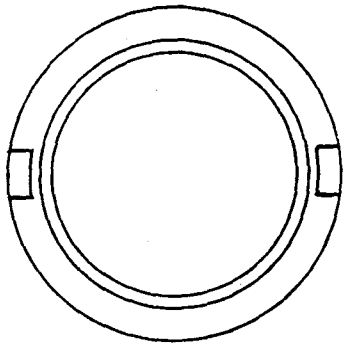

BOTTOM VIEW OF COVER

TOP VIEW - STREET SURVEY MONUMENT FRAME AND COVER

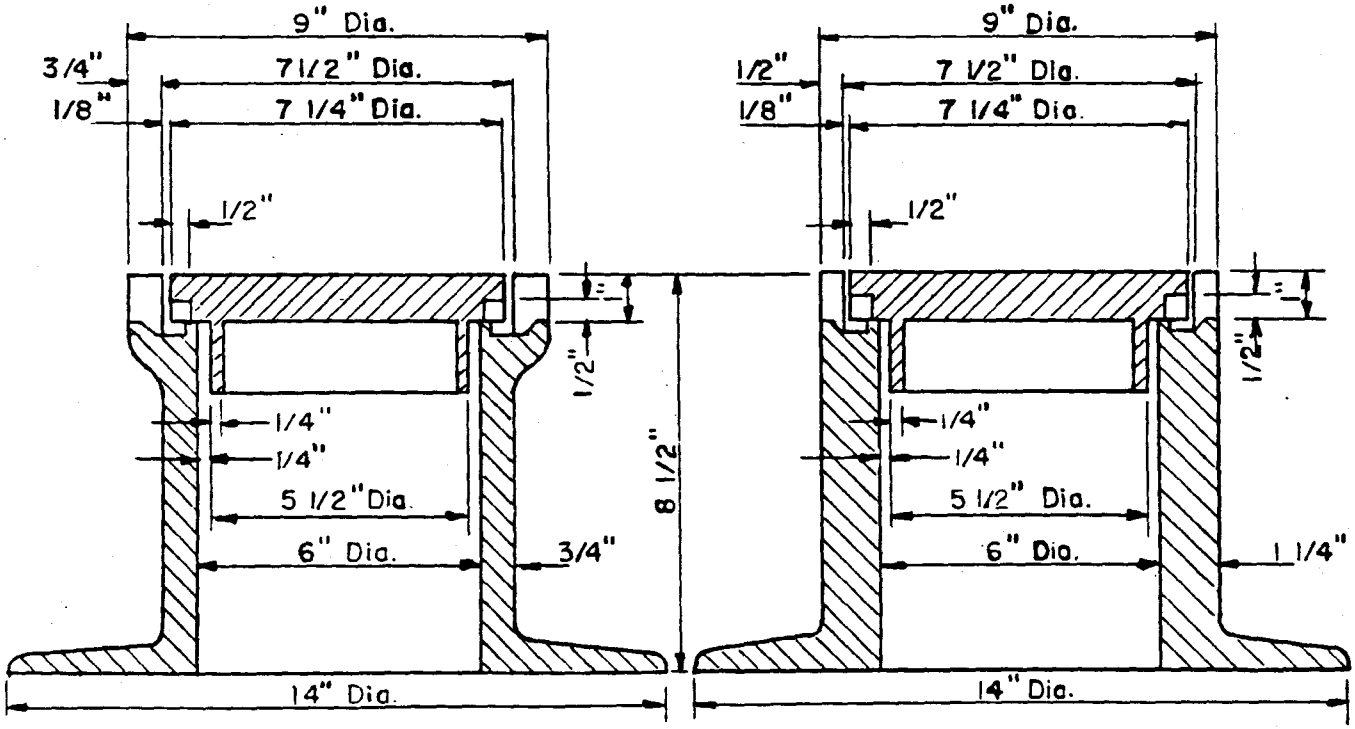

SECTIONAL VIEW OF FRAME AND COVER

SECTIONAL VIEW OF ALTERNATE FRAME & COVER

STREET SURVEY MONUMENT CASTINGS

COUNTY OF KAUAI CITY & COUNTY OF HONOLULU COUNTY OF MAUI COUNTY OF HAWAII	STREET SURVEY MONUMENT CASTINGS SCALE: 3" = 1'-0" SEPTEMBER 1984	STANDARD DETAILS	R-13

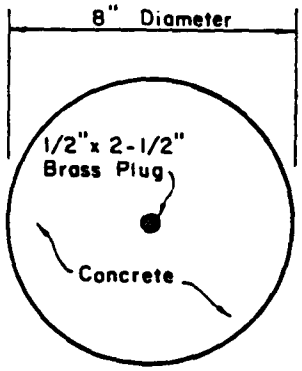

PLAN

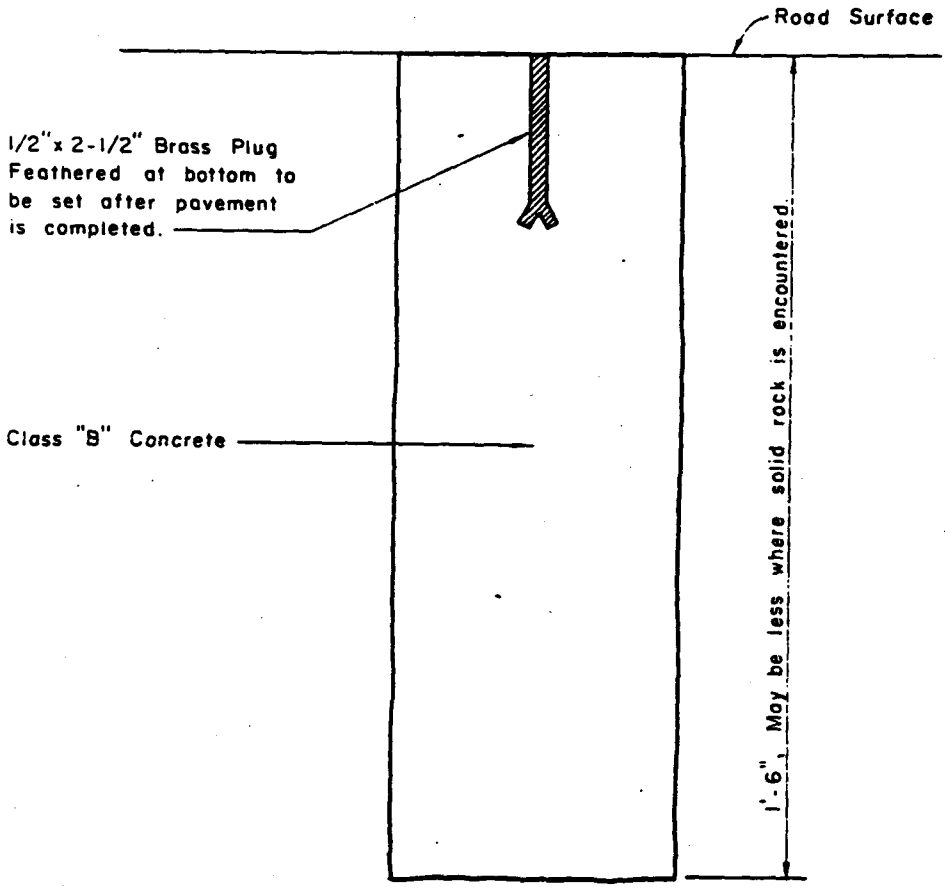

ELEVATION

CENTERLINE MONUMENT

R-14	STANDARD DETAILS	CENTERLINE MONUMENT SEPTEMBER 1984 NOT TO SCALE	COUNTY OF KAUAI CITY & COUNTY OF HONOLULU COUNTY OF MAUI COUNTY OF HAWAII

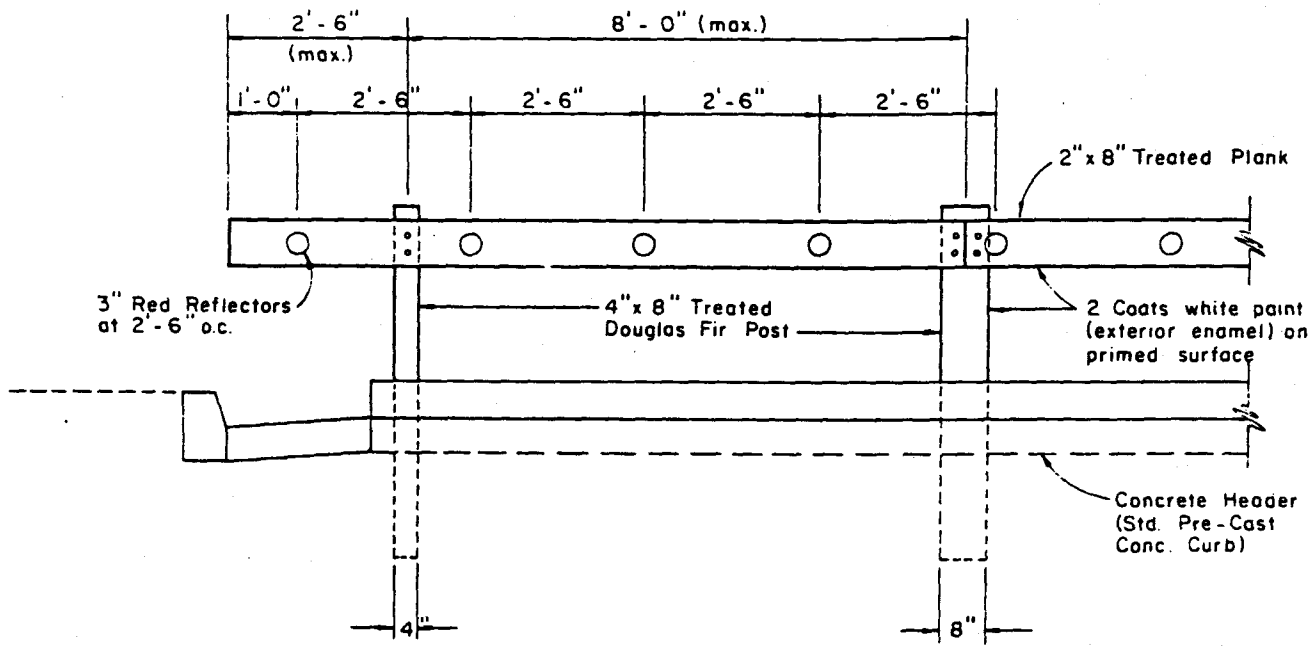

ELEVATION

NOTE:

1. Reflectors shall be "paste-on" type.
2. Treatment shall be for termites and wood rot.

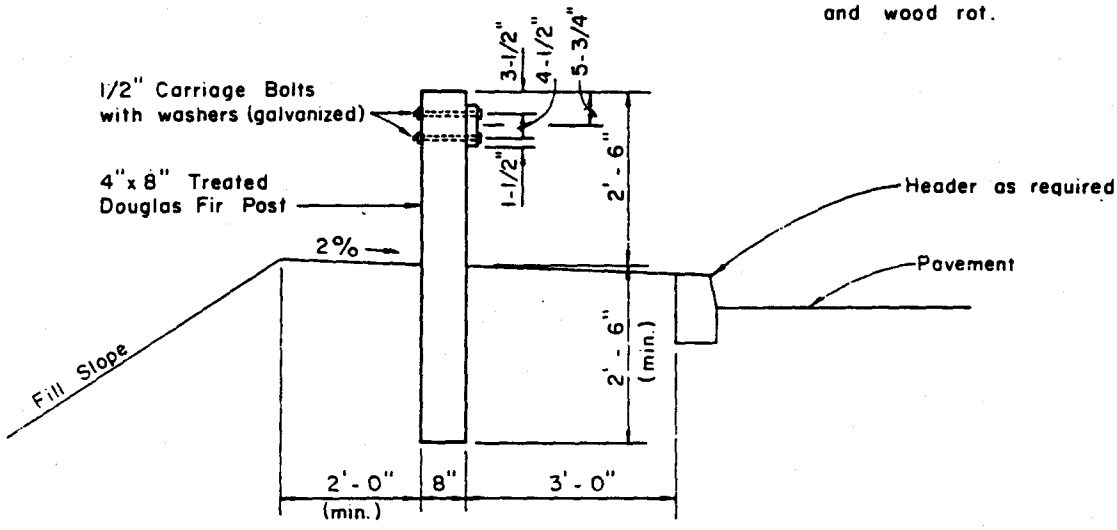

SIDE ELEVATION

TEMPORARY WOODEN BARRICADE

COUNTY OF KAUAI CITY & COUNTY OF HONOLULU COUNTY OF MAUI COUNTY OF HAWAII	TEMPORARY WOODEN BARRICADE SCALE: 3/8" = 1'-0" SEPTEMBER 1984	STANDARD DETAILS	R-15

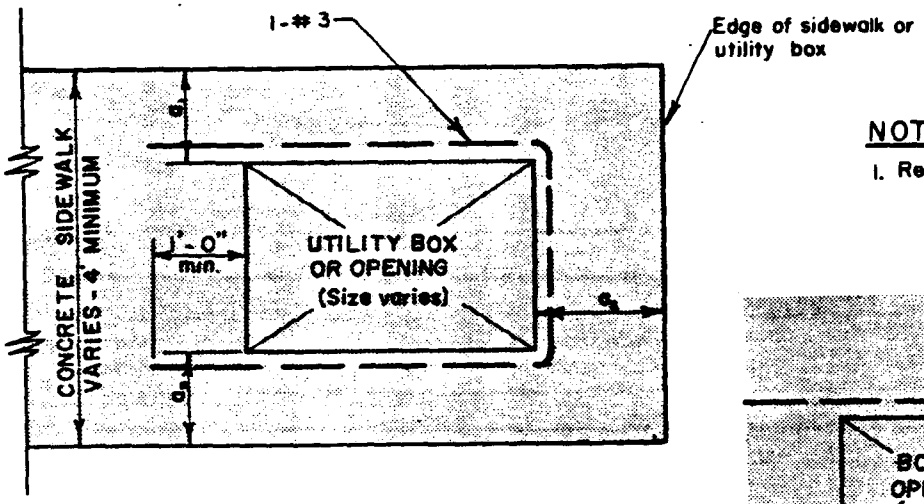

PLAN

OPENING WITHIN SIDEWALK

SCALE: 1/2" = 1'-0"

NOTE

1. Reinf. bars not required where $a_1, a_2, a_3 > 2'-0"$

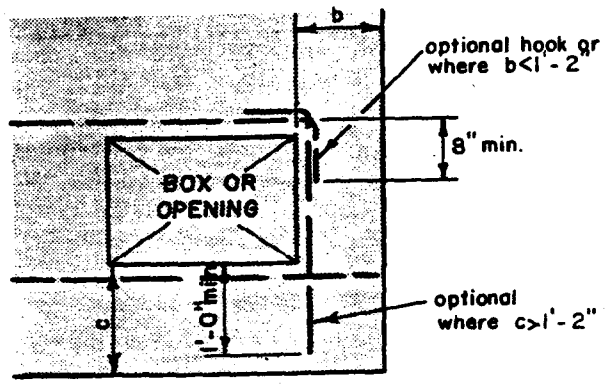

OPTIONAL BAR DETAIL

SCALE: 1/2" = 1'-0"

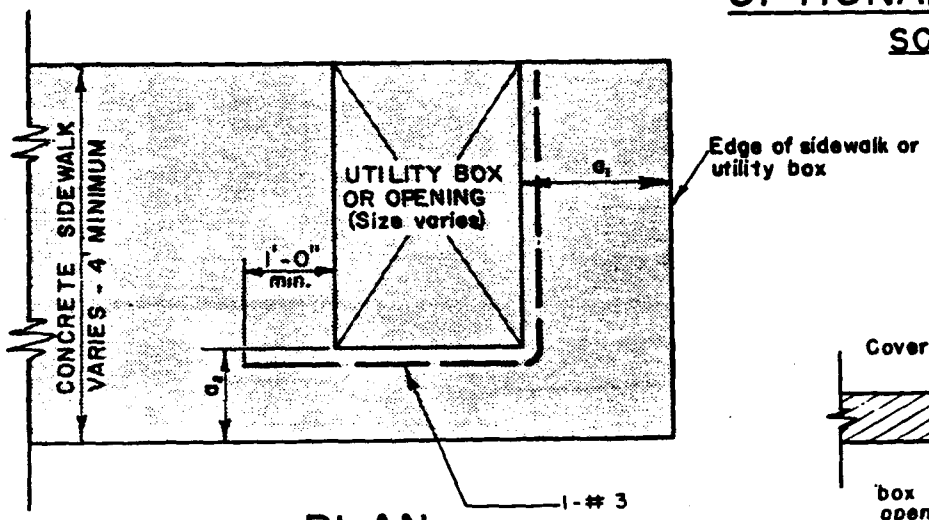

PLAN

OPENING AT EDGE OF SIDEWALK

SCALE: 1/2" = 1'-0"

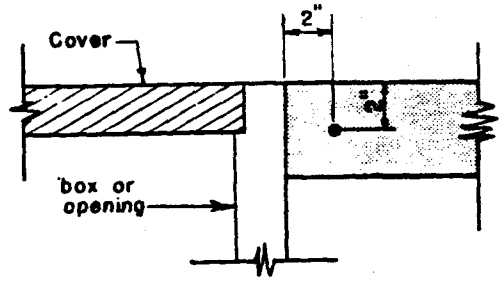

TYPICAL SECTION

SCALE: 1 1/2" = 1'-0"

SIDEWALK REINFORCEMENT DETAILS AT UTILITY BOXES OR OPENINGS

R-16	STANDARD DETAILS	SIDEWALK REINFORCEMENT DETAILS AT UTILITY BOXES OR OPENINGS SEPTEMBER 1984 SCALE: AS NOTED	COUNTY OF KAUAI CITY & COUNTY OF HONOLULU COUNTY OF MAUI COUNTY OF HAWAII

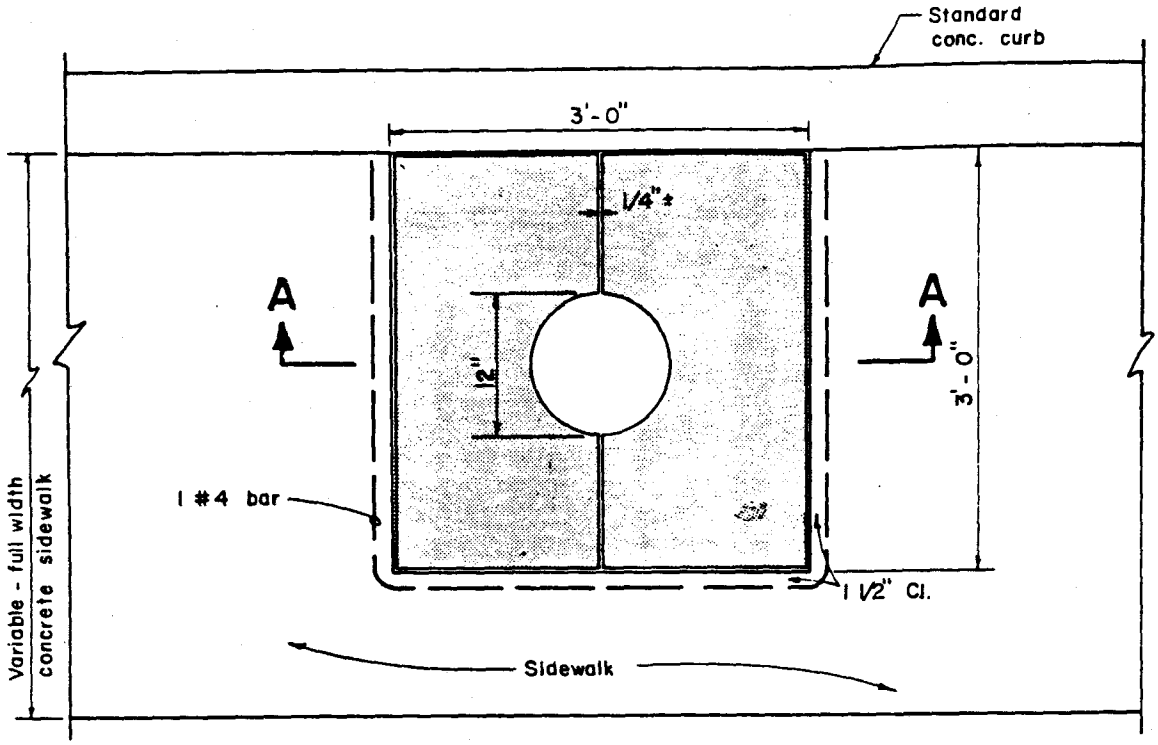

PLAN

SCALE: 3/4" = 1'-0"

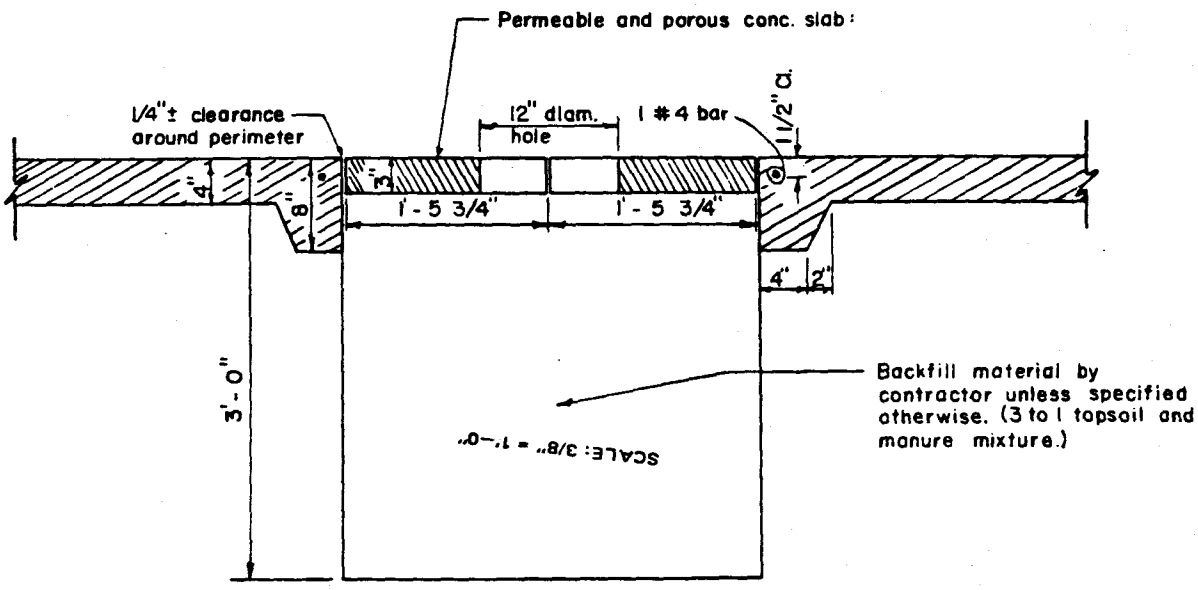

SECTION A-A

SCALE: 3/4" = 1'-0"

TREE WELL WITH CONCRETE COVER

COUNTY OF KAUAI CITY & COUNTY OF HONOLULU COUNTY OF MAUI COUNTY OF HAWAII	TREE WELL WITH CONCRETE COVER SCALE:3/4" = 1'-0" SEPTEMBER 1984	STANDARD DETAILS	R-17

NOTES:

1. Posts and braces shall be Schedule 40 (standard weight) pipe. Sizes specified are outside diameter.
2. All fencing material shall be galvanized steel.
3. Top rail couplings shall be located within 6" of line posts.
4. Top of concrete footing shall be crowned to shed water.

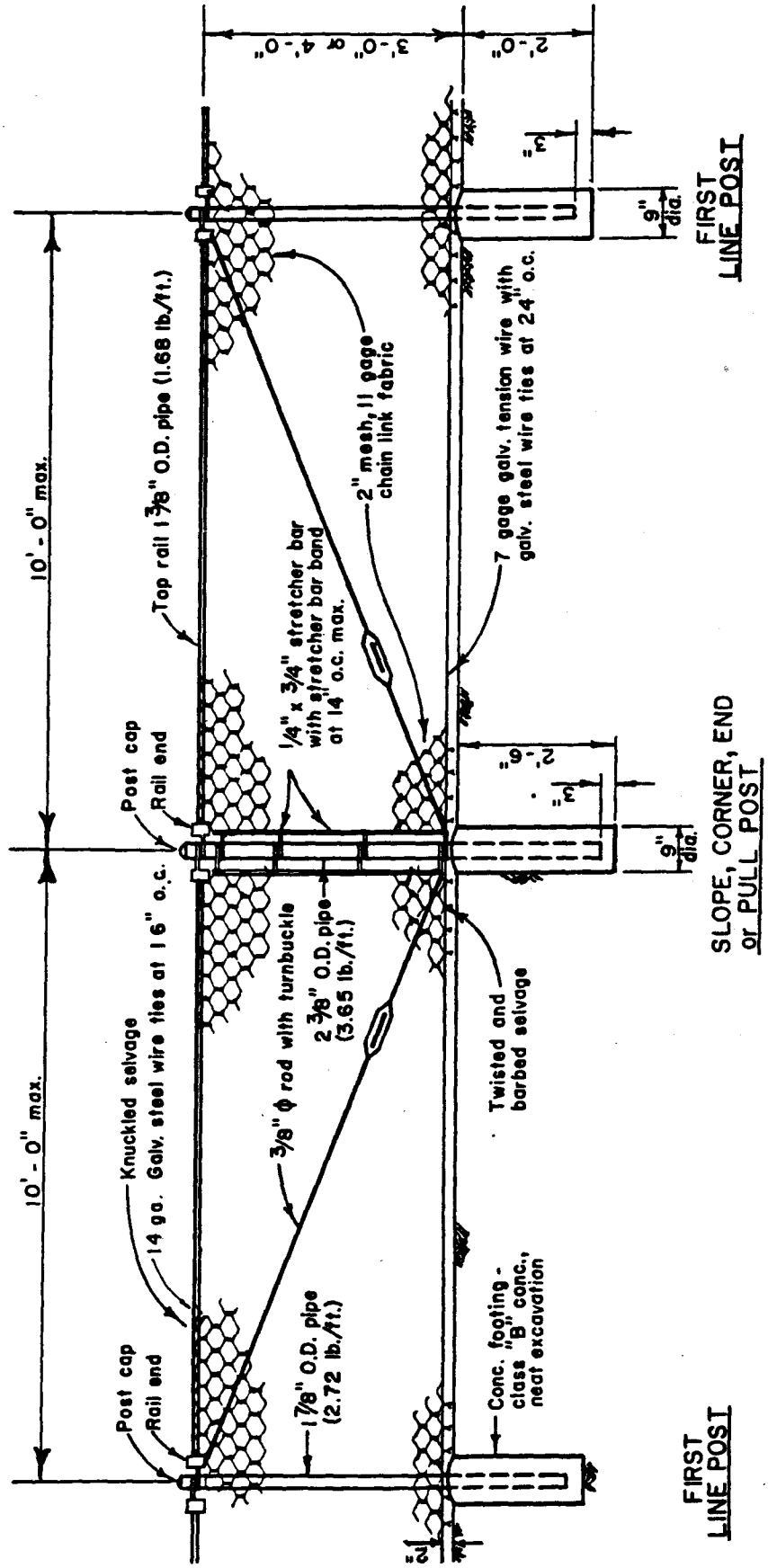

R-18	STANDARD DETAILS	3' OR 4' CHAIN LINK FENCE SEPTEMBER 1984 SCALE: 3/8" = 1'-0"	COUNTY OF KAUAI CITY & COUNTY OF HONOLULU COUNTY OF MAUI COUNTY OF HAWAII

COUNTY OF KAUAI
CITY & COUNTY OF HONOLULU
COUNTY OF MAUI
COUNTY OF HAWAII

SCALE: 3/8" = 1'-0"

6' CHAIN LINK FENCE

SEPTEMBER 1984

STANDARD DETAILS

R-19

NOTES:

1. Posts and braces shall be Schedule 40 (standard weight) pipe. Sizes specified are outside diameter.
2. All fencing material shall be galvanized steel.
3. Top rail couplings shall be located within 6" of line posts.
4. Top of concrete footing shall be crowned to shed water.

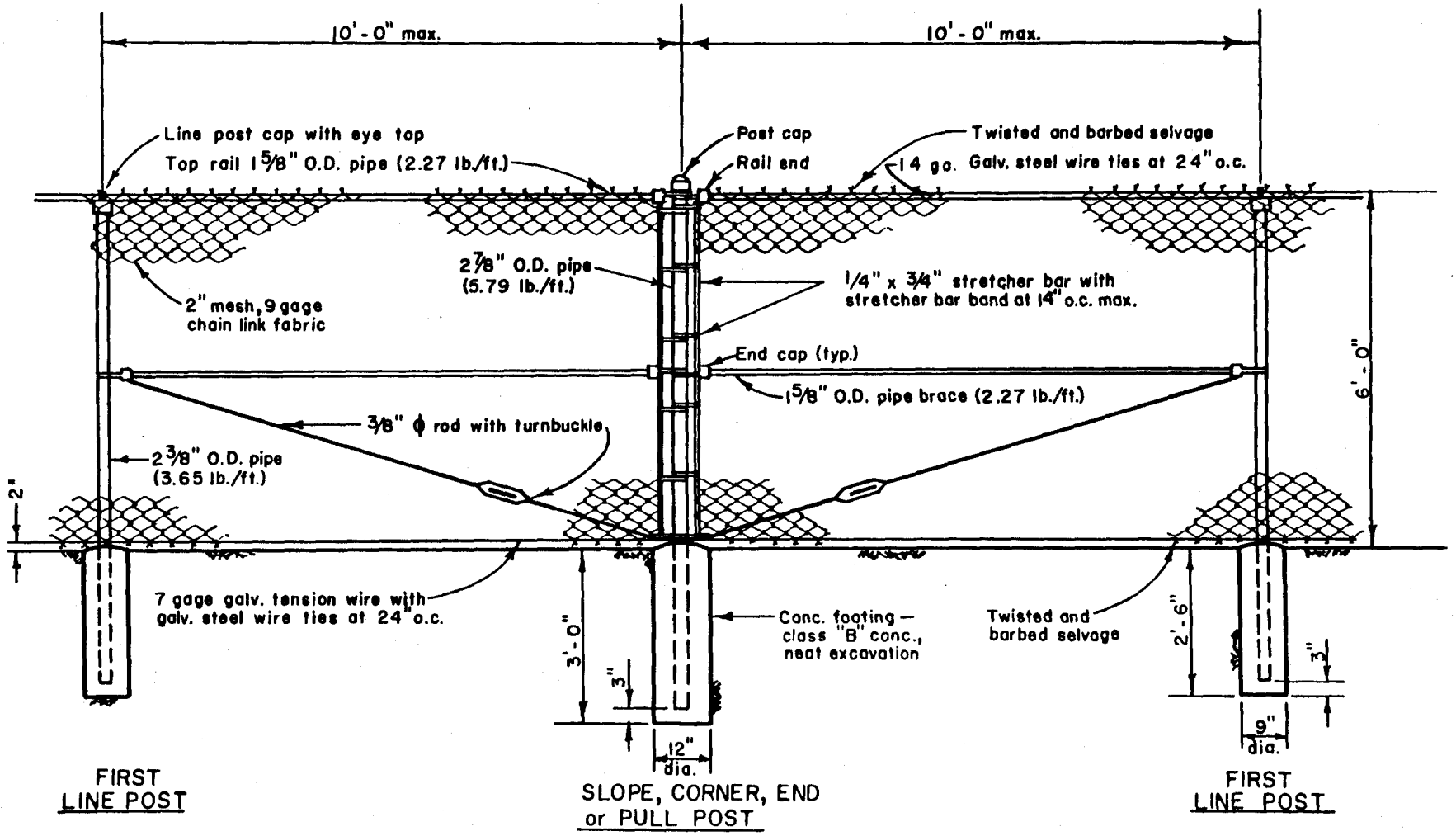

R-20

STANDARD DETAILS

TYPICAL SINGLE GATE

SEPTEMBER 1984

SCALE: 3/8" = 1'-0"

COUNTY OF KAUAI
CITY & COUNTY OF HONOLULU
COUNTY OF MAUI
COUNTY OF HAWAII

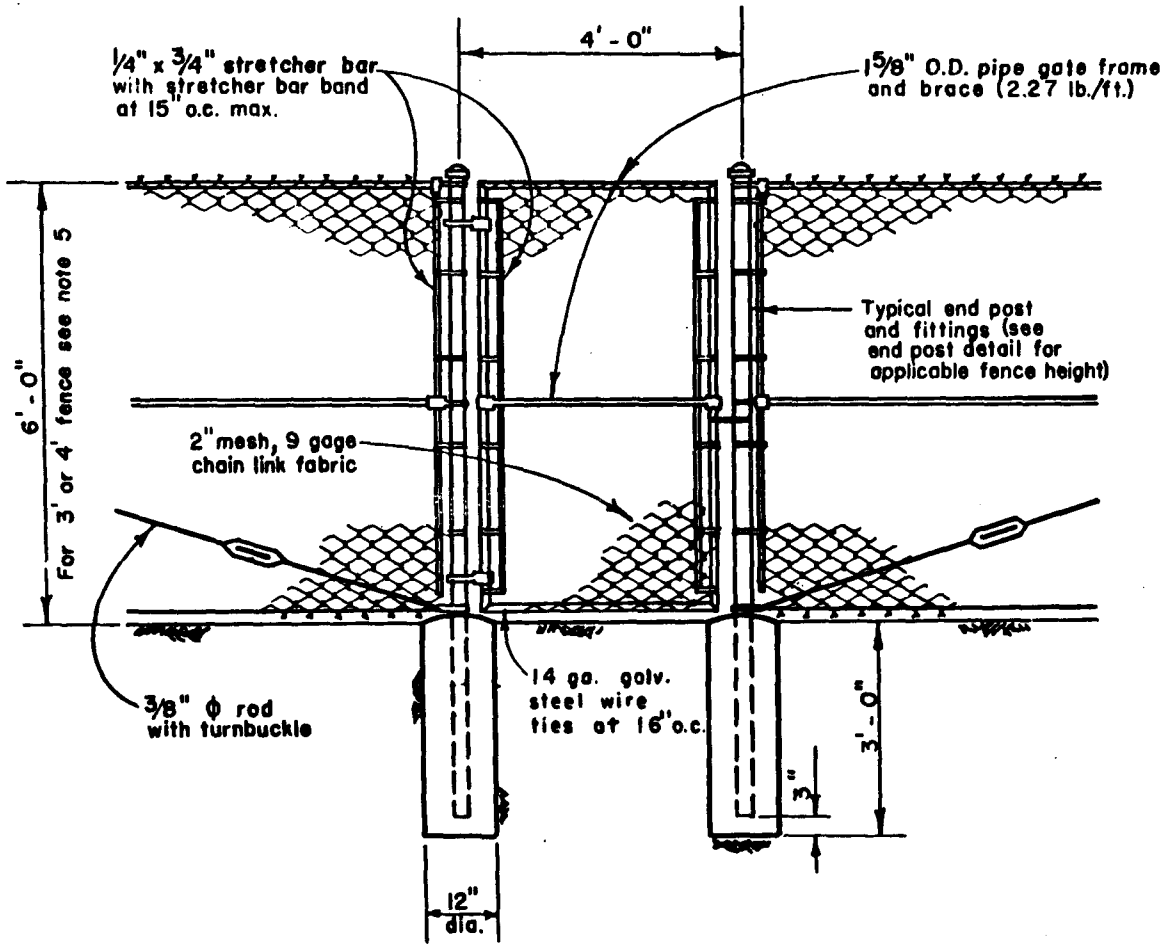

NOTES:

1. All fencing material including gate hardware shall be galvanized steel.
2. Posts, braces, and gate frames shall be schedule 40 (standard weight) pipe. Sizes specified are outside diameter.
3. Gate shall be provided with provisions for padlocking.
4. Corner fittings for gate frames may be used in lieu of welding.
5. For 3' or 4' high gate, eliminate all horizontal bracing and attach truss rod to top of adjacent line post. Chain link fabric shall be 2" mesh, 11 gage.
6. Gate shall have knuckled selvage top and bottom.
7. Top of concrete footing shall be crowned to shed water.

TYPICAL PERSONNEL GATE

SCALE: 3/8" = 1' - 0"

COUNTY OF KAUAI
CITY & COUNTY OF HONOLULU
COUNTY OF MAUI
COUNTY OF HAWAII

SCALE: 3/8" = 1'-0"

TYPICAL DOUBLE GATE

MARCH 1991

STANDARD DETAILS

R-21A

SUPERSEDES R-21

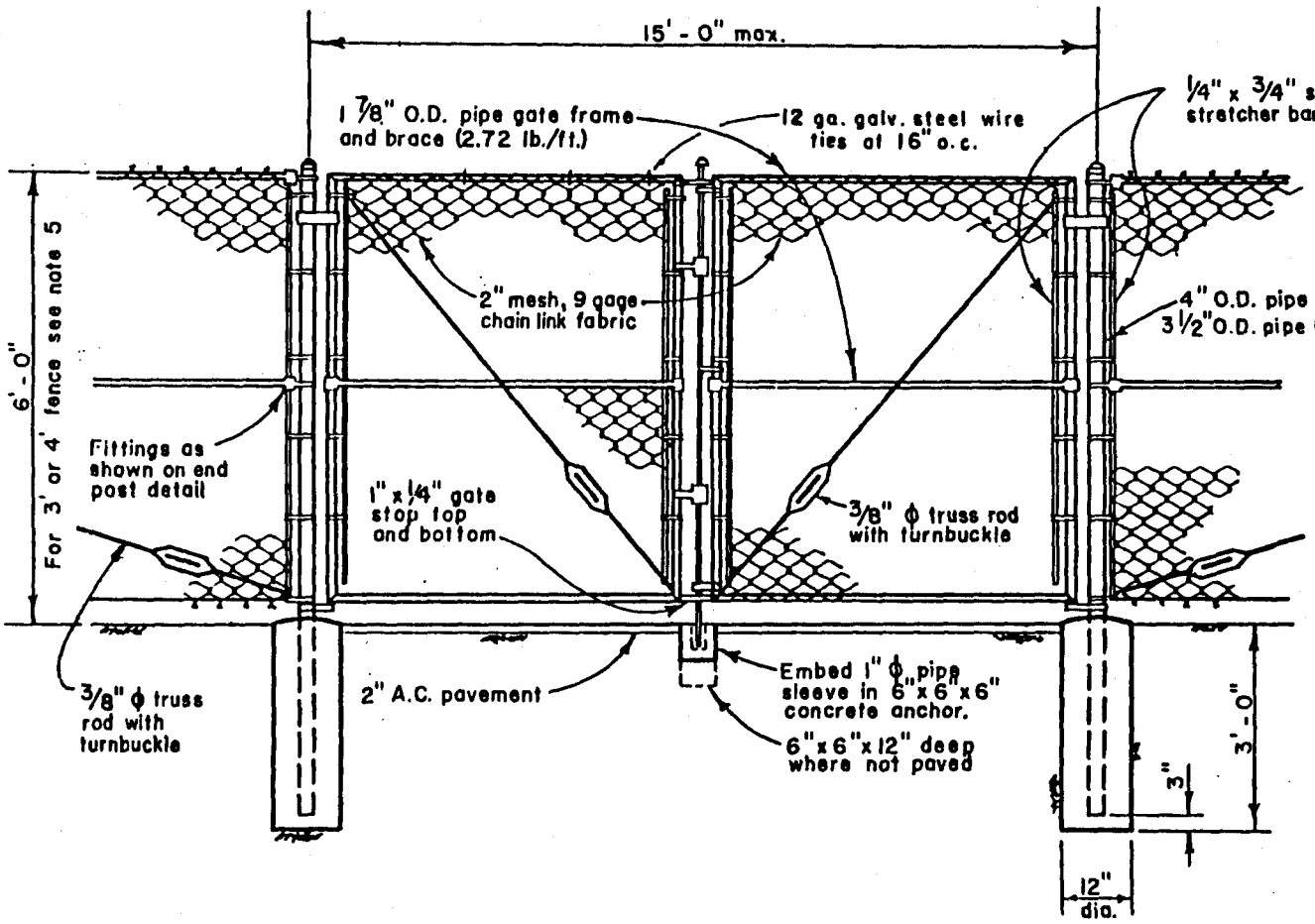

NOTES:

1. All fencing material including gate hardware shall be galvanized steel.
2. Posts, braces, and gate frames shall be schedule 40 (standard weight) pipe. Sizes specified are outside diameter.
3. Gate shall be provided with tubular plunger bar, 1 lock keeper, 1 lock keeper guide, 2 latch forks, 2 fork catches, 1 catch for plunger bar, and 2 gate stops located as directed by the engineer.
4. Corner fittings for gate frames may be used in lieu of welding.
5. For 3' or 4' high gate, eliminate all horizontal bracing and attach truss rod to top of adjacent line post. Chain link fabric shall be 2" mesh, 11 gage.
6. Gate shall have knuckled selvage top and bottom.
7. Top of concrete footing shall be crowned to shed water.

TYPICAL DOUBLE SWING GATE

SCALE: 3/8" = 1'-0"

TYPE A BOLT	D	L
Splice Bolt	5/16"	1¼"
Rail Bolt for Conc. Post (No Block)	3/32"	9½"
Rail Bolt for Metal Block or Metal Post	3/32"	2"

TYPE B BOLT	L
Post Bolt for Conc. Post with Metal Blocks	9½"
Post Bolt for Metal Post with Metal Block	1¾"

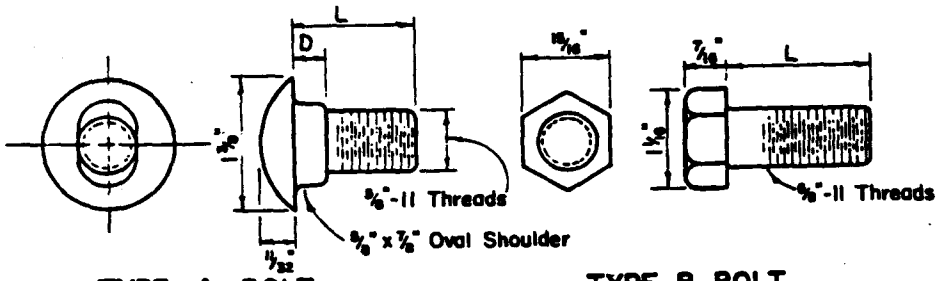

TYPE A BOLT

TYPE B BOLT

SPLICE RAIL AND POST BOLTS

Scale: ½ Size

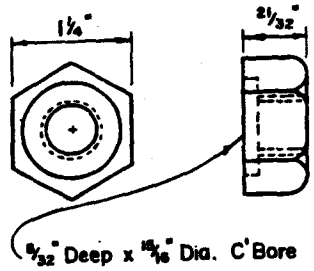

5/32" Deep x 15/16" Dia. C'Bore for Type A Bolt only. Plain nut for Type B Bolt.

HEXAGON NUT

Scale: ½ Size

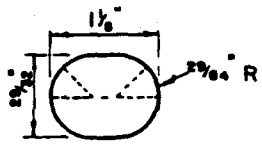

SPLICE BOLT SLOT

Scale: ½ Size

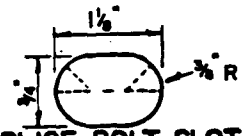

SPLICE BOLT SLOT FOR ALL ENDS

Scale: ½ Size

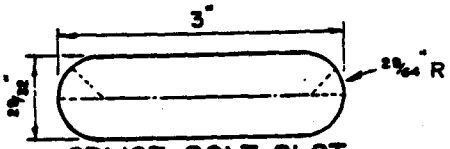

SPLICE BOLT SLOT FOR SPECIAL END SHOE

Scale: ½ Size

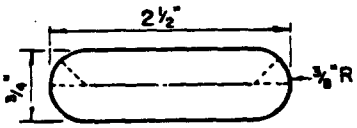

POST BOLT SLOT

Scale: ½ Size

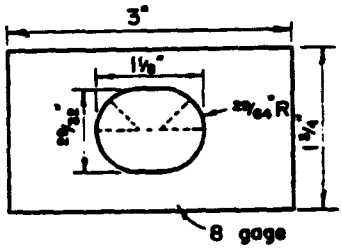

RAIL WASHER

Scale: ½ Size

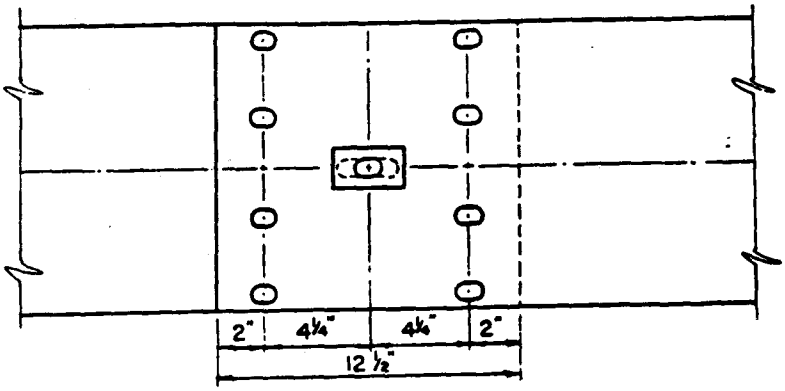

RAIL SPLICE

Scale: 1½" = 1'-0"

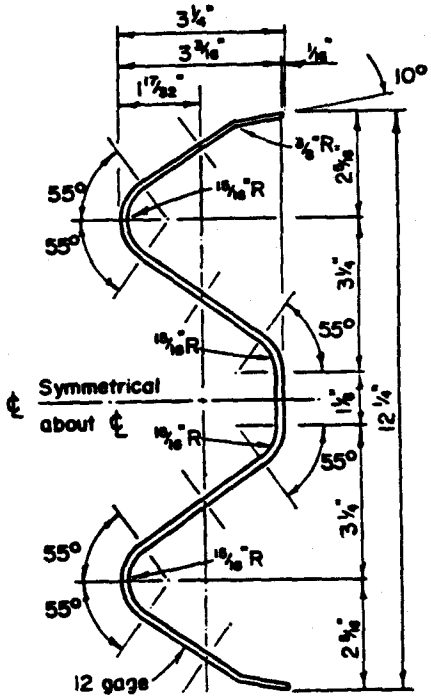

RAIL ELEMENT SECTION

Scale: 3" = 1'-0"

R-22	STANDARD DETAILS	METAL GUARDRAIL DETAILS SEPTEMBER 1984 SCALE: AS NOTED	COUNTY OF KAUAI CITY & COUNTY OF HONOLULU COUNTY OF MAUI COUNTY OF HAWAII

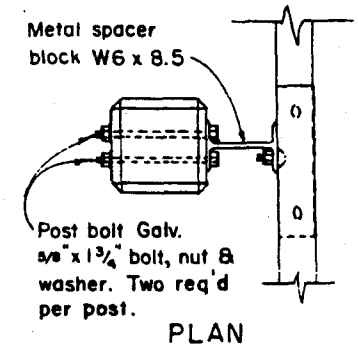

PLAN

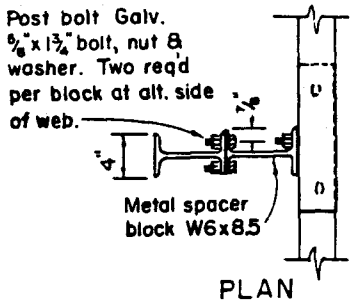

PLAN

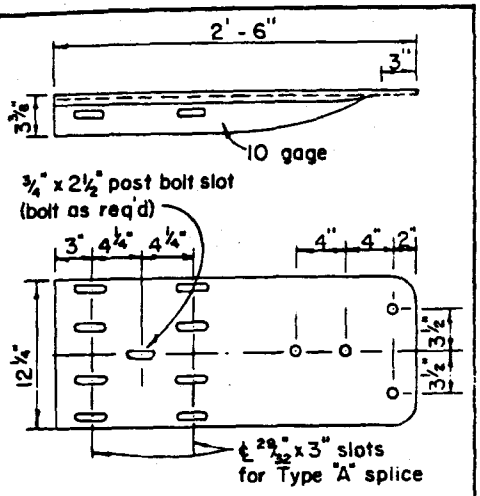

SPECIAL END SHOE

Scale: 1 1/2" = 1'-0"

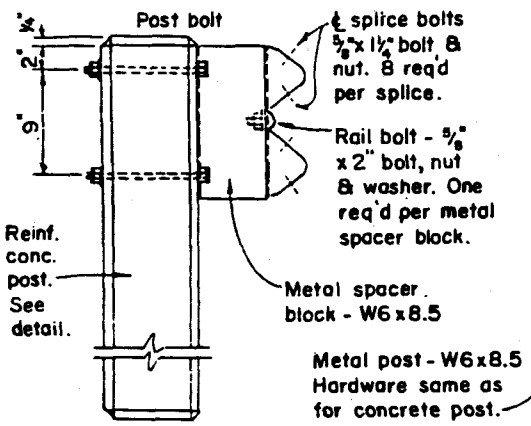

ELEVATION

CONC. POST WITH SPACER BLOCK

Scale: 3/4" = 1'-0"

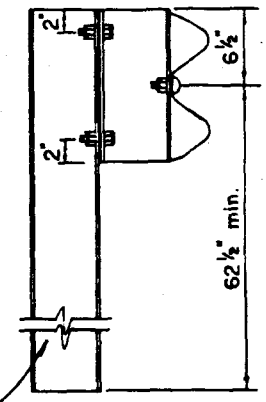

ELEVATION

METAL POST WITH SPACER BLOCK

Scale: 3/4" = 1'-0"

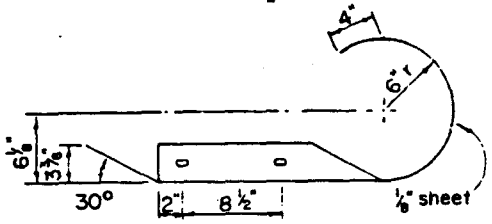

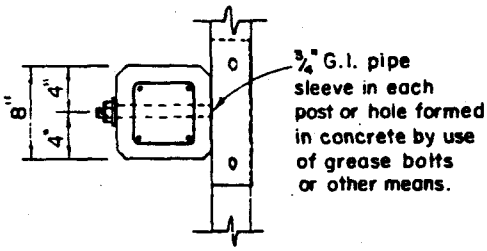

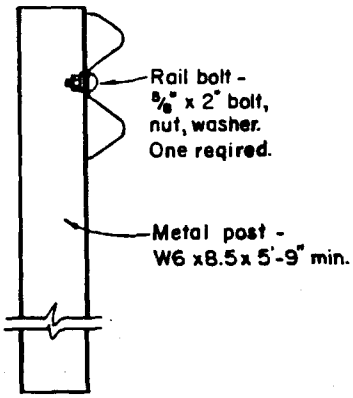

ELEVATION

METAL POST WITHOUT SPACER BLOCK

Scale: 3/4" = 1'-0"

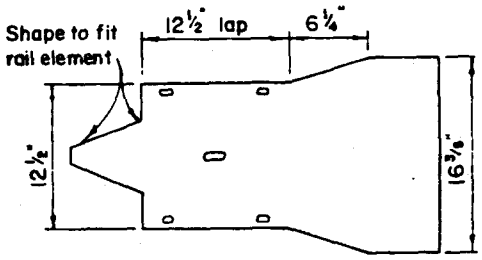

CURVED END

Scale: 1 1/2" = 1'-0"

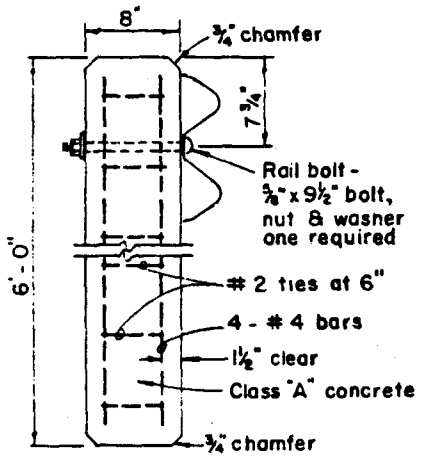

ELEVATION

CONC. POST WITHOUT SPACER BLOCK

Scale: 3/4" = 1'-0"

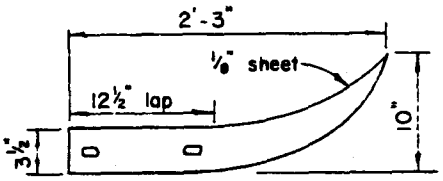

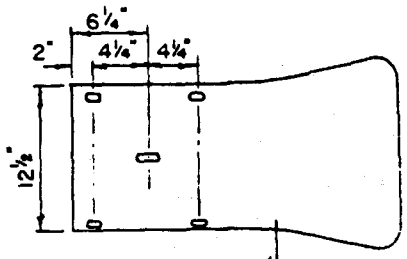

Same as rail element section

FLARED END

Scale: 1 1/2" = 1'-0"

Note: All metal shall be galvanized

COUNTY OF KAUAI CITY & COUNTY OF HONOLULU COUNTY OF MAUI COUNTY OF HAWAII	METAL GUARDRAIL DETAILS SCALE: AS NOTED SEPTEMBER 1984	STANDARD DETAILS	R-23

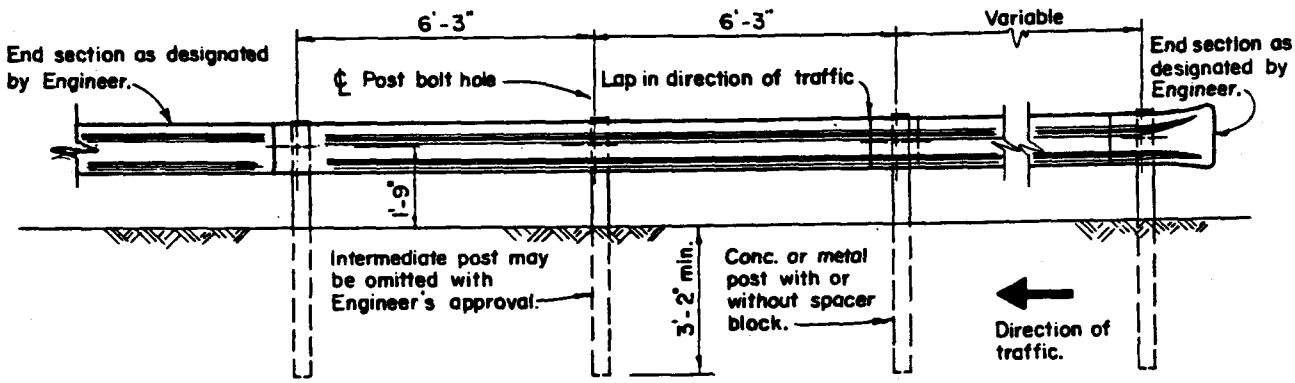

TYPICAL ELEVATION

Scale: ¼" = 1'-0"

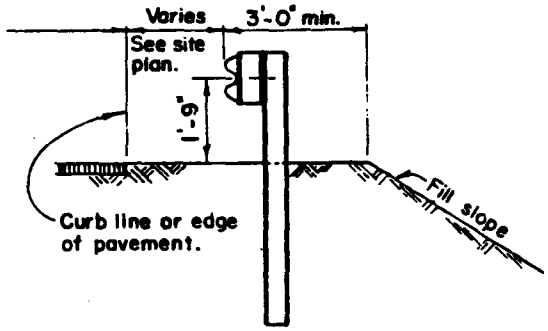

TYPICAL SECTION

Scale: ¼" = 1'-0"

R-24	STANDARD DETAILS	METAL GUARDRAIL DETAILS SEPTEMBER 1984 SCALE: 1/4" = 1'-0"	COUNTY OF KAUAI CITY & COUNTY OF HONOLULU COUNTY OF MAUI COUNTY OF HAWAII

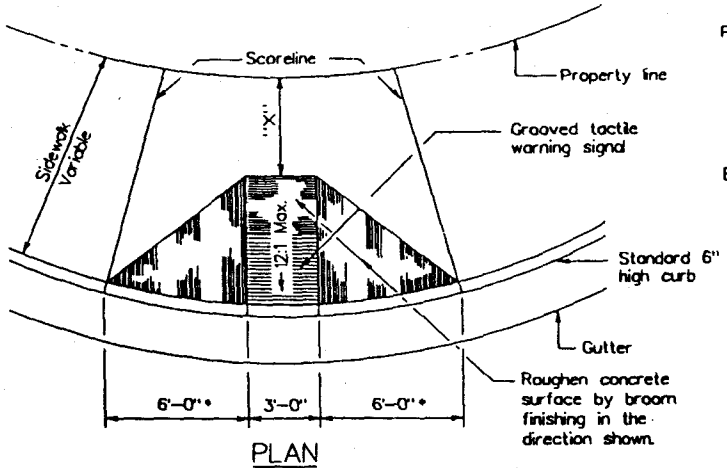

PLAN

SCALE: 1/8" = 1'-0"

*If "X" ≥ 48", flares shall be 5'-0" wide. See note 5.

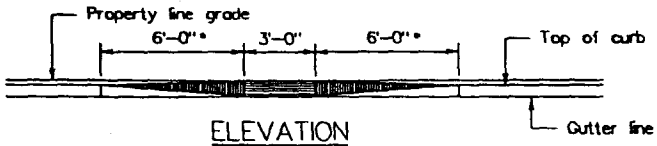

ELEVATION

SCALE: 1/8" = 1'-0"

CURB RAMP

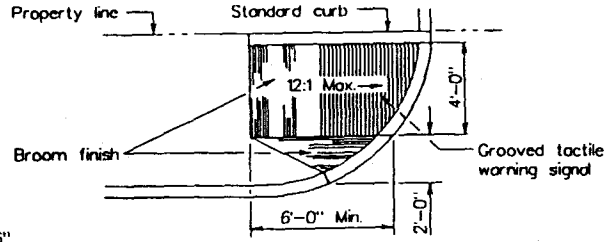

RAMP AT CURBED DRIVEWAY

SCALE: 1/8" = 1'-0"

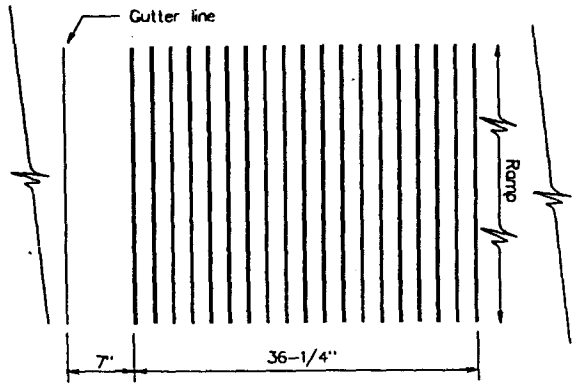

PLAN

NOT TO SCALE

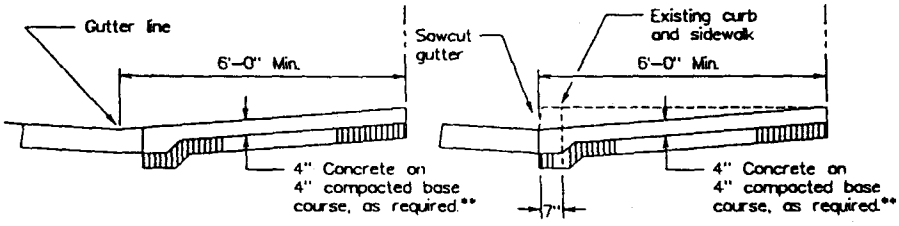

**For City & County of Honolulu, use 6" aggregate subbase, per detail R-28.

TYPICAL SECTIONS

SCALE: 1/4" = 1'-0"

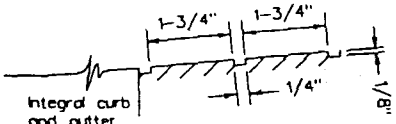

ELEVATION

NOT TO SCALE

GROOVED TACTILE WARNING SIGNAL

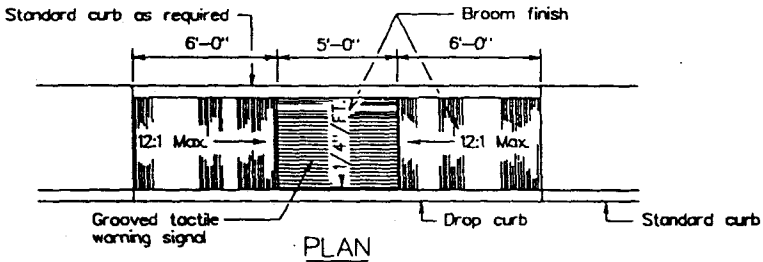

PLAN

SCALE: 1/8" = 1'-0"

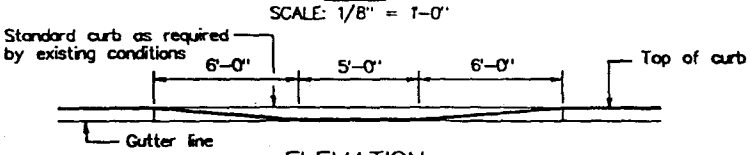

ELEVATION

SCALE: 1/8" = 1'-0"

RAMP AT NARROW SIDEWALK (UNDER 6')

NOTES

1. When necessitated by existing physical conditions, alternate curb ramps may be used subject to engineer's approval.
2. Subject to field conditions, the engineer shall determine the final location of the curb ramp.
3. Where necessary, pullboxes, handholes, manholes, etc. Shall be adjusted to match curb ramp grade. Adjustments shall be considered incidental to curb ramp construction, unless otherwise noted.
4. For an existing sidewalk, entire sidewalk between nearest score lines shall be removed.
5. For curbs > 6" high, flares shall be constructed at a max. ratio of 12H:1V. However, if "X" ≥ 48", flares shall be constructed at a max. ratio of 10H:1V.

COUNTY OF KAUAI CITY & COUNTY OF HONOLULU COUNTY OF MAUI COUNTY OF HAWAII	CURB RAMP SCALE: AS NOTED SEPTEMBER 1992	STANDARD DETAILS	R-25 REVISED

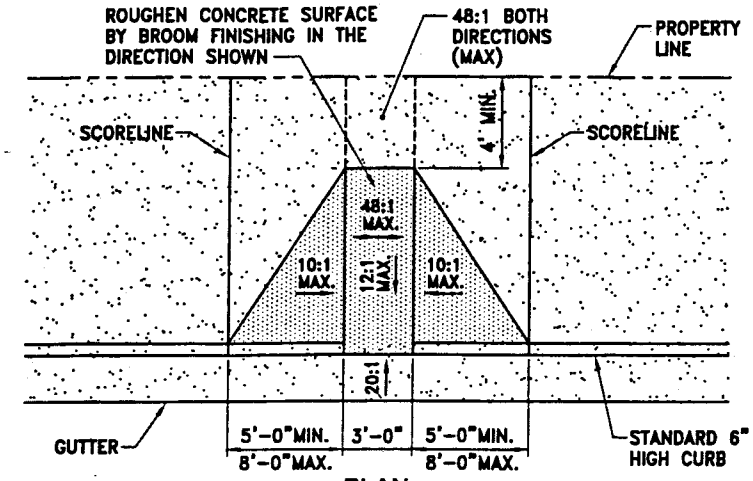

PLAN
SCALE: 1/8"=1'-0"

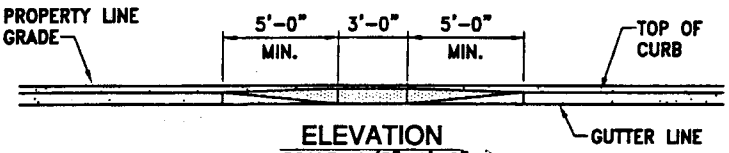

ELEVATION
SCALE: 1/8"=1'-0"

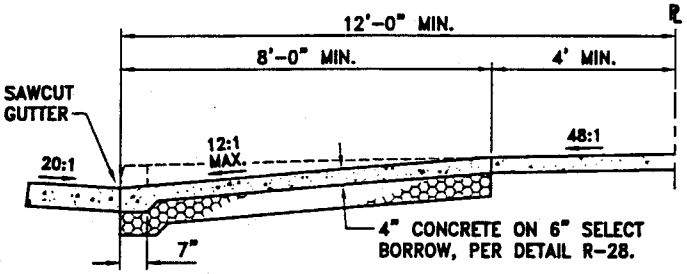

SECTION
SCALE: 1/4"=1'-0"

RAMP FOR 12' MIN. SIDEWALK (TYPE A)

SEE NOTE 5 & 6

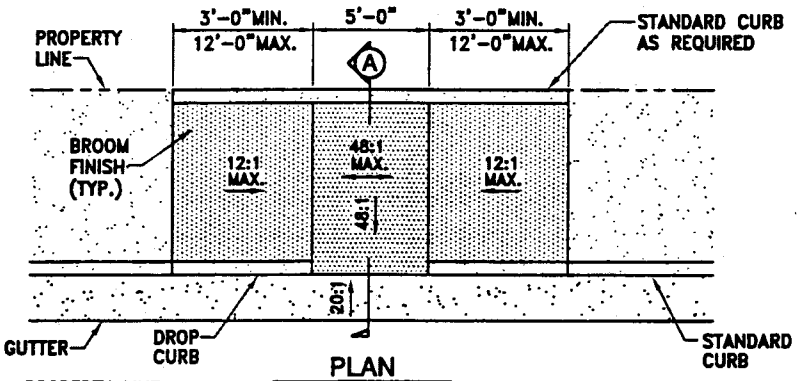

PLAN
SCALE: 1/8"=1'-0"

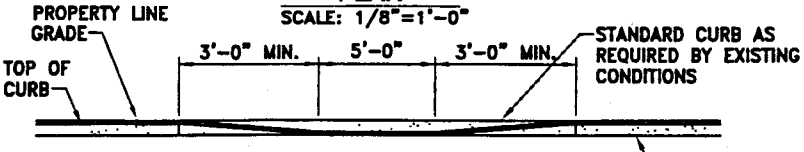

ELEVATION
SCALE: 1/8"=1'-0"

RAMP AT NARROW SIDEWALK- UNDER 12' (TYPE B)

NOTES

1. WHEN NECESSITATED BY EXISTING PHYSICAL CONDITIONS, CUSTOM-DESIGNED CURB RAMPS SHOULD BE USED SUBJECT TO CITY'S APPROVAL.
2. SUBJECT TO FIELD CONDITIONS, THE CITY SHALL DETERMINE THE FINAL LOCATION OF THE CURB RAMP.
3. AT INTERSECTIONS CURB RAMPS FOR EACH CROSSWALK ARE PREFERRED AND SHALL BE IN LINE AND WITHIN THE CROSSWALK. HOWEVER A SINGLE CURB RAMP FOR DIAGONAL CROSSWALKS CAN BE APPROVED IF THE DESIGN DETAIL IS ACCEPTABLE BY THE CITY.
4. FOR AN EXISTING SIDEWALK, ENTIRE SIDEWALK BETWEEN NEAREST SCORE LINES SHALL BE REMOVED.
5. FOR SIDEWALK WIDTHS LESS THAN 12', USE DETAIL FOR RAMP AT NARROW SIDEWALKS.
6. THIS DETAIL IS INTENDED AS A GUIDELINE FOR NEW CURB RAMP CONSTRUCTION. A SITE SPECIFIC DETAIL THAT MEETS THESE REQUIREMENTS SHALL BE SHOWN ON THE PLANS.
7. IN ADDITION, PASSING SPACES ALONG NEW SIDEWALKS SHALL BE PROVIDED AT MAXIMUM 200' INTERVALS AS REQUIRED BY ADA GUIDELINES. THE PASSING AREA SHALL BE A MINIMUM 5' WIDE BY 5' LONG AS FEASIBLE.
8. NO PULLBOXES, HANDHOLES, MANHOLES, ETC. SHALL BE ALLOWED IF THEY CONTAIN ANY OPENINGS > 1/2" AND ARE OF A POTENTIALLY SLIPPERY SURFACE.
9. TRANSITIONS FROM RAMPS TO GUTTERS AND STREETS SHALL BE FLUSH AND FREE OF ABRUPT CHANGES IN LEVEL. THE CHANGES IN LEVEL. THE MAXIMUM SLOPES OF ADJOINING GUTTERS, ROAD SURFACE IMMEDIATELY ADJACENT TO THE CURB RAMP, OR ACCESSIBLE ROUTE SHALL NOT EXCEED 20:1.

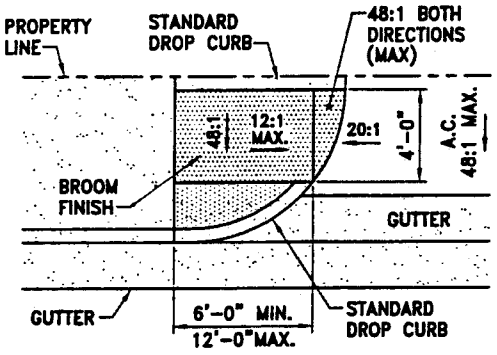

RAMP AT CURBED DRIVEWAY

SCALE: 1/8"=1'-0"

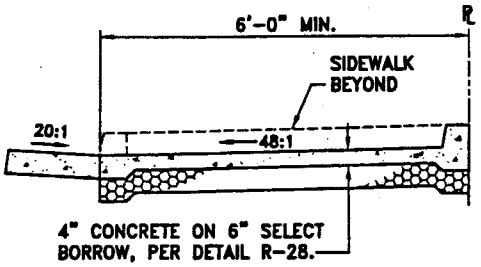

SECTION "A"
SCALE: 1/4"=1'-0"

SUPERSEDES R-25 * FOR C&C OF HONOLULU

CITY & COUNTY OF HONOLULU	CURB RAMP SCALE: AS NOTED APRIL 2000	STANDARD DETAILS	R-25A *

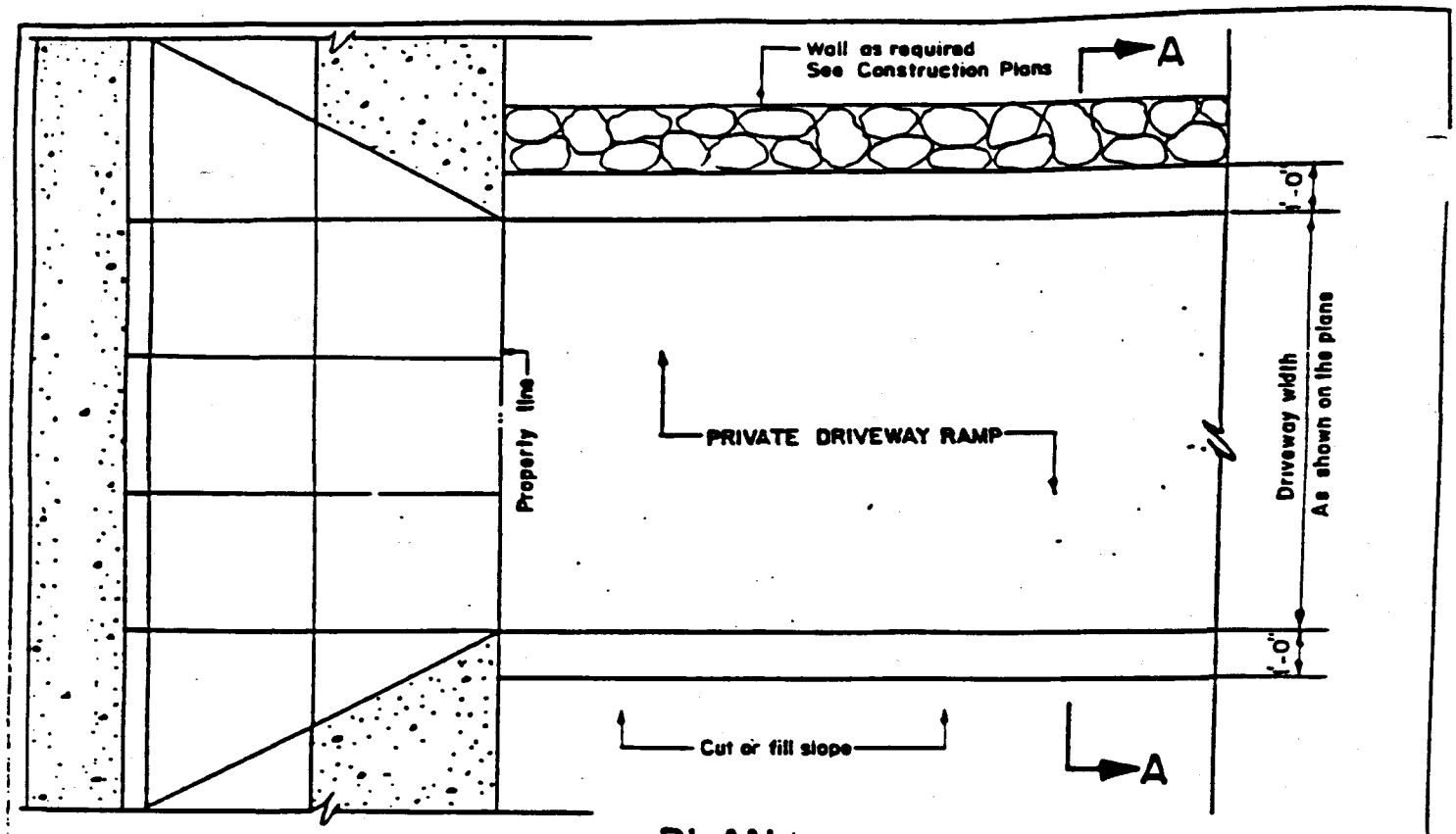

PLAN

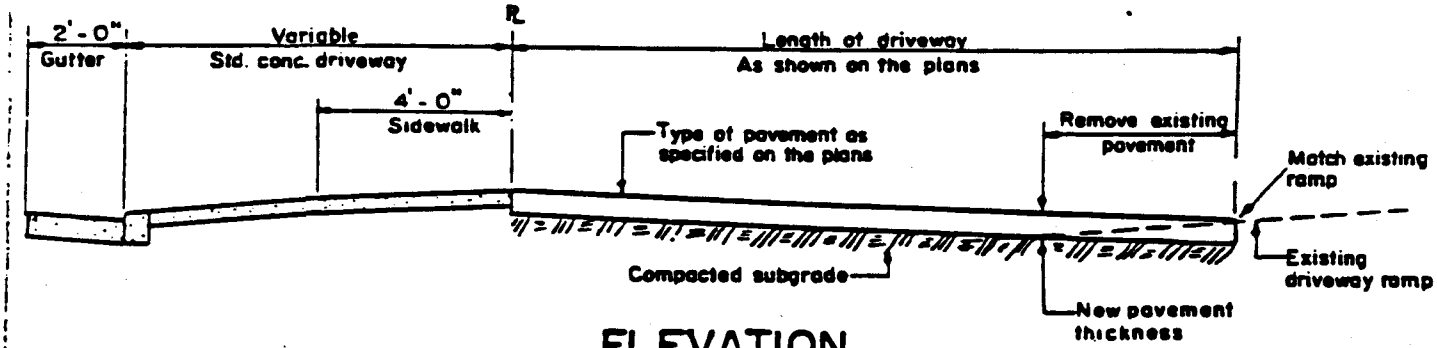

ELEVATION

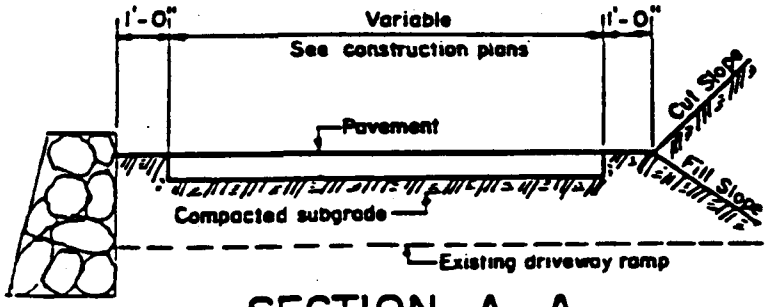

SECTION A-A

CONSTRUCTION NOTES

1. Asphaltic concrete pavement shall be 1 1/2" thick min. and constructed over a 4" thick base course.
2. Reinforced concrete pavement shall be 4" thick min., reinforced with 6 x 6 - 6/6 galvanized welded wire fabric and constructed on compacted subgrade.
3. Rolled coral driveway ramp shall be 3" thick min.
4. For all fill slopes use 4" top soil on fill material.

PRIVATE DRIVEWAY RAMP

R-26	STANDARD DETAILS	PRIVATE DRIVEWAY RAMP SEPTEMBER 1984 SCALE: 1/4" = 1'-0"	COUNTY OF KAUAI CITY & COUNTY OF HONOLULU COUNTY OF MAUI COUNTY OF HAWAII

NOTES

1. Sidewalk shall be broom finished perpendicular to curb line.
2. Premoulded expansion joint filler shall be 1/2" thick.

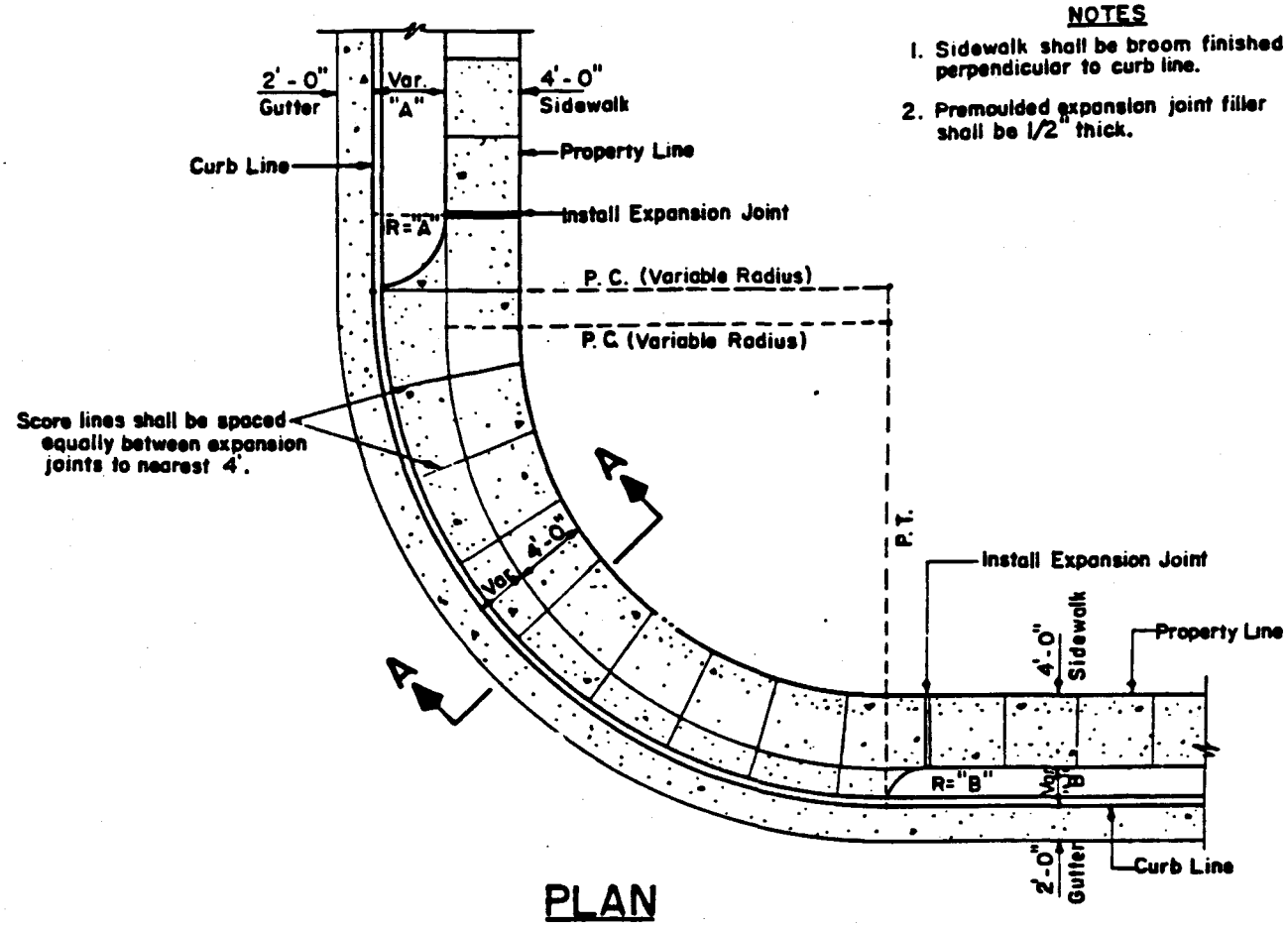

PLAN

SCALE: 1" = 10'-0"

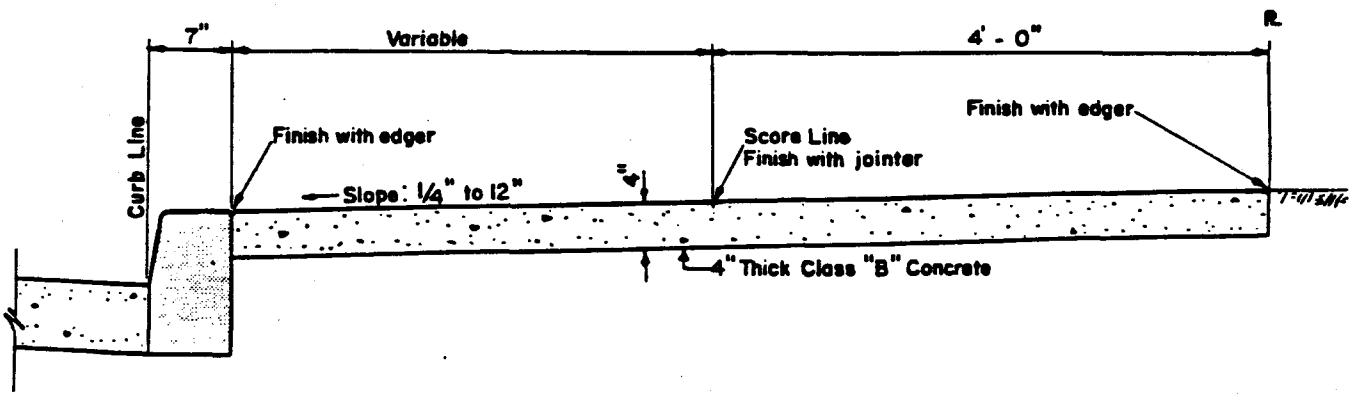

SECTION A-A

SCALE: 3/4" = 1'-0"

FULL WIDTH SIDEWALK AT CURB RETURN

COUNTY OF KAUAI CITY & COUNTY OF HONOLULU COUNTY OF MAUI COUNTY OF HAWAII	FULL-WIDTH SIDEWALK AT CURB RETURN SCALE: AS NOTED SEPTEMBER 1984	STANDARD DETAILS	R-27

STANDARD SIDEWALK WIDTHS

Sidewalk widths for sidewalks in districts described in the Comprehensive Zoning Code for the City and County of Honolulu shall conform to the following:

District	Paved Sidewalk Width
All Residential	4 feet minimum
A-1, A-2, and A-3 Apartment	4 feet minimum
A-4 and A-5 Apartment	6 feet minimum
H-1 Resort Hotel	4 feet minimum; required width for each location shall be determined by the Chief Engineer.
H-2 Hotel	Full width unless determined otherwise by the Chief Engineer.
B-1 Business	4 feet minimum
B-2, B-3, and B-5 Business	6 feet minimum
B-4 Business	Full width
All Industrial	4 feet minimum
All Planned Development (For streets to be dedicated to the City.)	4 feet minimum

SIDEWALK WITH STANDARD CURB & GUTTER

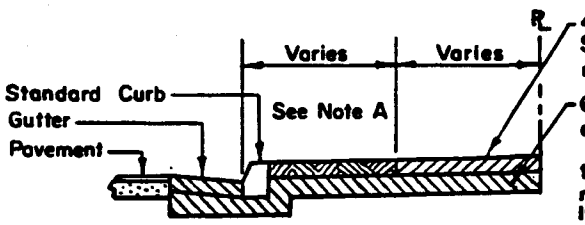

TYPICAL SECTION

4" Class B concrete broom finish perpendicular to curb. Standard slope 1/4" per L.F. Chief Engineer may authorize different slope to suit special conditions.

6" select borrow under sidewalk, curb and gutter wherever expansion value of subgrade exceeds 3%.

All utility installations shall be identified with the name of the utility company on the frame or cover. Checkered metal covers installed in sidewalks with slopes exceeding 10% shall be painted with non-skid paint.

Where concrete curb or sidewalk exists or is to be constructed, driveways shall be of concrete.

NOTE A:

1. Full-width concrete sidewalks may be permitted when constructed for the entire block.
2. Lawn grass or vegetative ground cover of a type with a maximum growth height of 4" or of a type that will grow at a trimmed height of 4" except vines or other planting which may be a tripping hazard. 4" topsoil required.
3. In lieu of lawn grass the Chief Engineer may authorize:
   (a) Acceptable artificial turf, with proper bases,
   (b) Precast masonry units laid closely in a uniform pattern (bricks, tile caps, etc.) with proper base,
   (c) Asphalt concrete on proper base,
   (d) Concrete-poured separately from the concrete sidewalk, and of similar thickness, and
   (e) Loose aggregates, such as basaltic, coral or limestone chips.
4. Street trees including existing trees may be permitted in sidewalk areas subject to the approval of the Department of Parks and Recreation.
5. Sprinklers, set flush with the surface, may be permitted by the Chief Engineer.
6. In areas where curbs exist with unpaved sidewalks, temporary asphalt concrete walkways may be installed, if authorized by the Chief Engineer.
7. Deviation from this standard and other sidewalk standards may be permitted upon written approval of the Chief Engineer.

SIDEWALK AREA WITHOUT CURB OR GUTTER

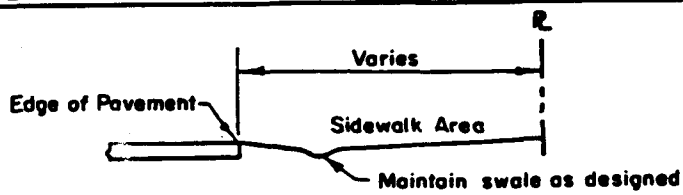

GENERAL NOTE:

Mailbox support shall be of a type which causes minimal obstruction to traffic.

R-28 REVISED	STANDARD DETAILS	SIDEWALK DETAILS SEPTEMBER 1984	CITY & COUNTY OF HONOLULU

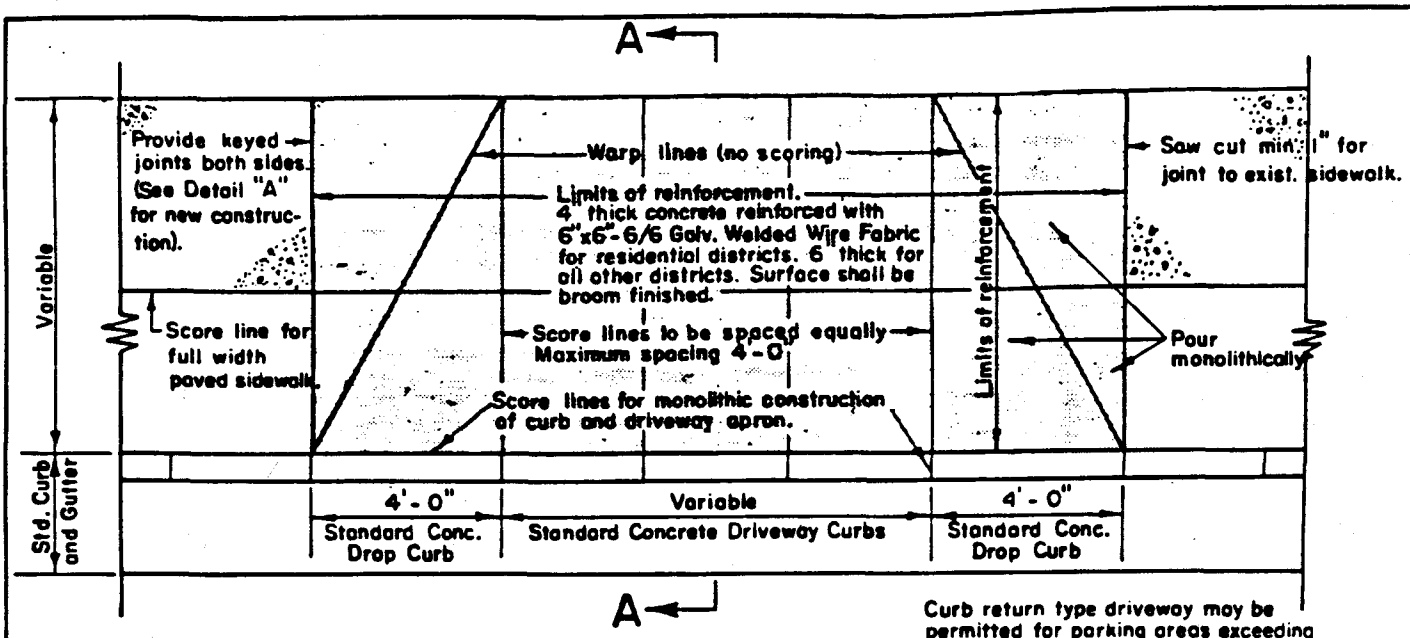

Curb return type driveway may be permitted for parking areas exceeding 100 spaces, fire stations and hospitals.

PLAN

SCALE: 1/4" = 1'-0"

NOTES:

1. 6 x 6 x 10/10 galv. wire fabric permitted for Hawaii, Kauai & Maui only.
2. Score lines shown apply to Honolulu only. For extension to existing driveway, scoring and finish shall match existing scoring and finish. For driveway constructed in built up area, scoring conforming to scoring of adjacent driveways may be authorized.

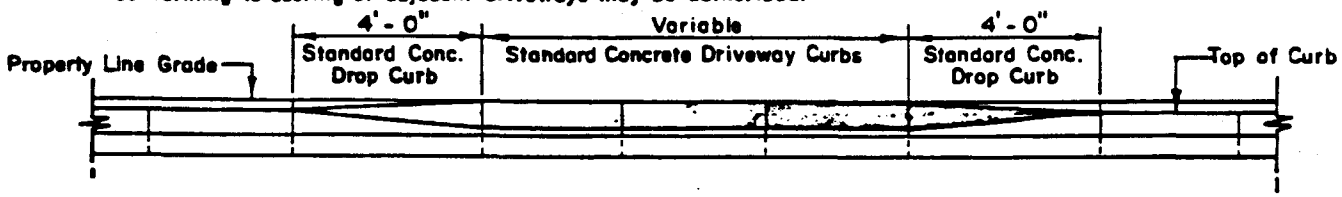

ELEVATION

SCALE: 1/4" = 1'-0"

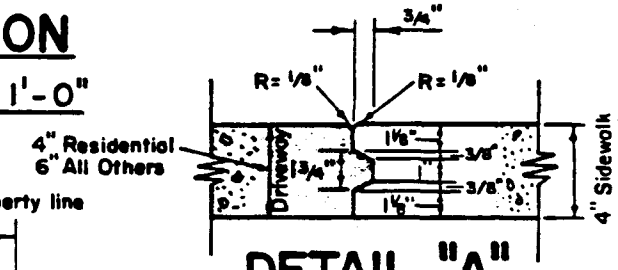

DETAIL "A"

SCALE: 1 1/2" = 1'-0"

(New Construction)

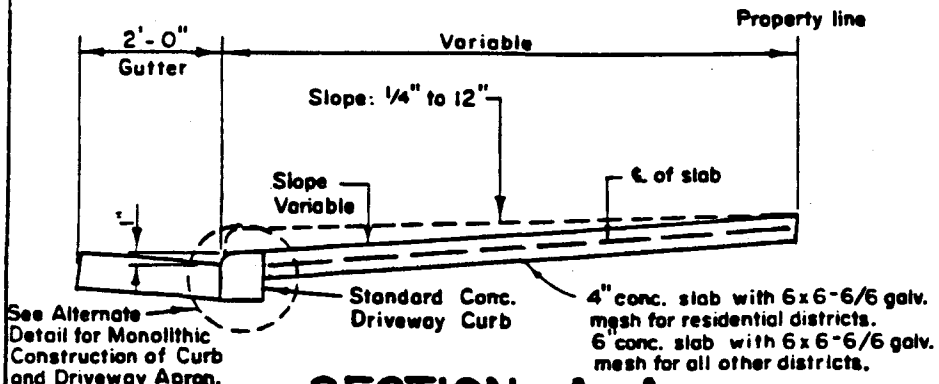

SECTION A-A

SCALE: 3/8" = 1'-0"

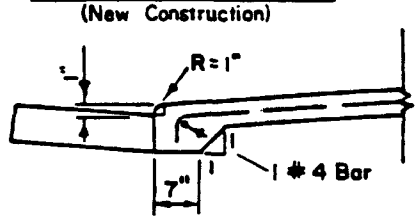

ALTERNATE DETAIL

SCALE: 3/8" = 1'-0"

STANDARD DRIVEWAY APRON

COUNTY OF KAUAI CITY & COUNTY OF HONOLULU COUNTY OF MAUI COUNTY OF HAWAII	DRIVEWAY APRON SCALE: AS NOTED SEPTEMBER 1984	STANDARD DETAILS	R-29

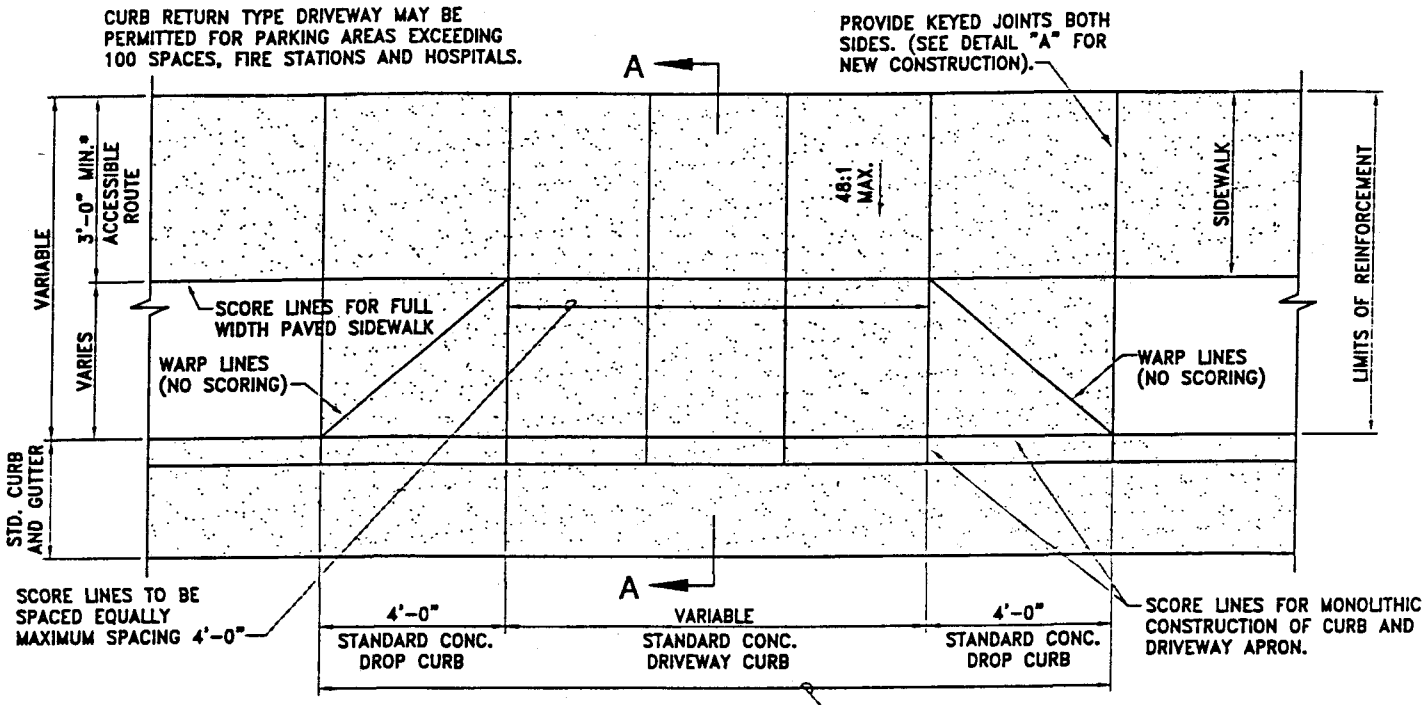

PLAN

SCALE: 1/4"=1'-0"

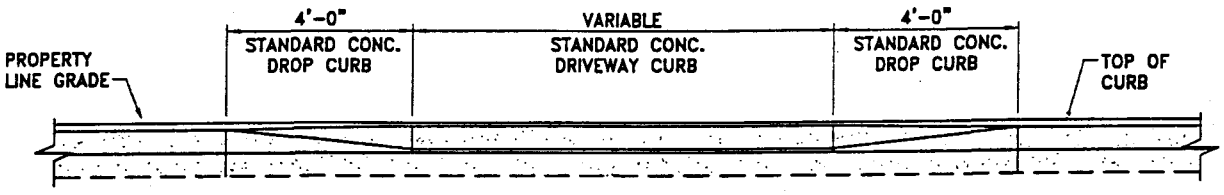

ELEVATION

SCALE: 1/4"=1'-0"

* MATCH WIDTH OF EXISTING SIDEWALK WHENEVER POSSIBLE

** BREAKOVER AND DEPARTURE ANGLES SHOULD NOT EXCEED 10 DEGREES OR 17%

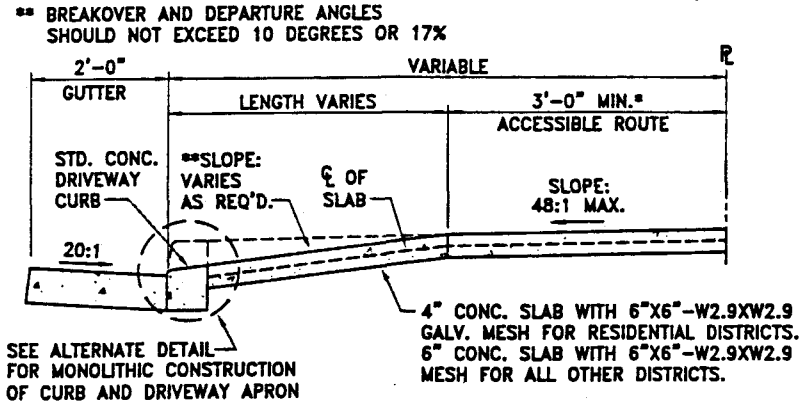

SECTION A-A

SCALE: 3/8"=1'-0"

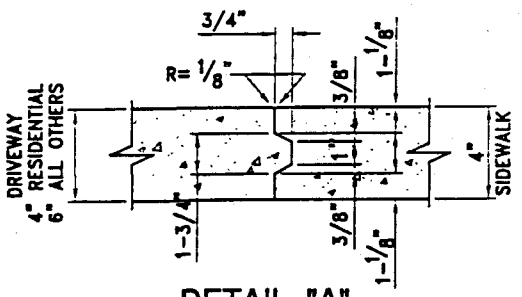

DETAIL "A"

SCALE: 1-1/2"=1'-0"
(NEW CONSTRUCTION)

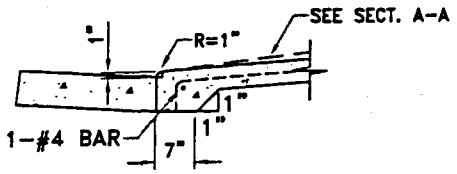

ALTERNATE DETAIL

SCALE: 3/8"=1'-0"

NOTES:

1. FOR EXTENSION TO EXISTING DRIVEWAY, SCORING AND FINISH SHALL MATCH EXISTING SCORING AND FINISH. FOR DRIVEWAY CONSTRUCTED IN BUILT UP AREAS, SCORING CONFORMING TO SCORING AT ADJACENT DRIVEWAYS MAY BE AUTHORIZED.
2. FOR NEW SUBDIVISIONS, PROVIDE CENTERLINE ROADWAY STATIONING TO THE CENTERLINE OF THE DRIVEWAY (APPLICABLE TO STD. DET. R-7).
3. THIS DETAIL IS FOR GUIDANCE ONLY. A DESIGN DETAIL MAY BE REQUIRED FOR EACH SPECIFIC SITE. THE DETAIL MUST COMPLY WITH THE REQUIREMENTS SHOWN.

SUPERSEDES R-29 FOR C&C OF HONOLULU *

CITY & COUNTY OF HONOLULU	DRIVEWAY APRON SCALE: AS NOTED APRIL 2000	STANDARD DETAILS	R-29A *

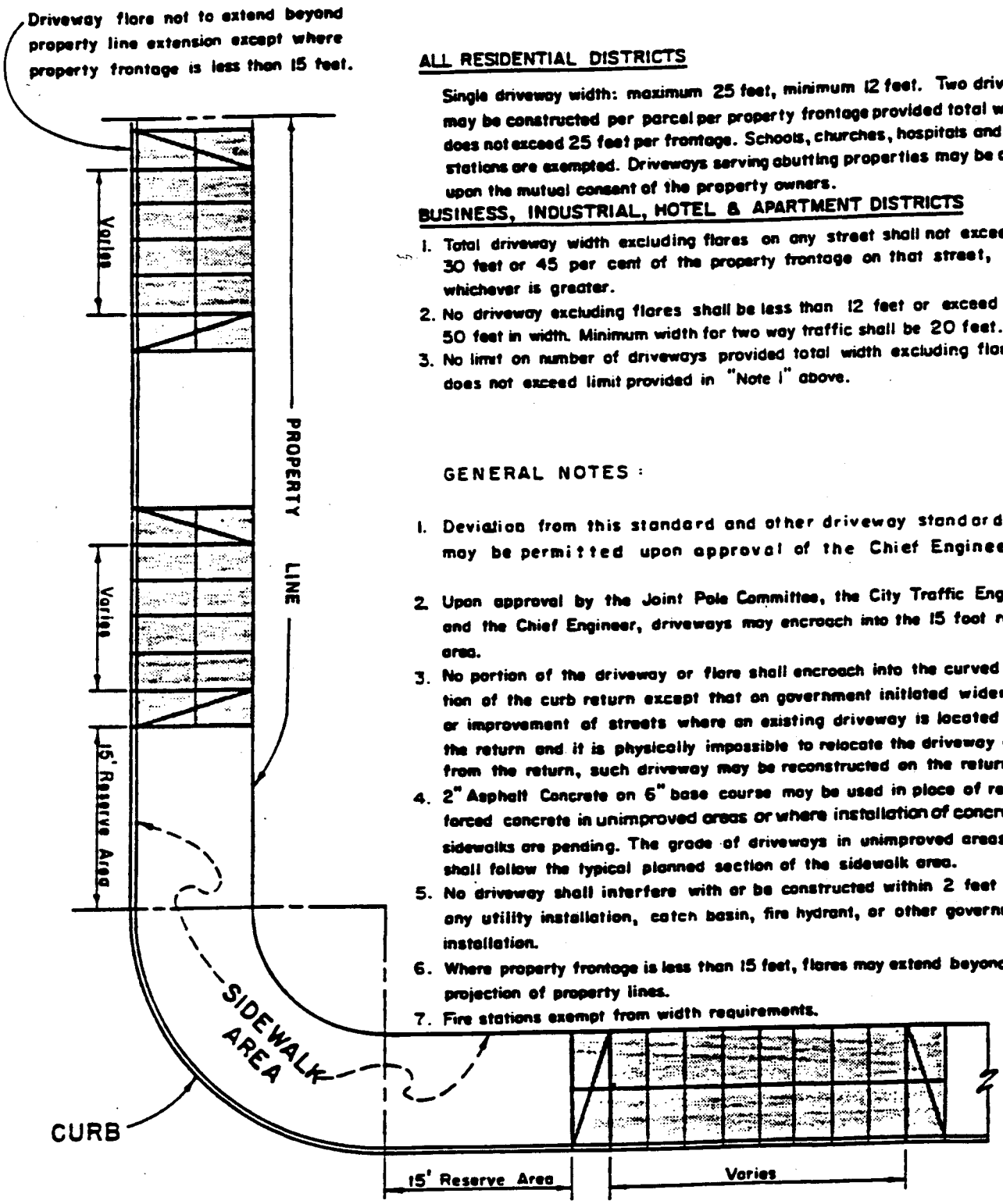

ALL RESIDENTIAL DISTRICTS

Single driveway width: maximum 25 feet, minimum 12 feet. Two driveways may be constructed per parcel per property frontage provided total width does not exceed 25 feet per frontage. Schools, churches, hospitals and fire stations are exempted. Driveways serving abutting properties may be combined upon the mutual consent of the property owners.

BUSINESS, INDUSTRIAL, HOTEL & APARTMENT DISTRICTS

1. Total driveway width excluding flares on any street shall not exceed 30 feet or 45 per cent of the property frontage on that street, whichever is greater.
2. No driveway excluding flares shall be less than 12 feet or exceed 50 feet in width. Minimum width for two way traffic shall be 20 feet.
3. No limit on number of driveways provided total width excluding flares does not exceed limit provided in "Note 1" above.

GENERAL NOTES :

1. Deviation from this standard and other driveway standards may be permitted upon approval of the Chief Engineer.
2. Upon approval by the Joint Pole Committee, the City Traffic Engineer, and the Chief Engineer, driveways may encroach into the 15 foot reserve area.
3. No portion of the driveway or flare shall encroach into the curved portion of the curb return except that on government initiated widening or improvement of streets where an existing driveway is located on the return and it is physically impossible to relocate the driveway away from the return, such driveway may be reconstructed on the return.
4. 2" Asphalt Concrete on 6" base course may be used in place of reinforced concrete in unimproved areas or where installation of concrete sidewalks are pending. The grade of driveways in unimproved areas shall follow the typical planned section of the sidewalk area.
5. No driveway shall interfere with or be constructed within 2 feet of any utility installation, catch basin, fire hydrant, or other government installation.
6. Where property frontage is less than 15 feet, flares may extend beyond the projection of property lines.
7. Fire stations exempt from width requirements.

STANDARD DRIVEWAY LAYOUT

R-30	STANDARD DETAILS	DRIVEWAY LAYOUT SEPTEMBER 1984	CITY & COUNTY OF HONOLULU

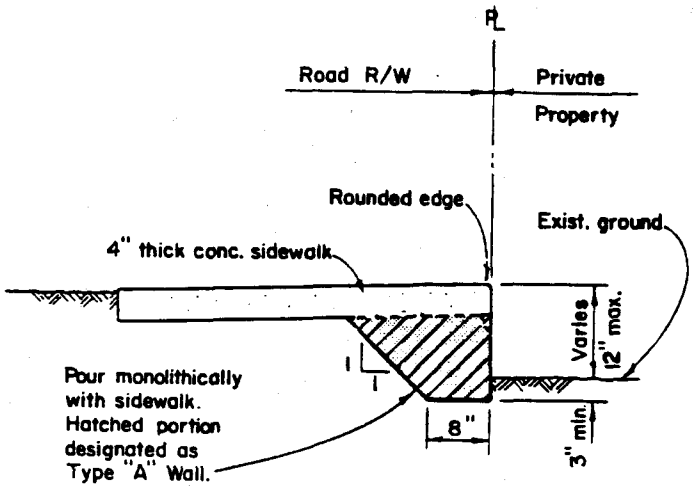

TYPE "A" WALL

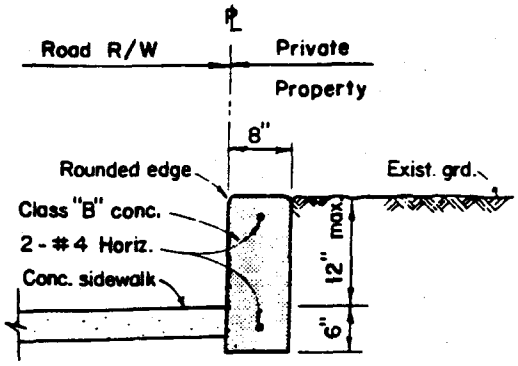

TYPE "B" WALL

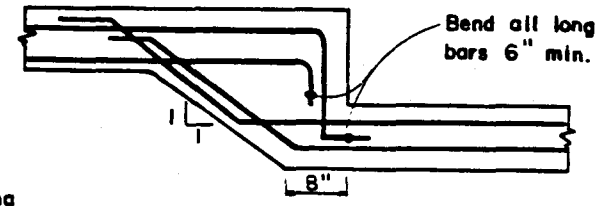

STEP FOOTING DETAIL

Note: Details applicable only for areas with granular soil containing some silt sized material or better soils.

Note: For conditions w/o conc. sidewalk, use top of wall detail as shown on Type "D" wall.

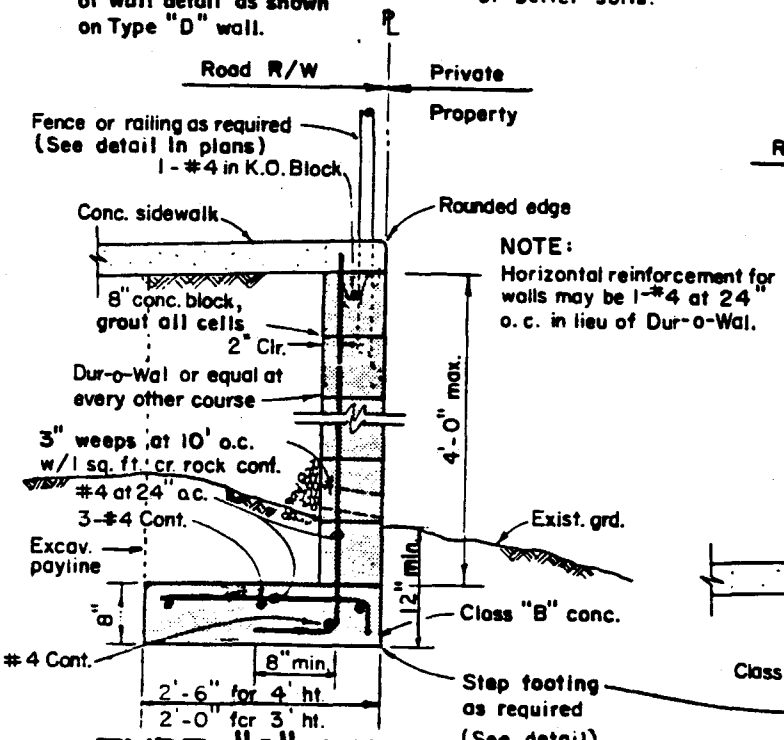

TYPE "C" WALL

NOTE:
Horizontal reinforcement for walls may be 1-#4 at 24" o.c. in lieu of Dur-o-Wal.

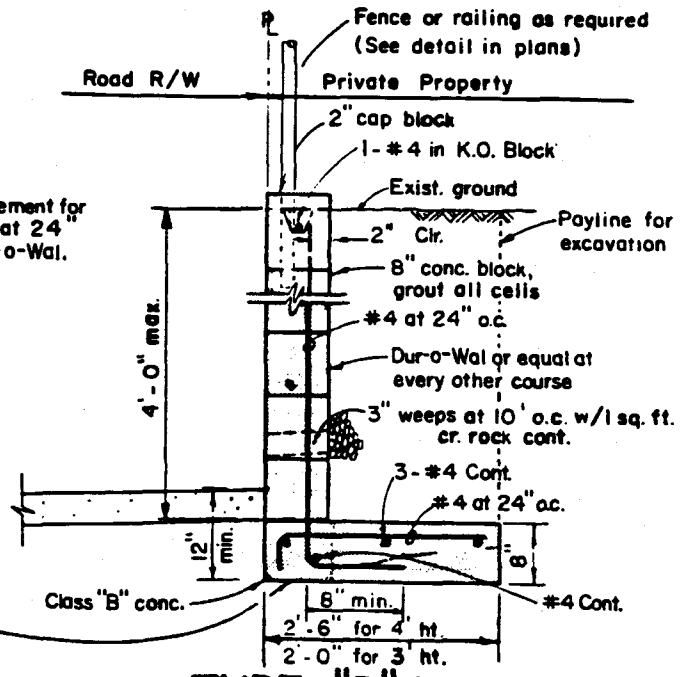

TYPE "D" WALL

CITY & COUNTY OF HONOLULU COUNTY OF MAUI	GRADE ADJUSTMENT WALLS SCALE: 1/2" = 1'-0" SEPTEMBER 1984	STANDARD DETAILS	R-31

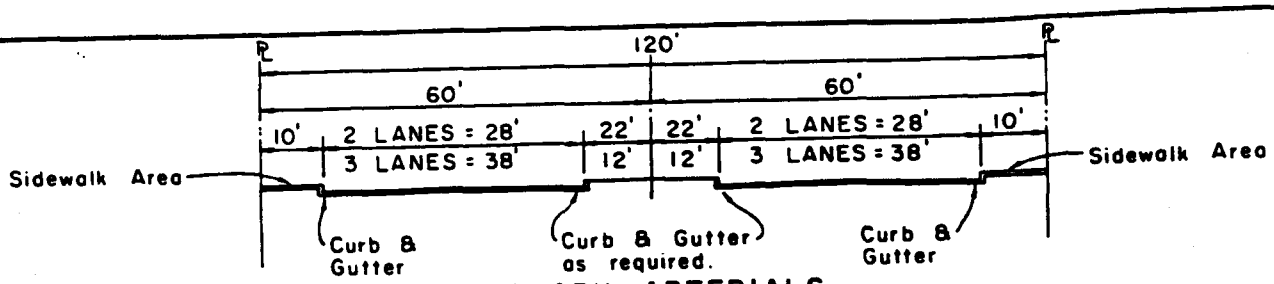

PRIMARY ARTERIALS

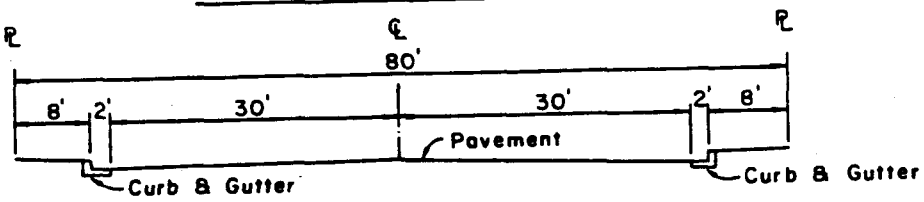

SECONDARY ARTERIALS

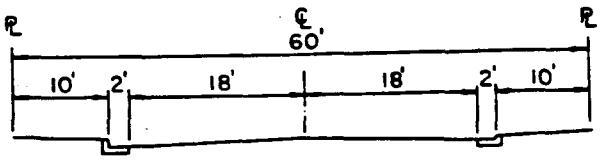

BUSINESS & INDUSTRIAL STREETS

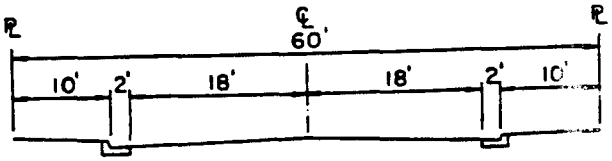

COLLECTOR STREETS

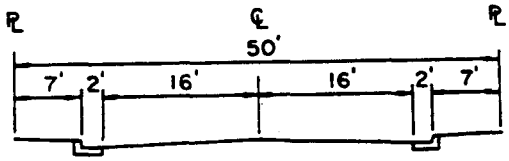

MINOR STS. & CUL-DE-SAC

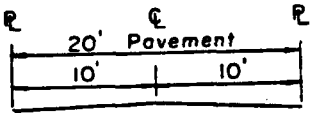

ALLEY

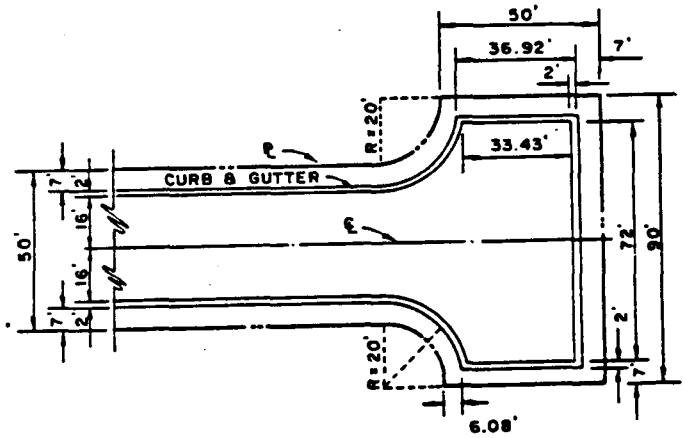

"T" TURNAROUND

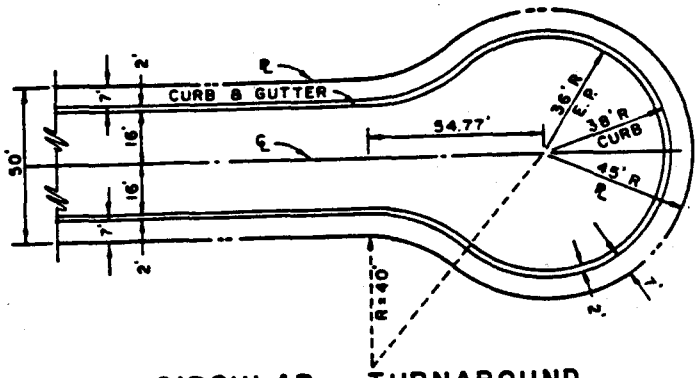

CIRCULAR TURNAROUND

CUL-DE-SAC

NOTE:
All R/W widths shown hereon are minimum.
See R-34 for Road Pavement and Sidewalk Detail.

STREET CROSS SECTIONS WITH SIDEWALK

R-32	STANDARD DETAILS	STREET CROSS-SECTIONS WITH SIDEWALK SEPTEMBER 1984 NOT TO SCALE	COUNTY OF HAWAII

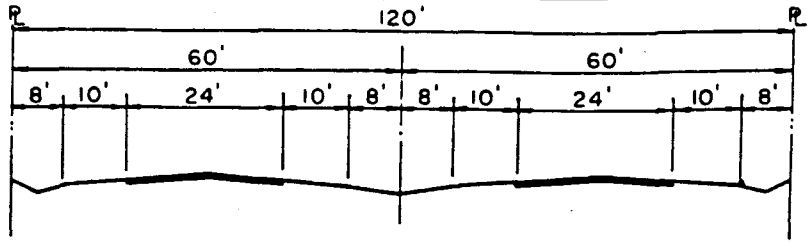

PRIMARY ARTERIALS

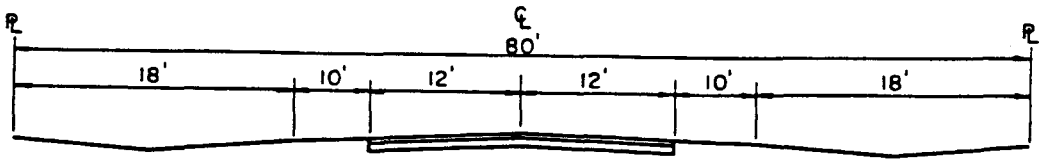

SECONDARY ARTERIALS

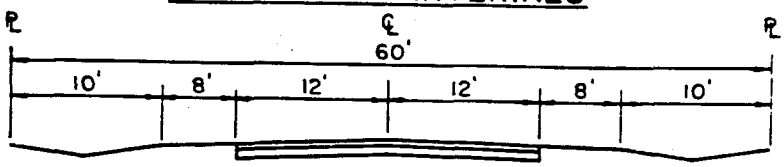

BUSINESS & INDUSTRIAL STS.

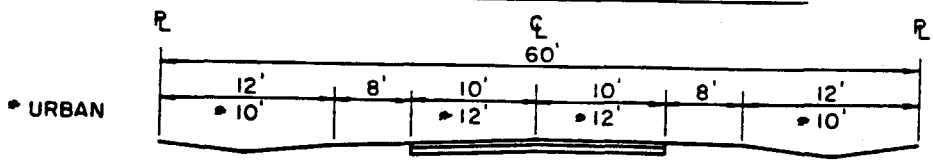

COLLECTOR STREETS

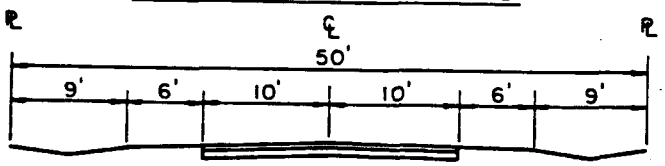

MINOR STREETS & CUL-DE-SAC

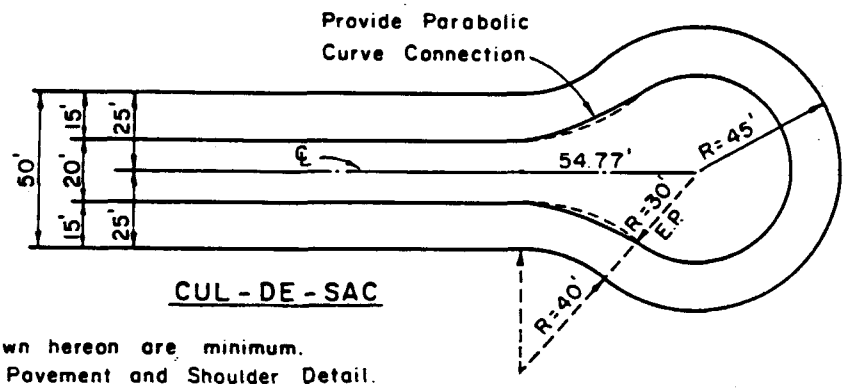

CUL-DE-SAC

NOTE:
All R/W widths shown hereon are minimum.
See R-34 for Road Pavement and Shoulder Detail.

STREET CROSS SECTIONS WITHOUT SIDEWALK

COUNTY OF HAWAII	STREET CROSS-SECTIONS WITHOUT SIDEWALK NOT TO SCALE SEPTEMBER 1984	STANDARD DETAILS	R-33

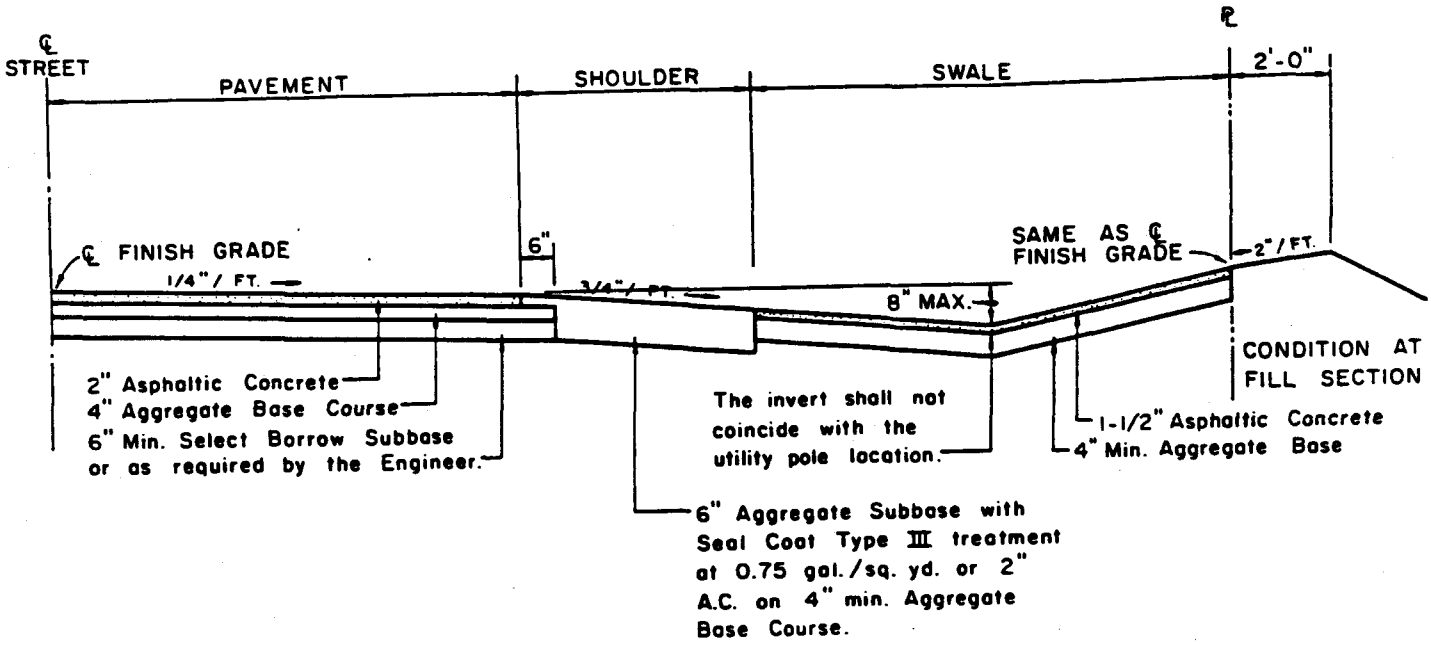

HALF SECTION OF STREET WITH SHOULDER

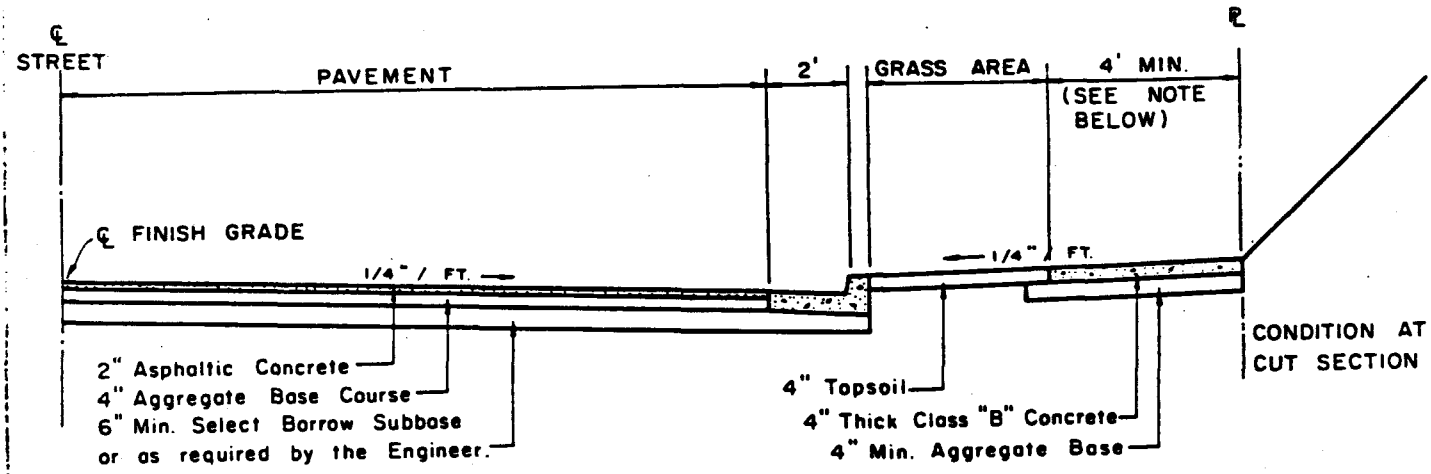

NOTE:
Provide full width sidewalk at commercial, industrial and resort areas or as modified by the Chief Engineer.

HALF SECTION OF STREET WITH SIDEWALK

ROAD PAVEMENTS AND SHOULDERS

R-34	STANDARD DETAILS	ROAD PAVEMENT AND SHOULDERS SEPTEMBER 1984 NOT TO SCALE	COUNTY OF HAWAII

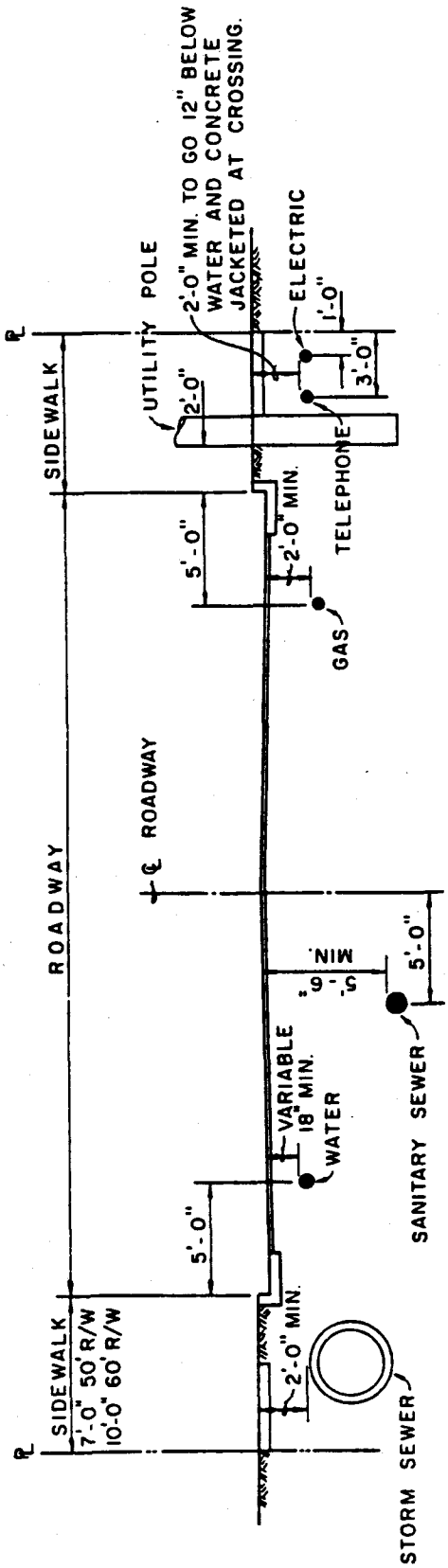

TYPICAL ROADWAY UTILITY LOCATION
WITH SIDEWALK

COUNTY OF HAWAII	TYPICAL ROADWAY UTILITY LOCATION WITH SIDEWALK SCALE: 1/8" = 1'-0" SEPTEMBER 1984	STANDARD DETAILS	R-35

R-36

STANDARD DETAILS

TYPICAL ROADWAY UTILITY LOCATION WITHOUT SIDEWALK

SEPTEMBER 1984

SCALE: 1/8" = 1'-0"

COUNTY OF HAWAII

NOTE:

UTILITY BOXES SHALL BE CONSTRUCTED FLUSH WITH THE FINISHED GRADE OF THE SWALE.

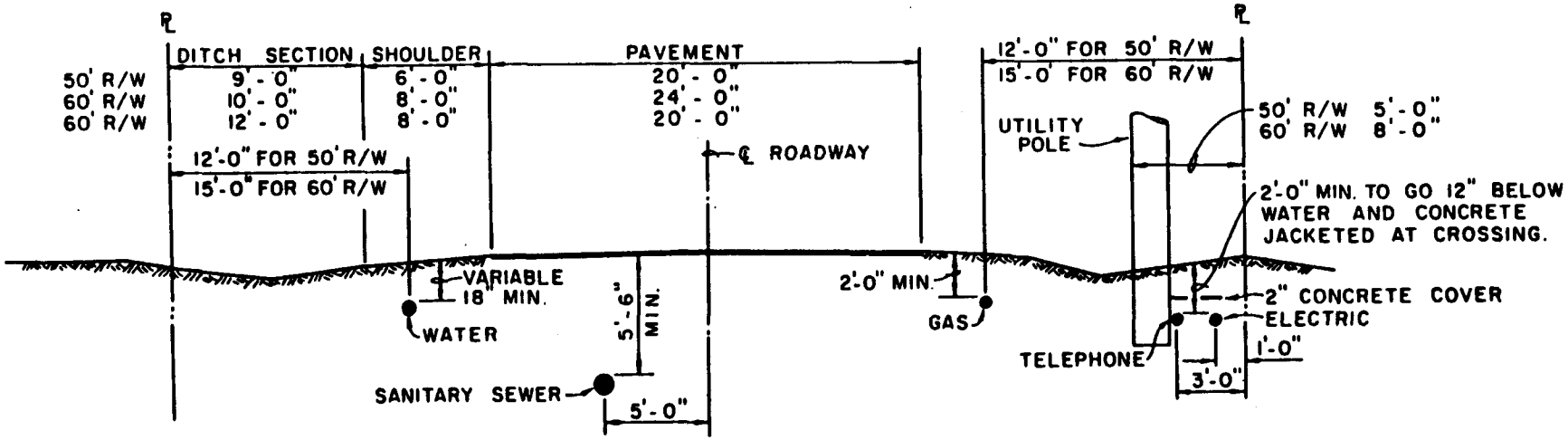

TYPICAL ROADWAY UTILITY LOCATION WITHOUT SIDEWALK

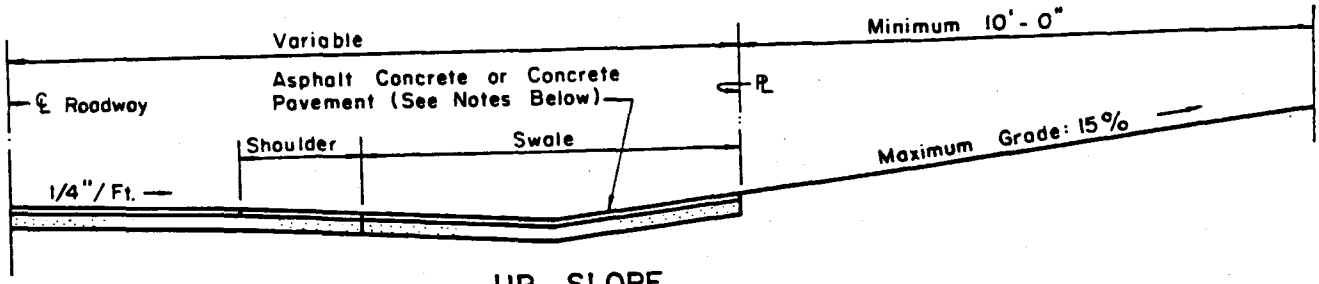

UP SLOPE

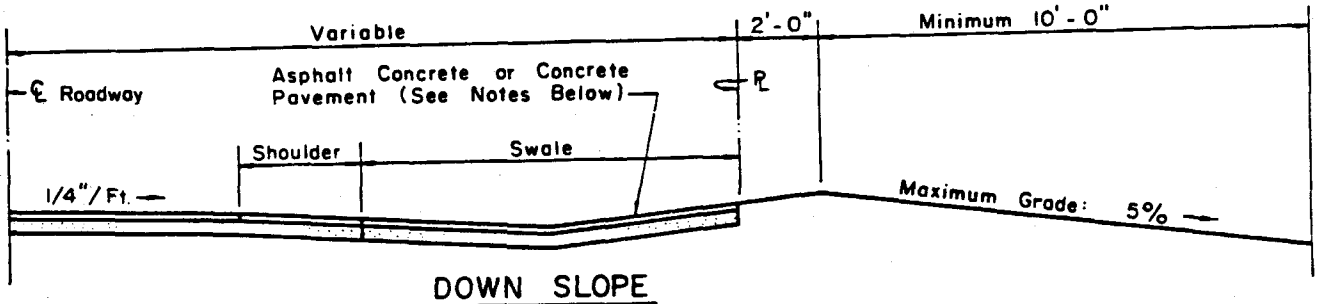

DOWN SLOPE

NOTES:

Concrete Pavement

1. 4" (Residential)-reinforced with 6x6-10/10 wire fabric, 6" (Commercial)-reinforced with 6x6-6/6 wire fabric, shall be constructed with 4" (min.) base course.
2. Provide construction joint at property line.

Asphalt Concrete Pavement

1. The structural section shall consist of 2" a. c. with 4" min. base course.

RESIDENTIAL DRIVEWAY WITHOUT CURB & GUTTER

COUNTY OF HAWAII	RESIDENTIAL DRIVEWAY WITHOUT CURB AND GUTTER NOT TO SCALE SEPTEMBER 1984	STANDARD DETAILS	R-37

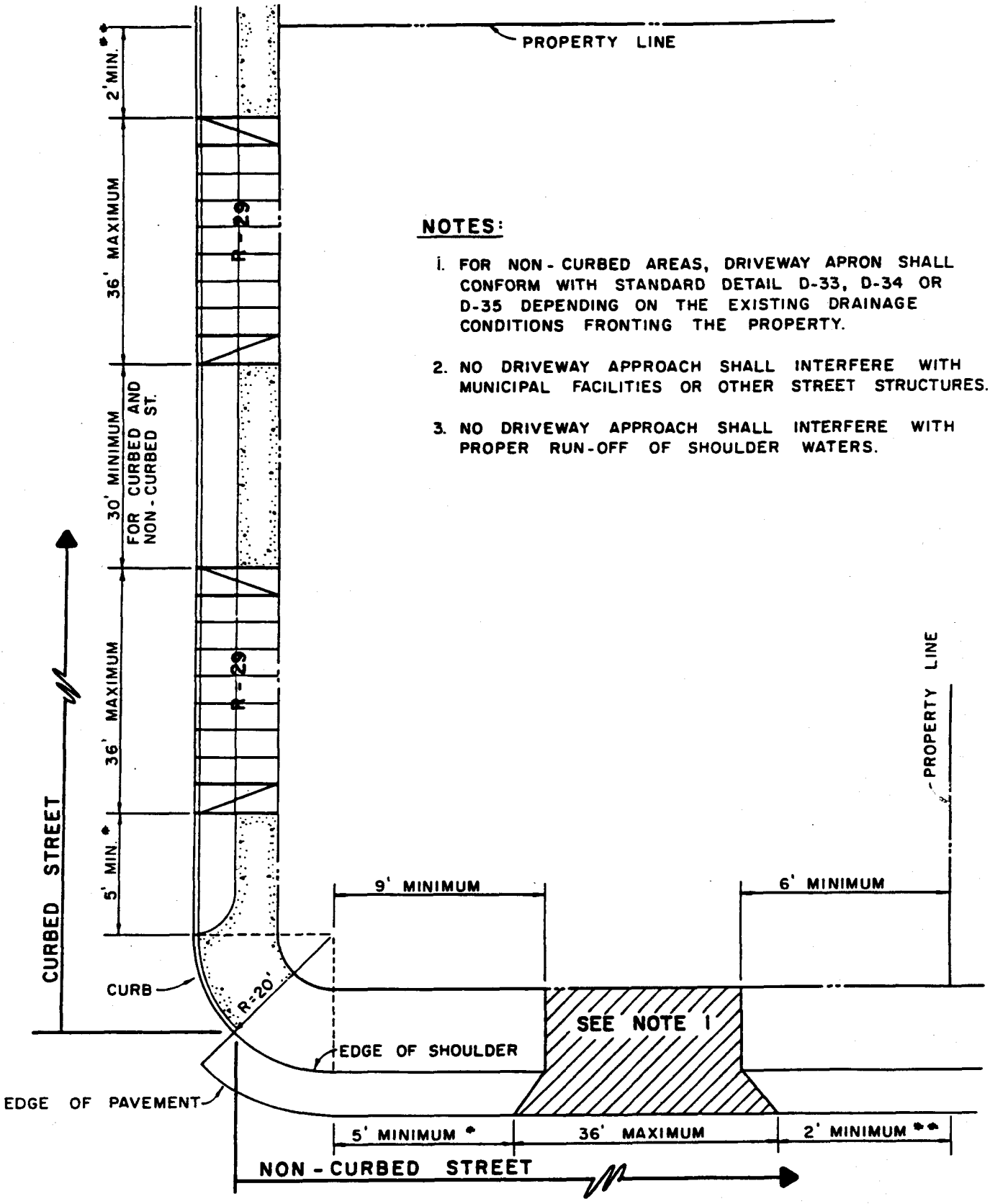

NOTES:

1. FOR NON-CURBED AREAS, DRIVEWAY APRON SHALL CONFORM WITH STANDARD DETAIL D-33, D-34 OR D-35 DEPENDING ON THE EXISTING DRAINAGE CONDITIONS FRONTING THE PROPERTY.
2. NO DRIVEWAY APPROACH SHALL INTERFERE WITH MUNICIPAL FACILITIES OR OTHER STREET STRUCTURES.
3. NO DRIVEWAY APPROACH SHALL INTERFERE WITH PROPER RUN-OFF OF SHOULDER WATERS.

* NO MINIMUM IF RADIUS IS MORE THAN 30 FEET.
** NO MINIMUM IF FRONTAGE IS LESS THAN 20 FEET.

R-38	STANDARD DETAILS	DRIVEWAY LAYOUT SEPTEMBER 1984 NOT TO SCALE	COUNTY OF HAWAII

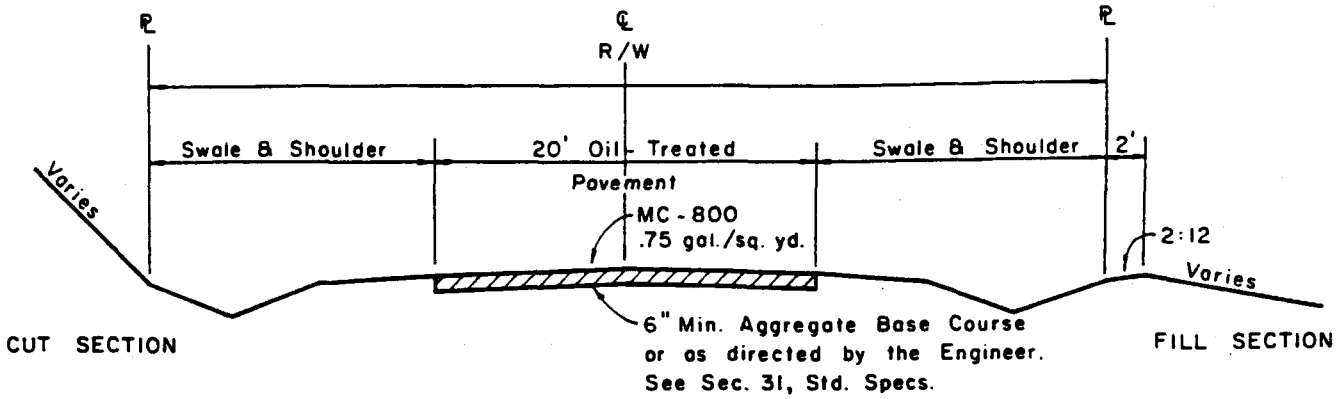

NOTES:

1. This street is only for areas zoned A-3 and over.
2. The oil-treatment shall conform to Section 409-Seal Coat Type 3 of the Dept. of Transportation Std. Specs. for Road & Bridge Construction, except that .4 gal./sq. yd. shall be used for the first application and .35 gal./sq. yd. shall be used for the second application.
3. Where grades are 8% or greater, the roadway section shall be paved as shown in Detail R-34.
4. See Std. Detail R-33 for applicable minimum R/W and pavement widths.

AGRICULTURAL STREET

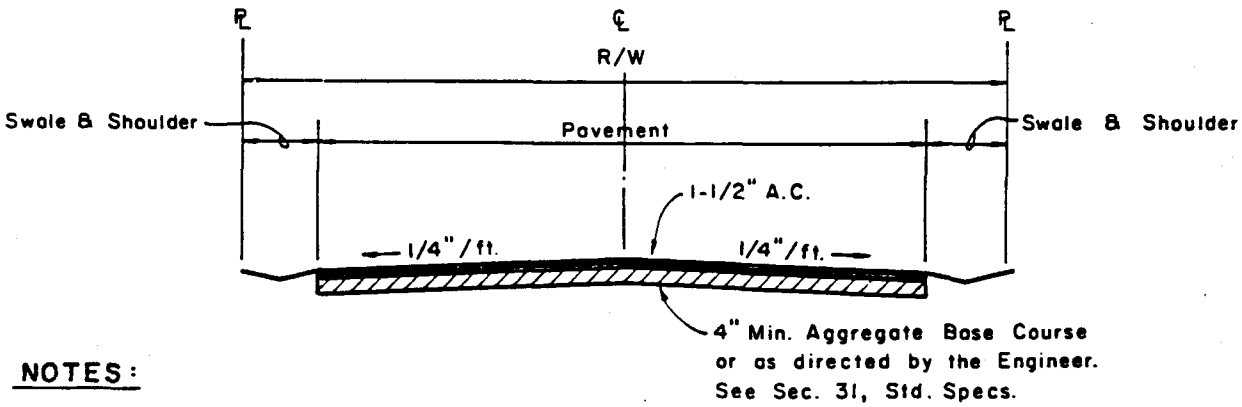

NOTES:

1. This street is for residential and Ag-1 lots and shall not provide access to more than six (6) lots.
2. Minimum pavement and R/W widths shall be as follows:

Access (Lots)	Pavement Width	R/W Width
1	8'	12'
2	12'	16'
3	14'	18'
4 to 6	16'	20'

3. Maximum grade = 20%.
4. 4" thick concrete reinforced by 6 x 6-10/10 WWM on 4" min. Aggregate Base Course may be used in lieu of the above section.
5. The existing drainage pattern shall not be altered with respect to adjoining properties.

PRIVATE DEAD-END STREET

NON-DEDICABLE STREETS

COUNTY OF HAWAII	NON-DEDICABLE STREETS NOT TO SCALE SEPTEMBER 1984	STANDARD DETAILS	R-39

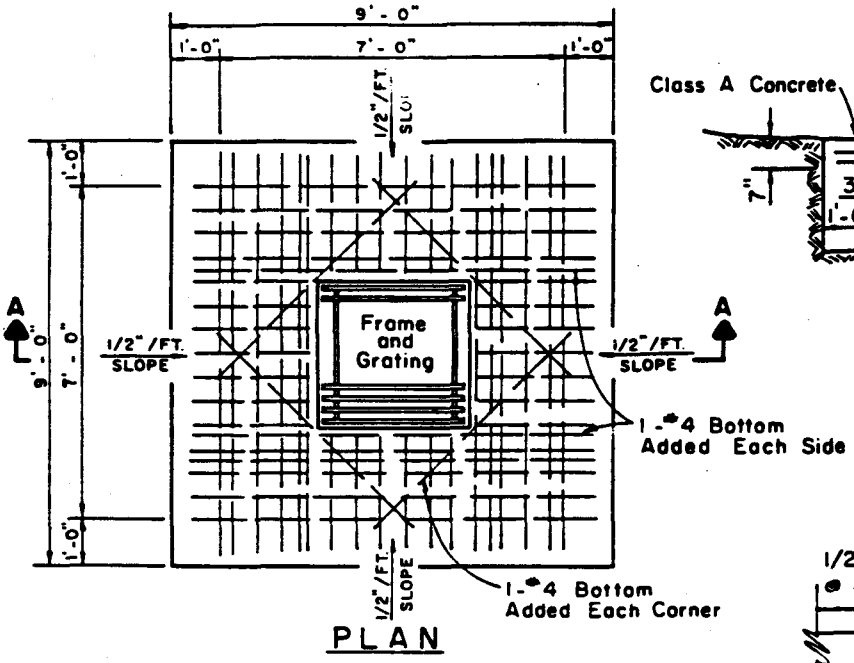

PLAN

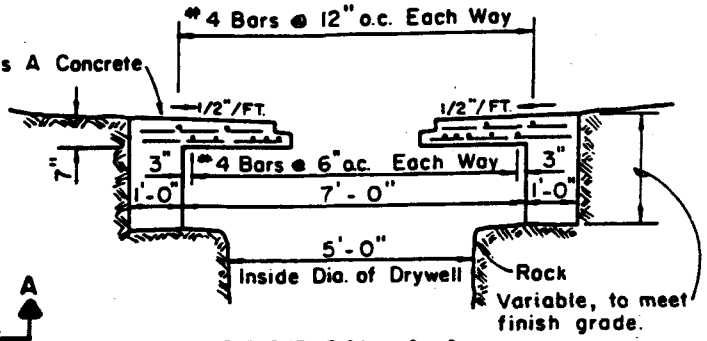

SECTION A-A

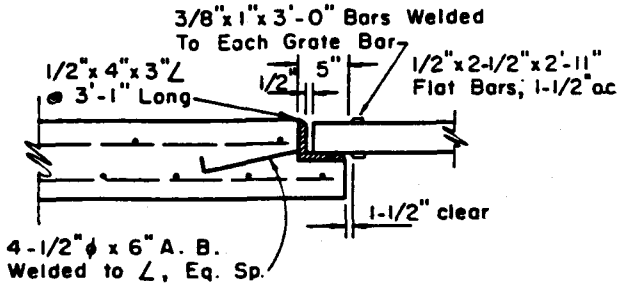

SECTION C-C

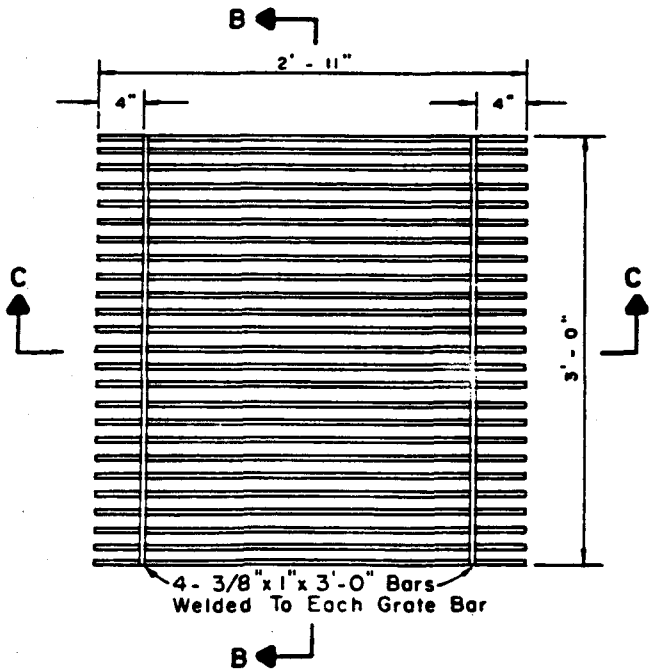

GRATING

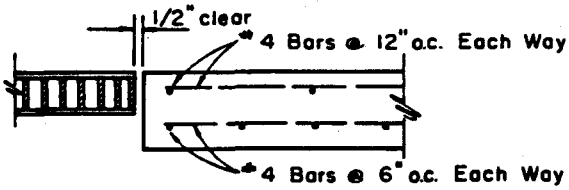

SECTION B-B

NOTES:

1. All weld 5/16".
2. All steel shall be structural grade.
3. Grates and frame ∠s shall be hot dip galvanized after fabrication in accordance with ASTM A 123.
4. Minimum depth shall be 20'-0" or as directed by the Engineer.
5. RM-1 Delineator shall be placed as directed by the Engineer.

DRY WELL COVER

R-40	STANDARD DETAILS	DRY WELL COVER SEPTEMBER 1984 NOT TO SCALE	COUNTY OF HAWAII

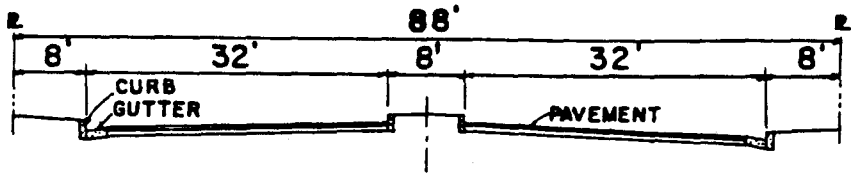

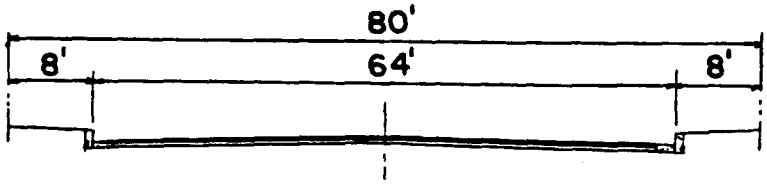

MAJOR THOROUGHFARES

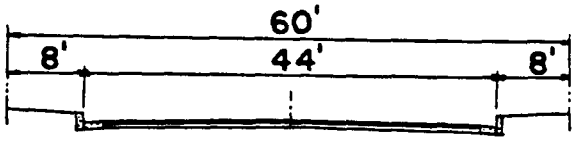

MAJOR STREET

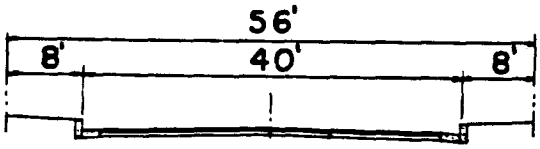

COLLECTOR STREET

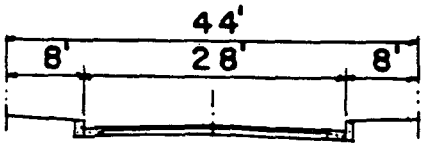

MINOR STREET

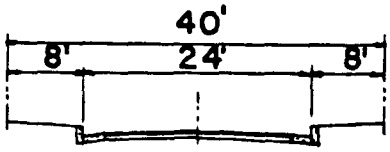

DEAD END STREET

COUNTY OF KAUAI	STREET CROSS-SECTIONS WITH CURB AND GUTTER SCALE: 1" = 20' SEPTEMBER 1984	STANDARD DETAILS	R-41

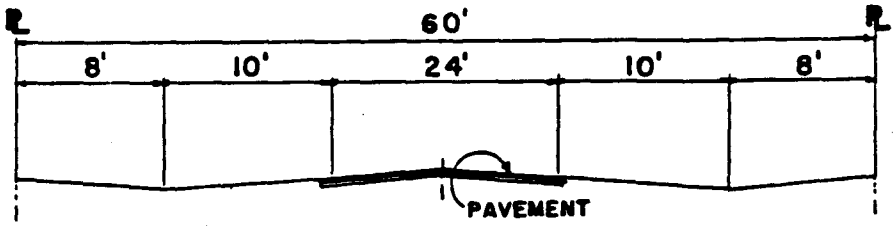

MAJOR STREET

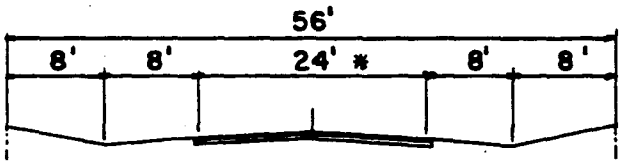

* MINIMUM PAVEMENT WIDTH FOR AGRICULTURAL ROADWAYS IS 16 FEET.

COLLECTOR STREET

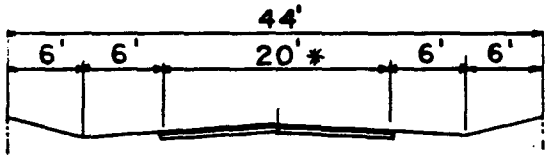

MINOR STREET

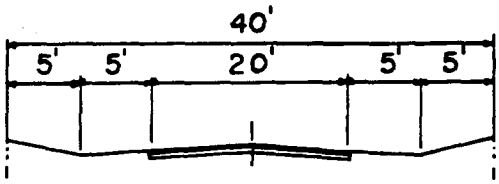

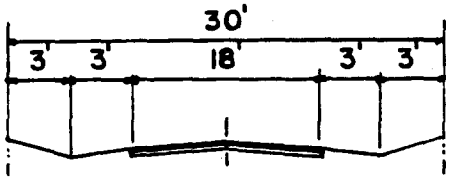

DEAD END STREETS

R-42	STANDARD DETAILS	STREET CROSS-SECTIONS WITHOUT CURB AND GUTTER SEPTEMBER 1984 NOT TO SCALE	COUNTY OF KAUAI

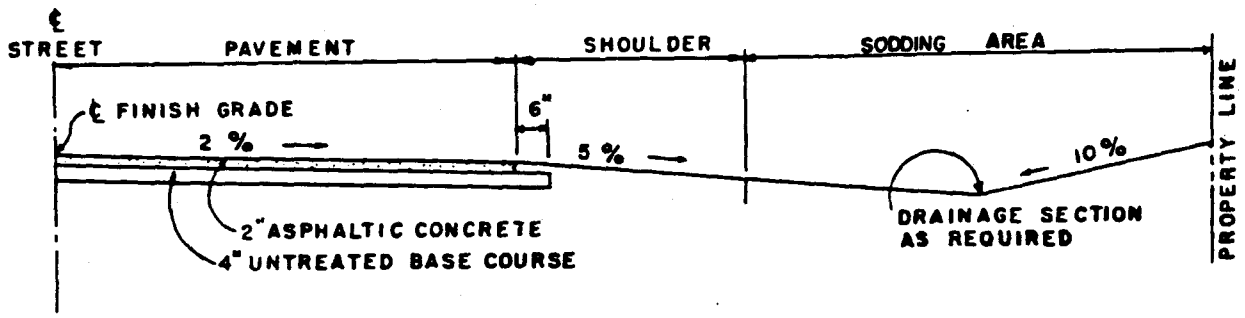

HALF SECTION OF STREET WITH SHOULDER

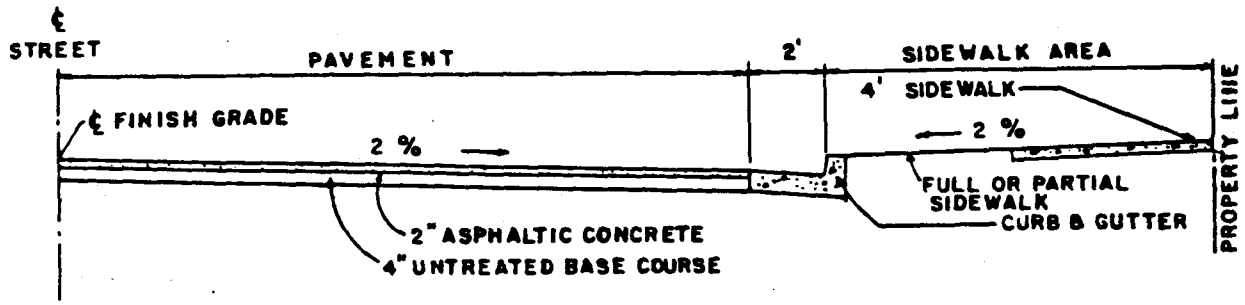

HALF SECTION OF STREET WITH SIDEWALK

COUNTY OF KAUAI	ROAD PAVEMENTS AND SHOULDERS NOT TO SCALE SEPTEMBER 1984	STANDARD DETAILS	R-43

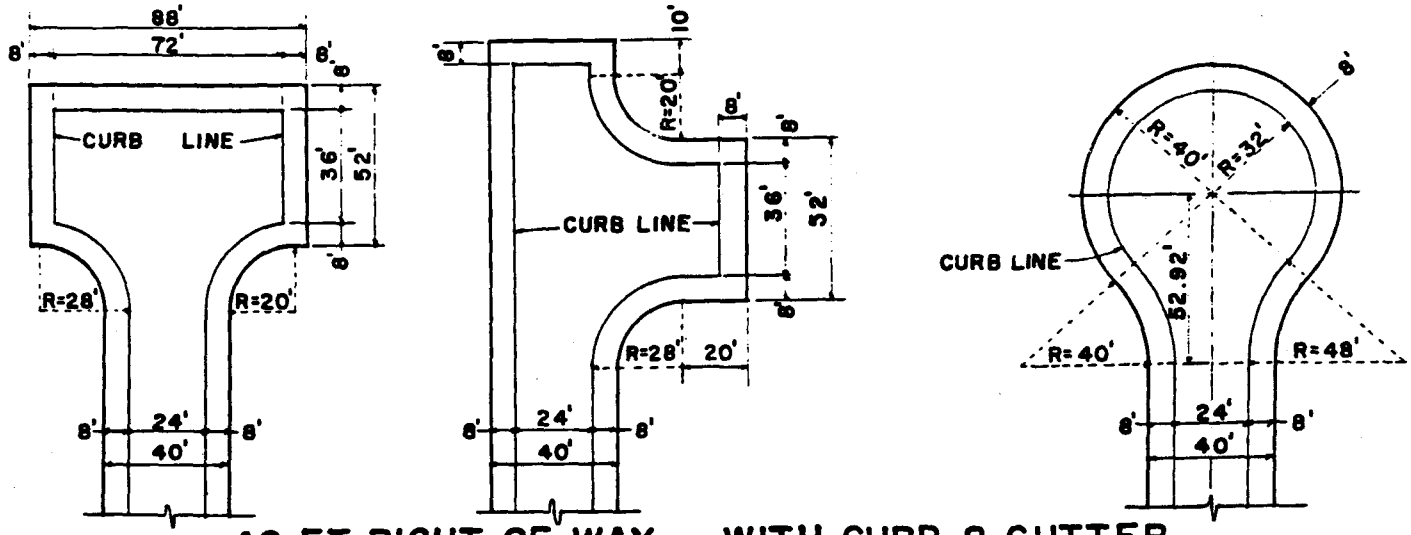

40 FT. RIGHT OF WAY — WITH CURB & GUTTER

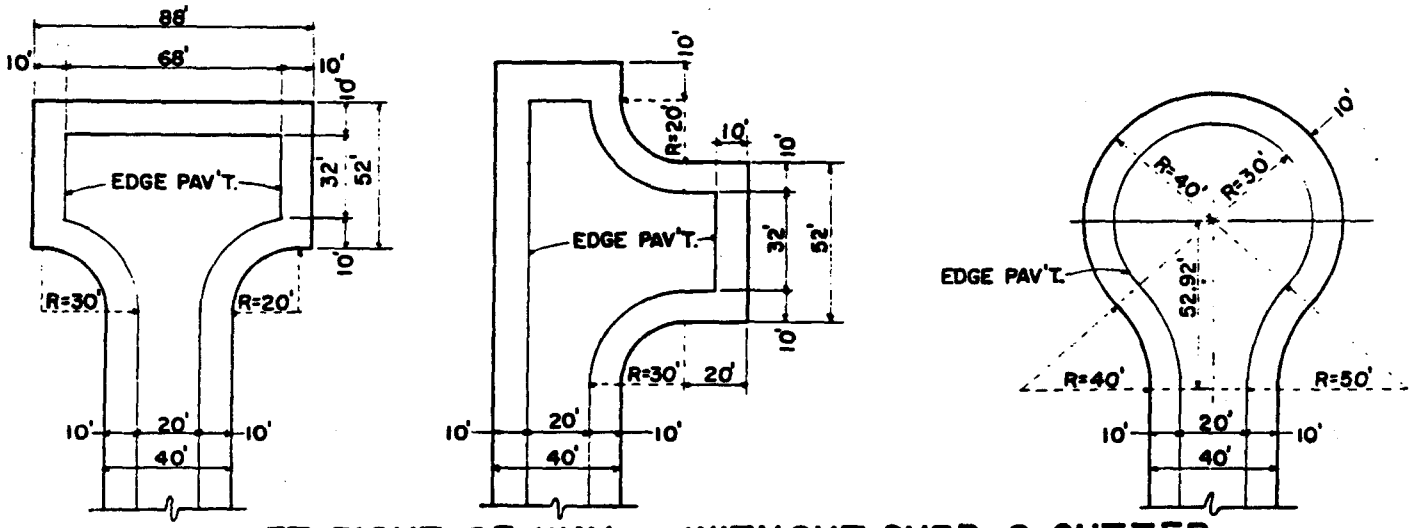

40 FT. RIGHT OF WAY — WITHOUT CURB & GUTTER

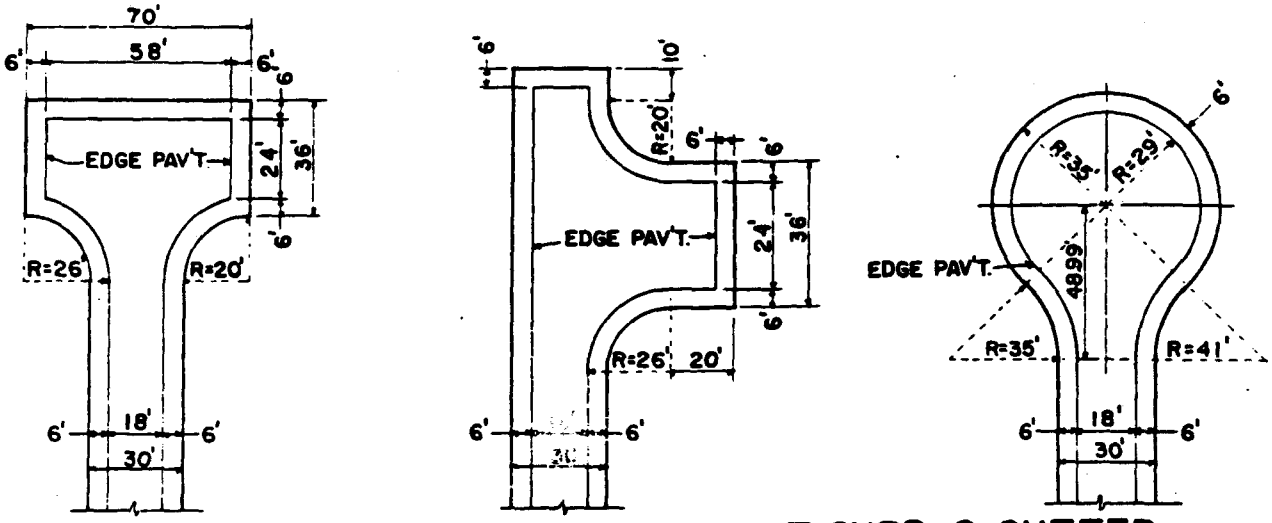

30 FT. RIGHT OF WAY — WITHOUT CURB & GUTTER

R-44	STANDARD DETAILS	CUL-DE-SAC SEPTEMBER 1984 NOT TO SCALE	COUNTY OF KAUAI

COUNTY OF KAUAI

TAPERED ROAD INTERSECTION

NOT TO SCALE

SEPTEMBER 1984

STANDARD DETAILS

R-45

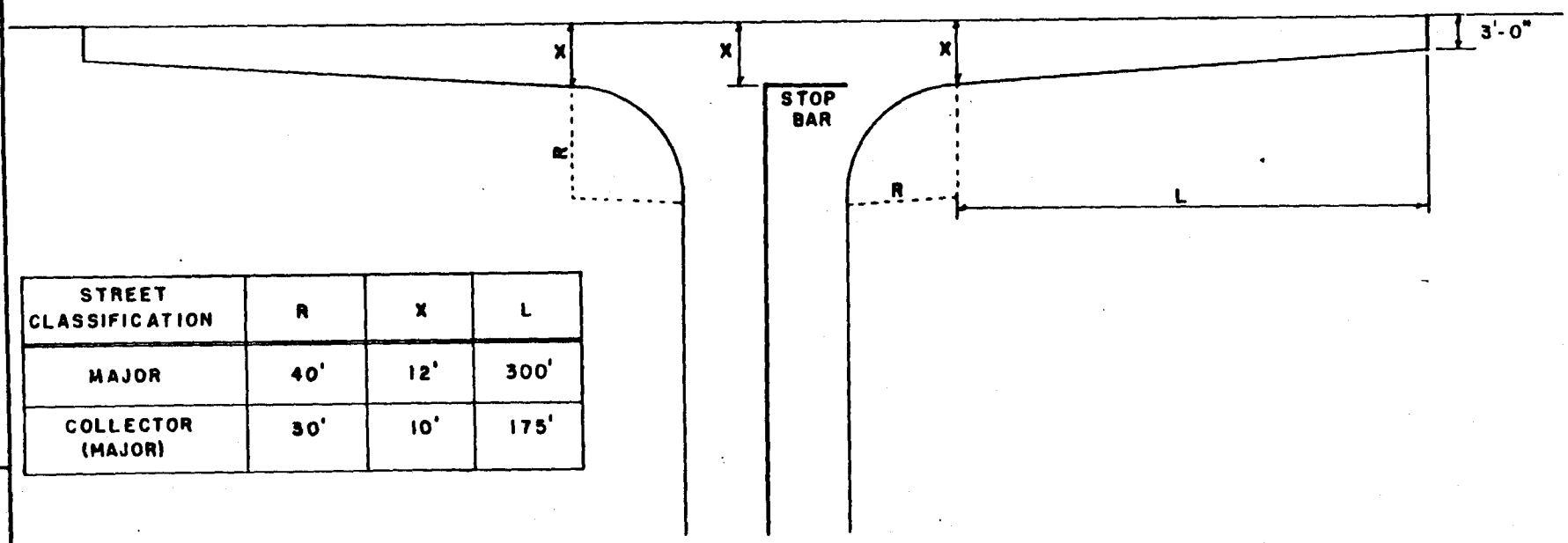

STREET CLASSIFICATION	R	X	L
MAJOR	40'	12'	300'
COLLECTOR (MAJOR)	30'	10'	175'

COLLECTOR RD. (MAJOR)- NORMALLY OUTSIDE SUBDIVISION AREA

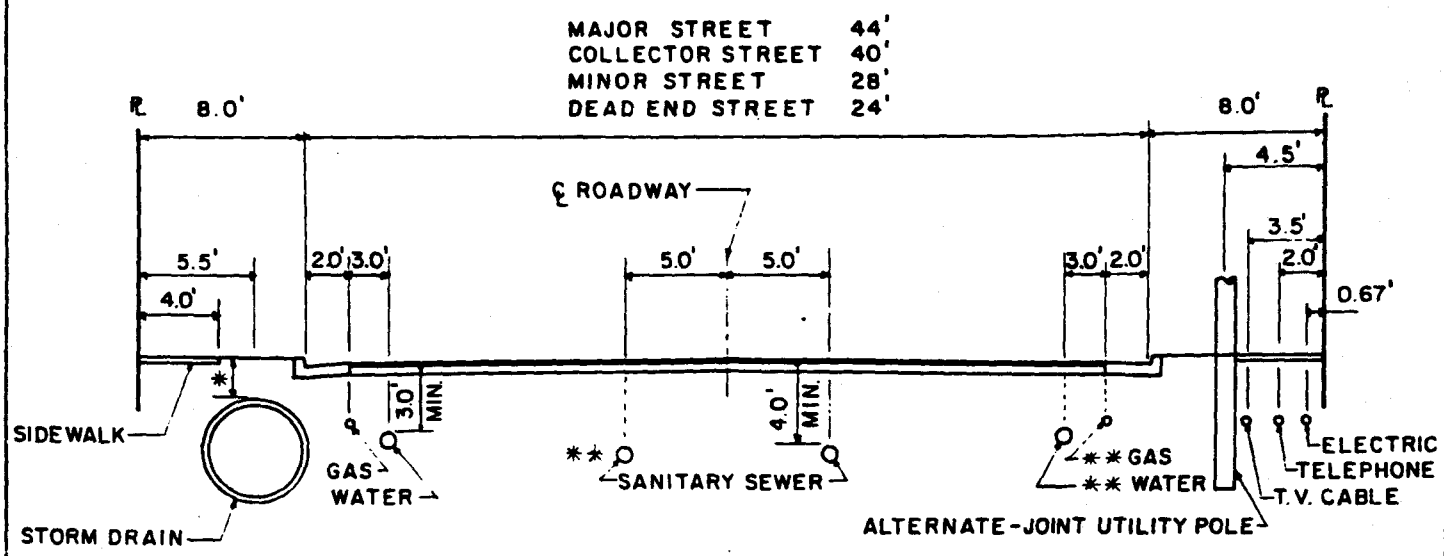

WITH CURB & GUTTER

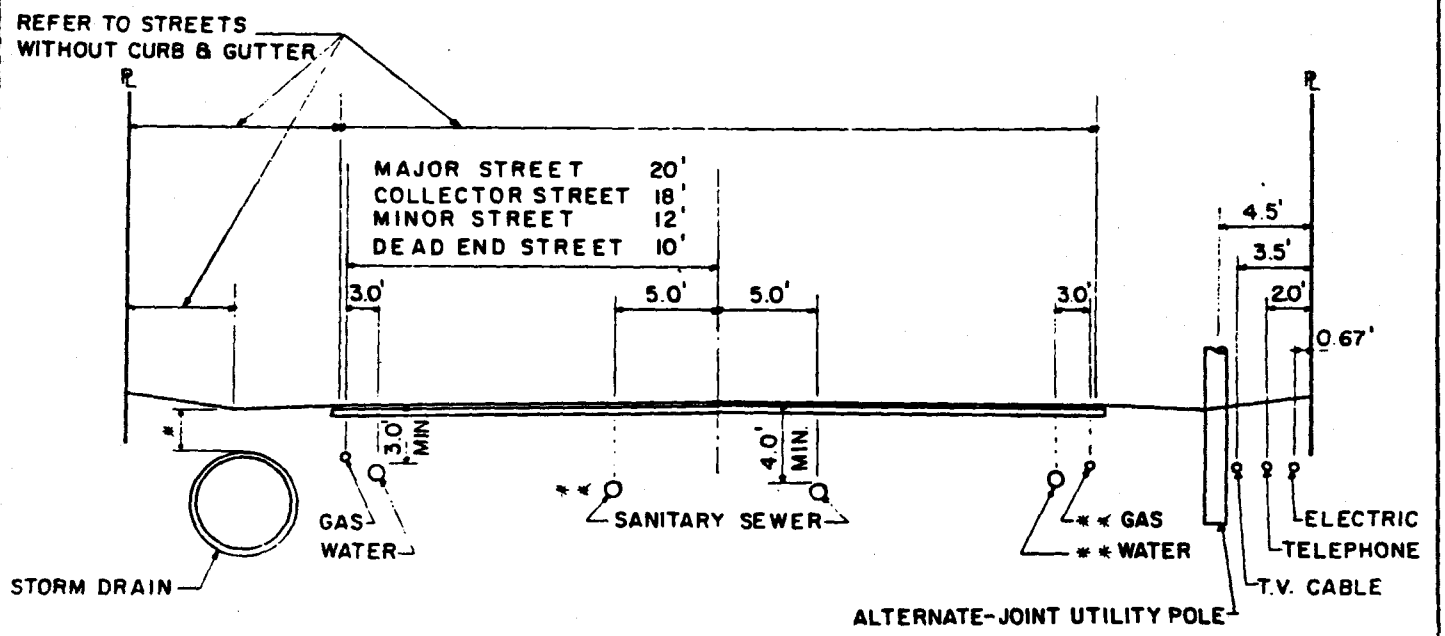

WITHOUT CURB & GUTTER

NOTES:

1. MAINLINE UTILITIES SHALL HAVE A MINIMUM COVER OF 2.5' UNLESS OTHERWISE SPECIFIED.
2. * WHEREVER POSSIBLE THE STORM DRAIN SHALL HAVE A MINIMUM COVER OF 3.0'.
3. ** ALTERNATE LOCATION OF UTILITIES.

R-46	STANDARD DETAILS	TYPICAL ROADWAY UTILITY LOCATION SEPTEMBER 1984 NOT TO SCALE	COUNTY OF KAUAI

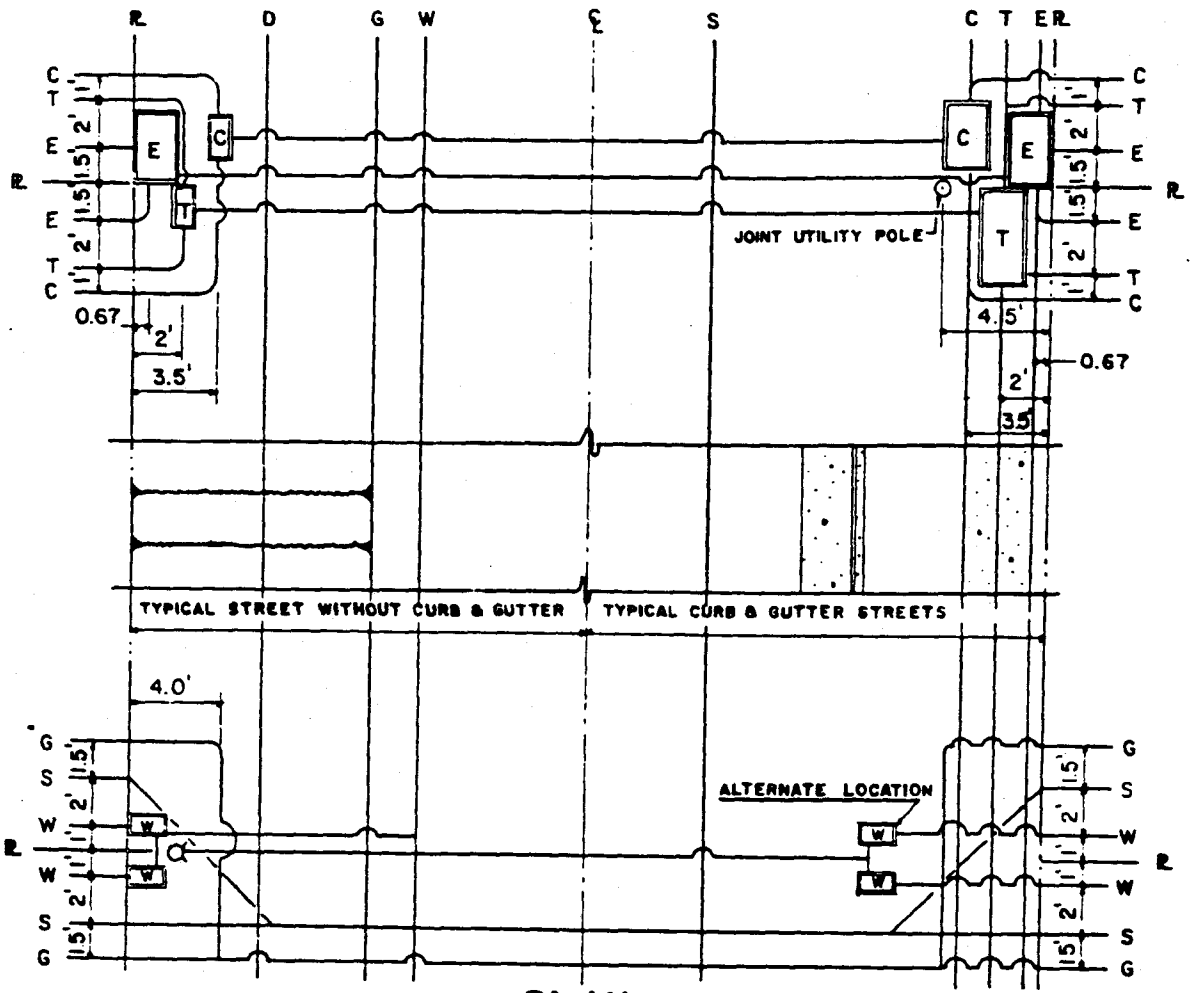

PLAN

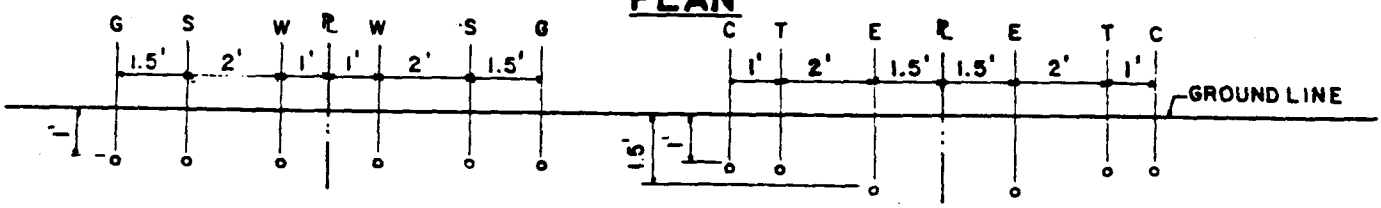

SECTION

NOTES

1. WHEN ELECTRICAL TRANSFORMERS INTERFERES WITH LOCATION THE UTILITIES SHALL BE PLACED OUTSIDE THE TRANSFORMER AT THE DISTANCES NOTED ON THE PLANS.
2. WHENEVER POSSIBLE STORM DRAIN INLETS AND MANHOLES SHALL BE LOCATED AWAY FROM THE COMMON PROPERTY BOUNDARY LINES.

LEGEND

C	T V CABLE
D	STORM DRAIN
E	ELECTRIC (UNDERGROUND)
G	GAS
S	SANITARY SEWER
T	TELEPHONE (UNDERGROUND)
W	WATER
℞	PROPERTY LINE
♂	FIRE HYDRANT

COUNTY OF KAUAI	SPACE ALLOCATION FOR UNDERGROUND UTILITIES SCALE: 1/4" = 1'-0" SEPTEMBER 1984	STANDARD DETAILS	R-47

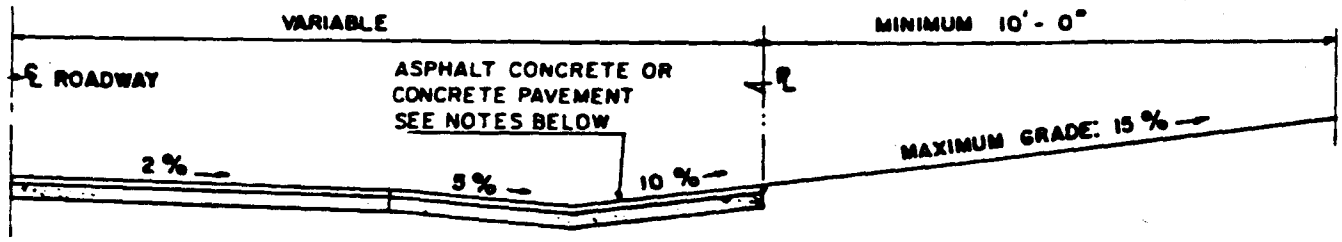

UP SLOPE

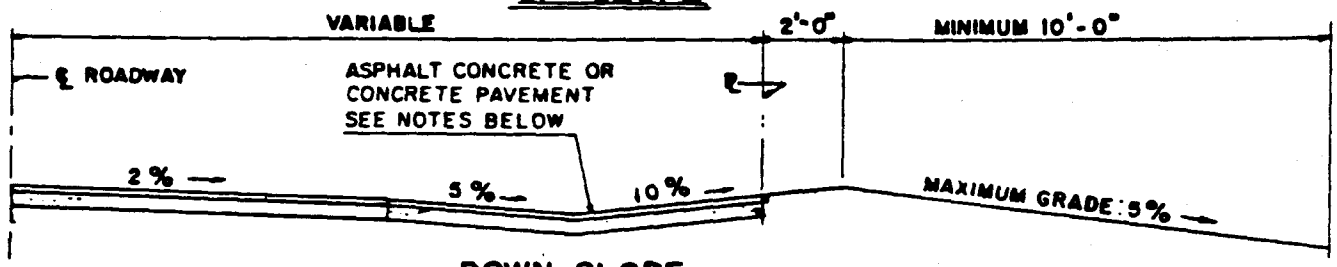

DOWN SLOPE

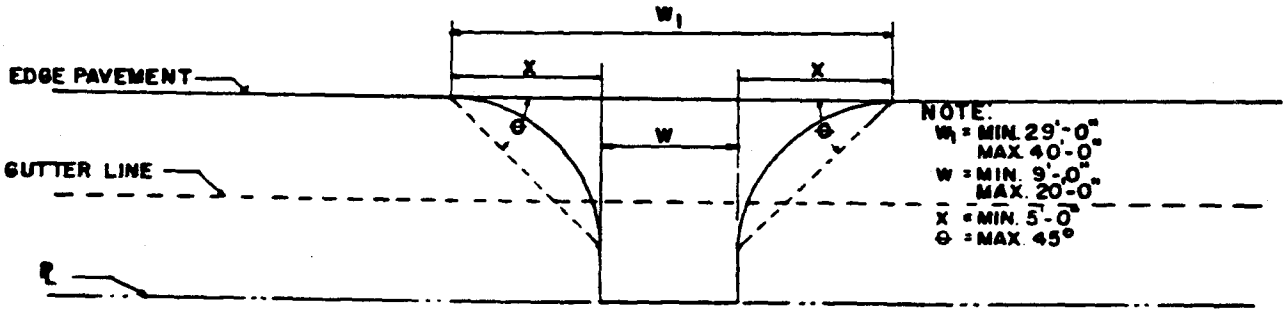

PLAN

NOTES:

CONCRETE PAVEMENT

1. 4" (RESIDETIAL), 6" (COMMERCIAL) - REINFORCED WITH 6X6-6/6 WIRE FABRIC SHALL BE CONSTRUCTED.
2. PROVIDE CONSTRUCTION JOINTS AT EDGE PAVEMENT AND PROPERTY LINE.
3. THE MINIMUM WIDTH (W_1) AT THE EDGE OF PAVEMENT FOR ANY WIDTH OF DRIVEWAY SHALL BE NOT LESS THAN 29 FEET NOR MORE THAN 40 FEET.

ASPHALT CONCRETE PAVEMENT

1. THE STRUCTURAL SECTION SHALL CONSIST OF 2" A C WITH 4" BASE COURSE

R-48	STANDARD DETAILS	RESIDENTIAL DRIVEWAY WITHOUT CURB AND GUTTER SEPTEMBER 1984 NOT TO SCALE	COUNTY OF KAUAI

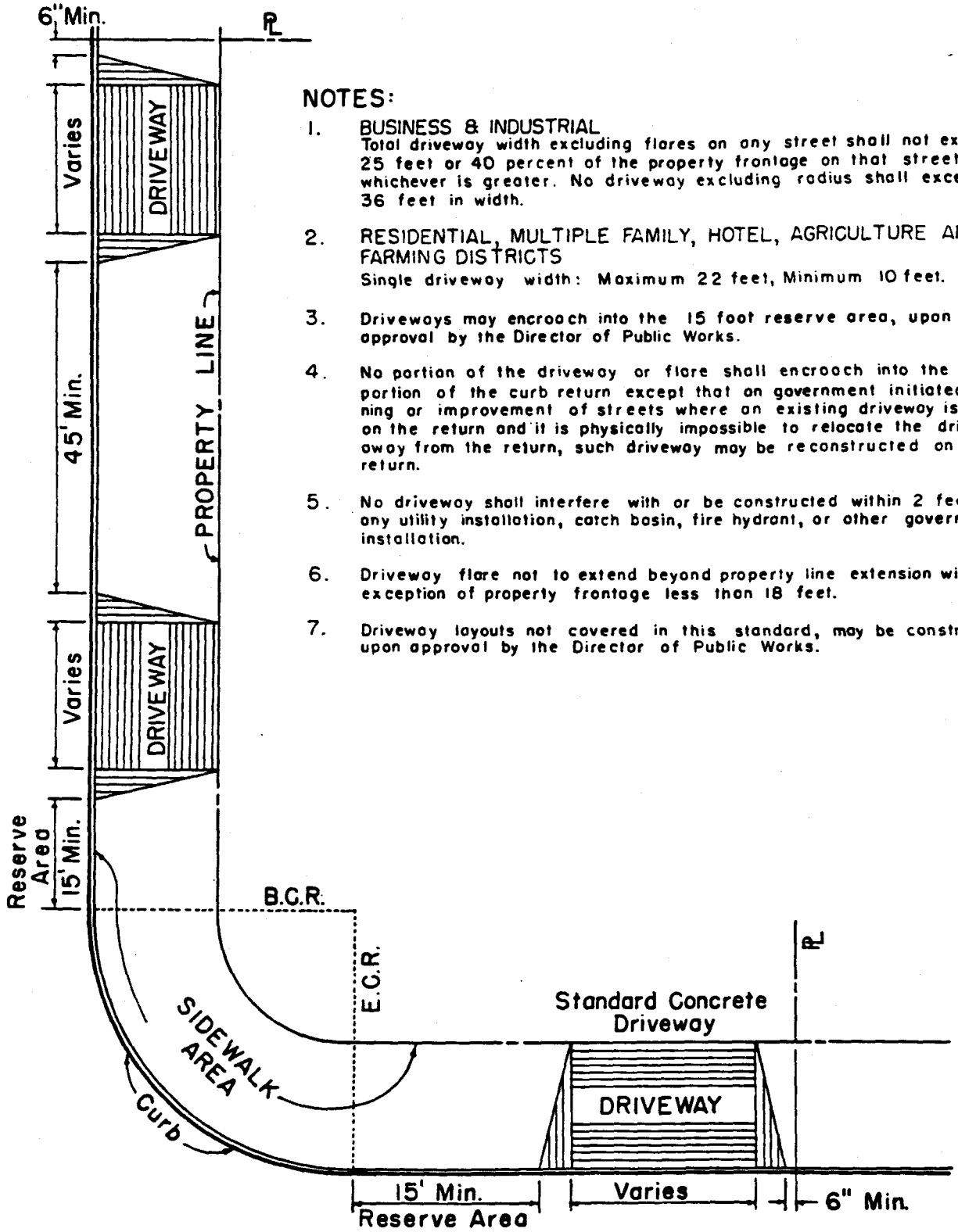

NOTES:

1. BUSINESS & INDUSTRIAL
   Total driveway width excluding flares on any street shall not exceed 25 feet or 40 percent of the property frontage on that street, whichever is greater. No driveway excluding radius shall exceed 36 feet in width.

2. RESIDENTIAL, MULTIPLE FAMILY, HOTEL, AGRICULTURE AND FARMING DISTRICTS
   Single driveway width: Maximum 22 feet, Minimum 10 feet.

3. Driveways may encroach into the 15 foot reserve area, upon approval by the Director of Public Works.

4. No portion of the driveway or flare shall encroach into the curved portion of the curb return except that on government initiated widening or improvement of streets where an existing driveway is located on the return and it is physically impossible to relocate the driveway away from the return, such driveway may be reconstructed on the return.

5. No driveway shall interfere with or be constructed within 2 feet of any utility installation, catch basin, fire hydrant, or other government installation.

6. Driveway flare not to extend beyond property line extension with the exception of property frontage less than 18 feet.

7. Driveway layouts not covered in this standard, may be constructed upon approval by the Director of Public Works.

STANDARD DRIVEWAY LAYOUTS

FOR CONCRETE CURB STREETS

COUNTY OF MAUI	DRIVEWAY LAYOUTS FOR CONCRETE CURB STREETS NOT TO SCALE SEPTEMBER 1984	STANDARD DETAILS	R-49

TYPICAL SECTION OF DRIVEWAYS

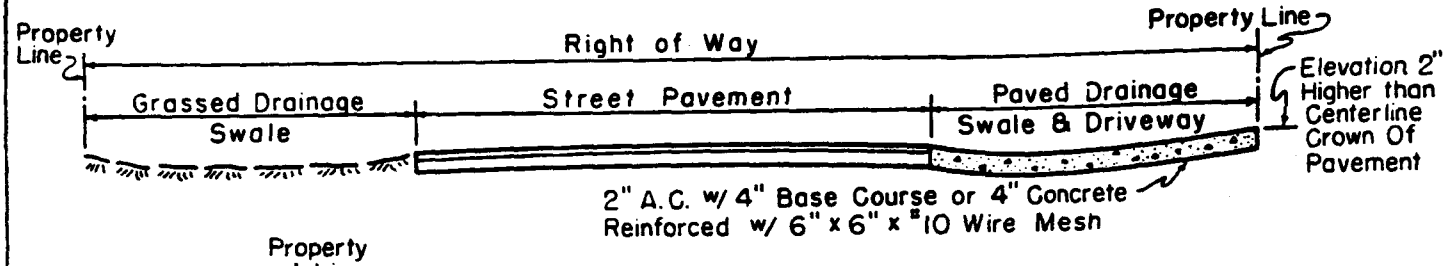

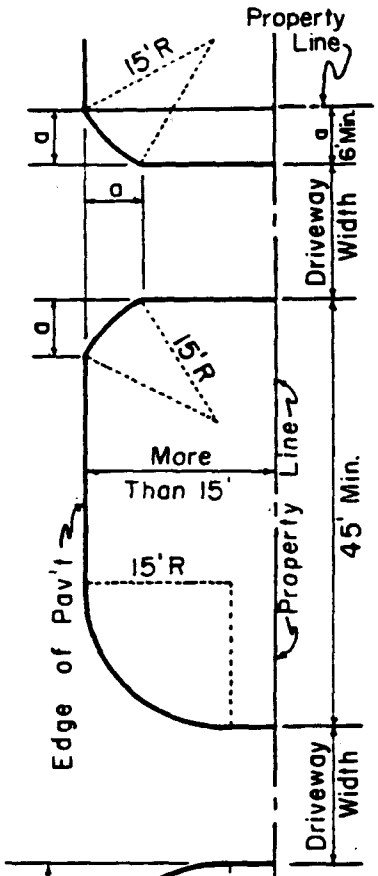

NOTES:

1. BUSINESS & INDUSTRIAL
   Total driveway width excluding flares on any street shall not exceed 25 feet or 40 percent of the property frontage on that street, whichever is greater. No driveway excluding radius shall exceed 36 feet in width.

2. RESIDENTIAL, MULTIPLE FAMILY, HOTEL, AGRICULTURE AND FARMING DISTRICTS
   Single driveway width: Maximum 22 feet, Minimum 10 feet.

3. Driveways may encroach into the 35 foot reserve area, upon approval by the Director of Public Works.

4. No portion of the driveway or flare shall encroach into the curved portion of the curb return except that on government initiated widening or improvement of streets where an existing driveway is located on the return and it is physically impossible to relocate the driveway away from the return, such driveway may be reconstructed on the return.

5. No driveway shall interfere with or be constructed within 2 feet of any utility installation, catch basin, fire hydrant, or other government installation.

6. Driveway flare not to extend beyond property line extension with the exception of property frontage less than 22 feet.

7. Driveway layouts not covered in this standard, may be constructed upon approval by the Director of Public Works.

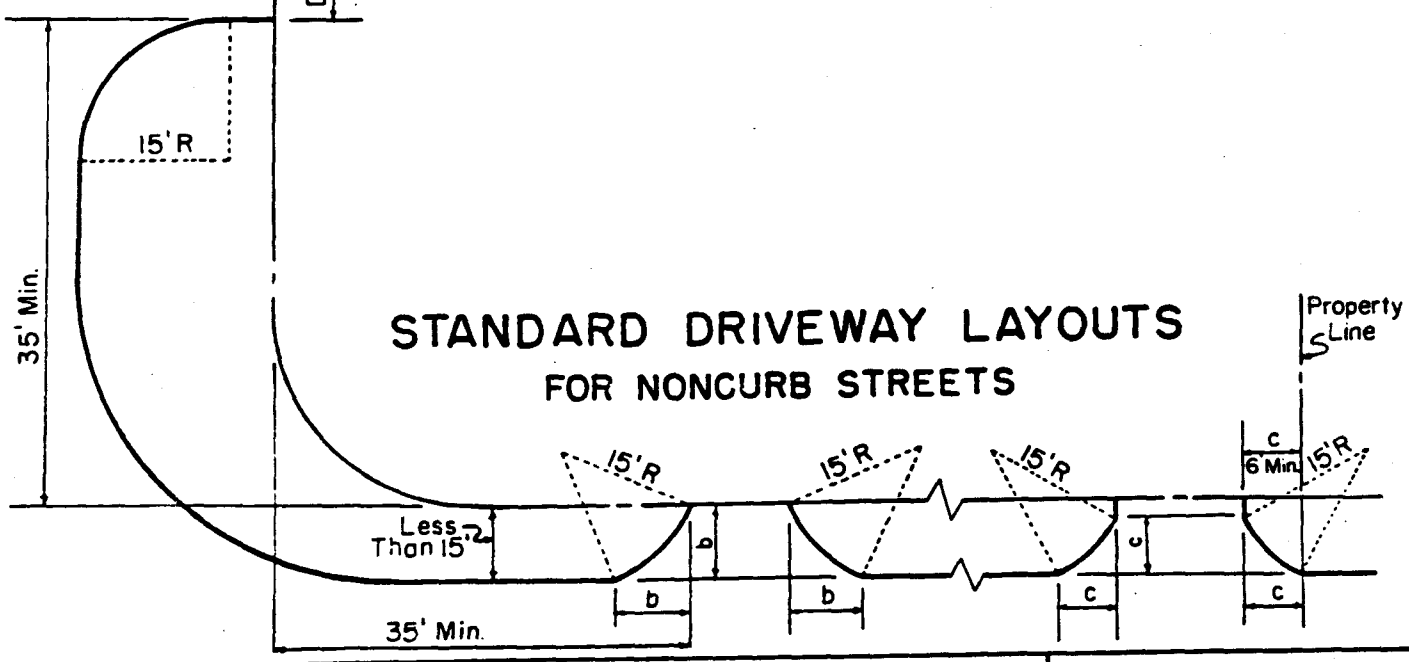

STANDARD DRIVEWAY LAYOUTS
FOR NONCURB STREETS

R-50	STANDARD DETAILS	DRIVEWAY LAYOUTS FOR NON-CURB STREETS SEPTEMBER 1984 NOT TO SCALE	COUNTY OF MAUI

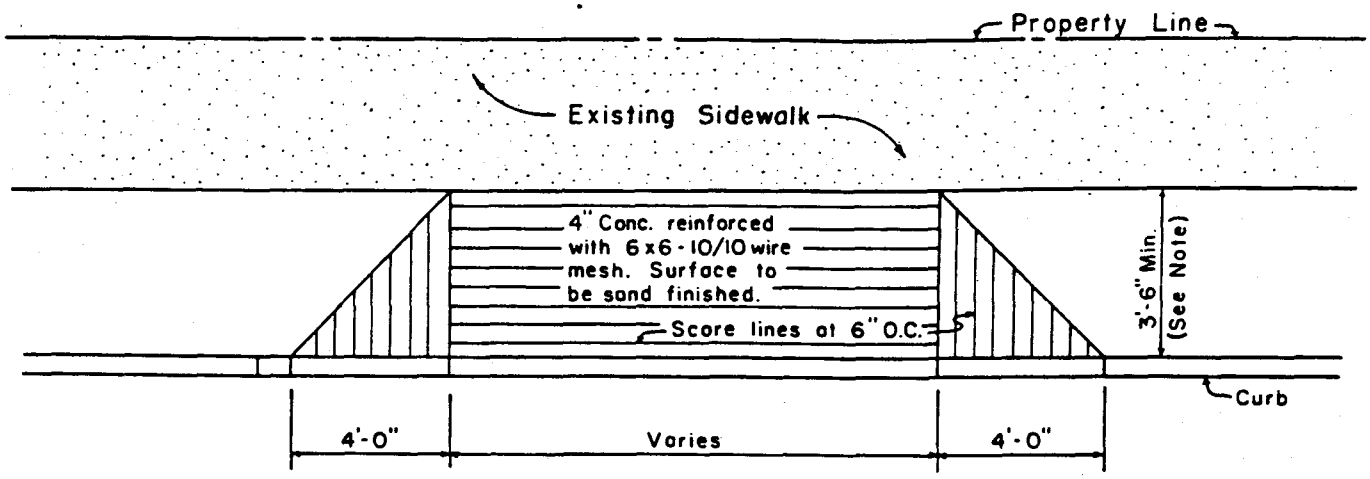

PLAN

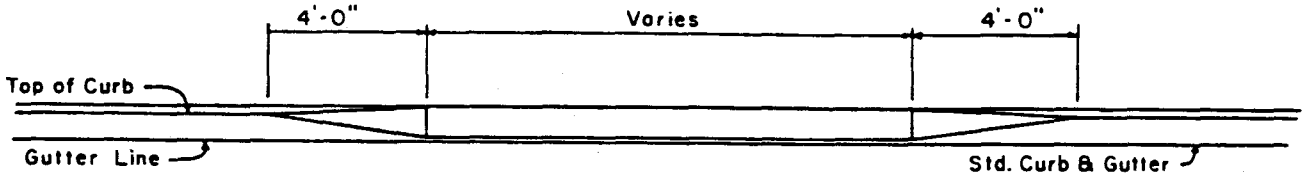

ELEVATION

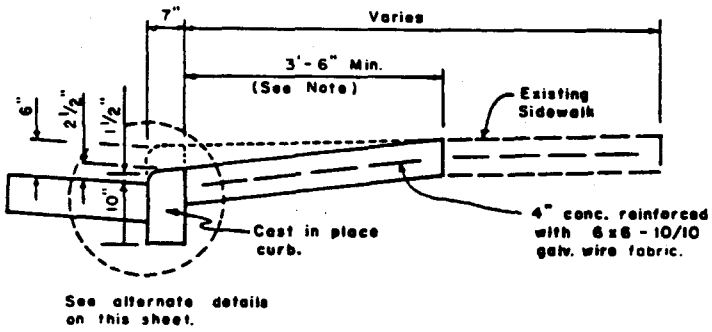

SECTION A-A

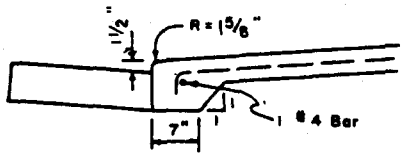

ALTERNATE DETAIL

NOTES:

1. For length less than 3'-6", remove existing sidewalk and construct standard concrete driveway. See sheet R-3.
2. Broom finish may be permitted.

STANDARD CONCRETE DRIVEWAY

WITH EXISTING SIDEWALK

COUNTY OF MAUI	CONCRETE DRIVEWAY WITH EXISTING SIDEWALK NOT TO SCALE SEPTEMBER 1984	STANDARD DETAILS	R-51

R-52

STANDARD DETAILS

ROADWAY TYPICAL SECTIONS

SEPTEMBER 1984

NOT TO SCALE

COUNTY OF MAUI

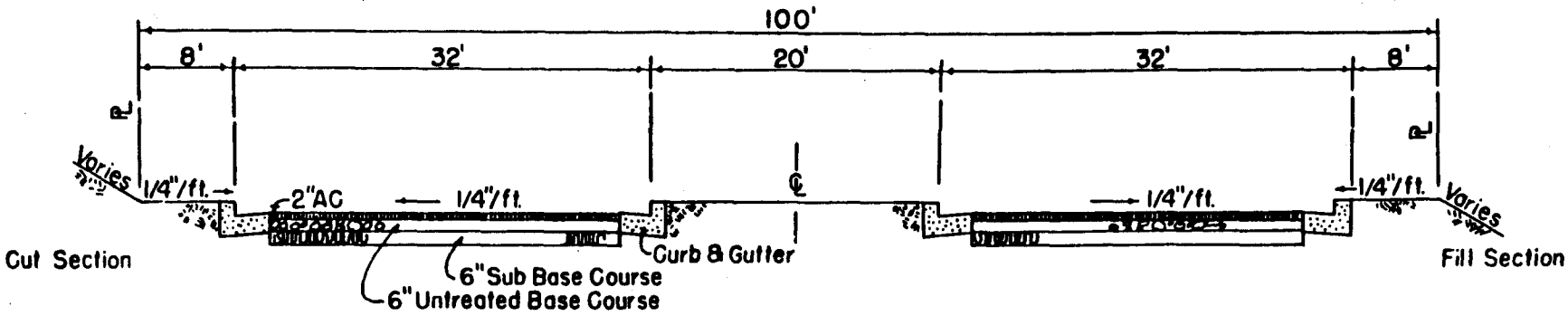

PARKWAY

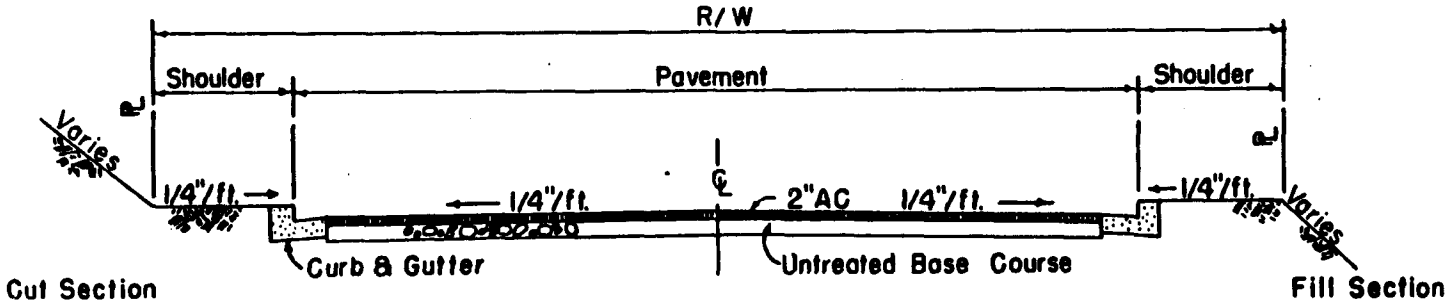

STREETS W/ CURBS

ROADWAY TYPICAL SECTIONS

Scale None

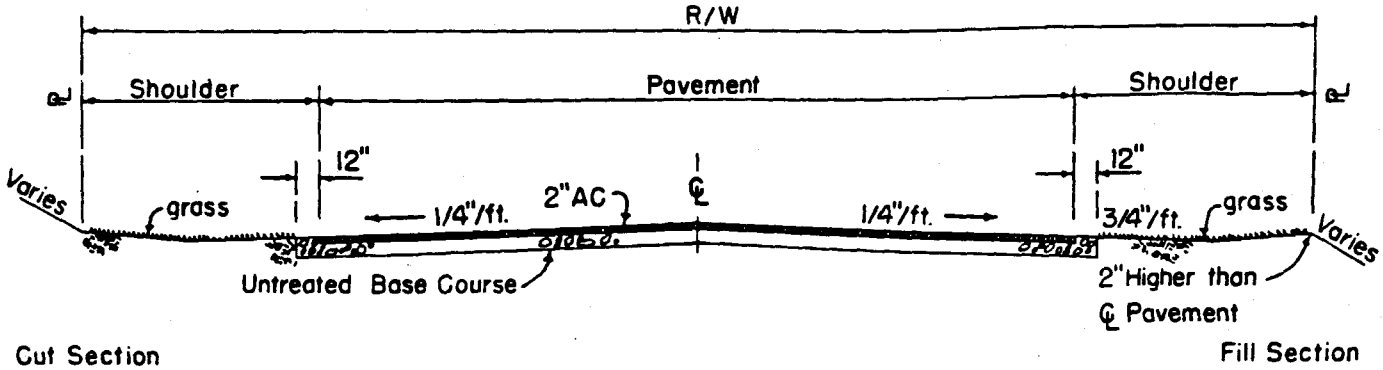

TYPICAL SECTION
ROADWAY W/o CURBS

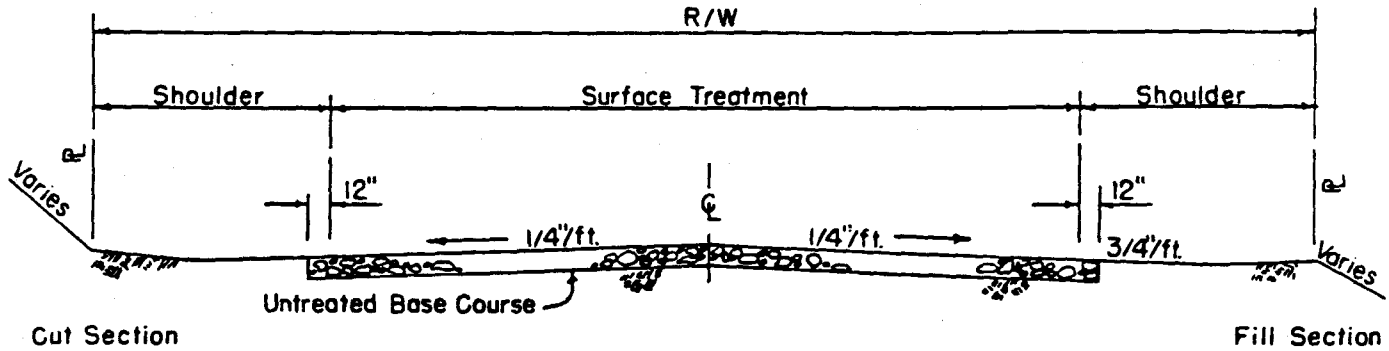

TYPICAL SECTION
GRAVEL ROAD - PRIVATE

ROADWAY
TYPICAL SECTIONS

COUNTY OF MAUI	ROADWAY TYPICAL SECTIONS NOT TO SCALE SEPTEMBER 1984	STANDARD DETAILS	R-53

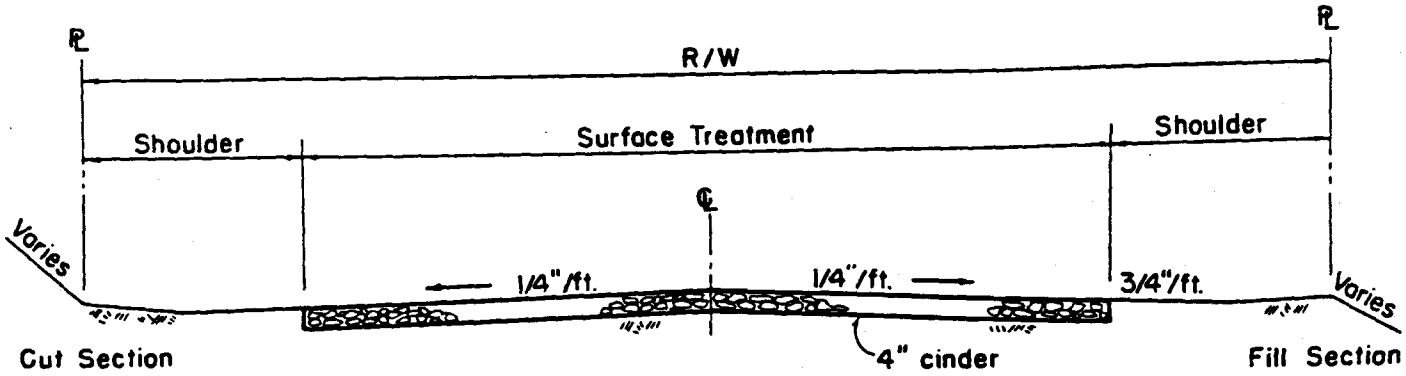

TYPICAL SECTION
GRAVEL ROAD - AGRICULTURAL

NOTES:

1. Prime coat (SS-1) shall be applied at the rate of approximately 0.35 gal. per sq. yd. after basecourse has been compacted.
2. After the bituminous material has been absorbed, RS-1 shall be applied at the rate of 0.35 gal. per sq. yd.
3. Size 8 rocks (chips) shall then be spread in a uniform layer at the rate of approximately 20 lbs. per sq. yd. and rolled.

ROADWAY
TYPICAL SECTIONS

Not to Scale

R-54	STANDARD DETAILS	ROADWAY TYPICAL SECTIONS SEPTEMBER 1984 NOT TO SCALE	COUNTY OF MAUI

Swale - Design & Construction Standards

(Areas w/o Curb & Gutters)

Scale: 1/2"=1'-0"

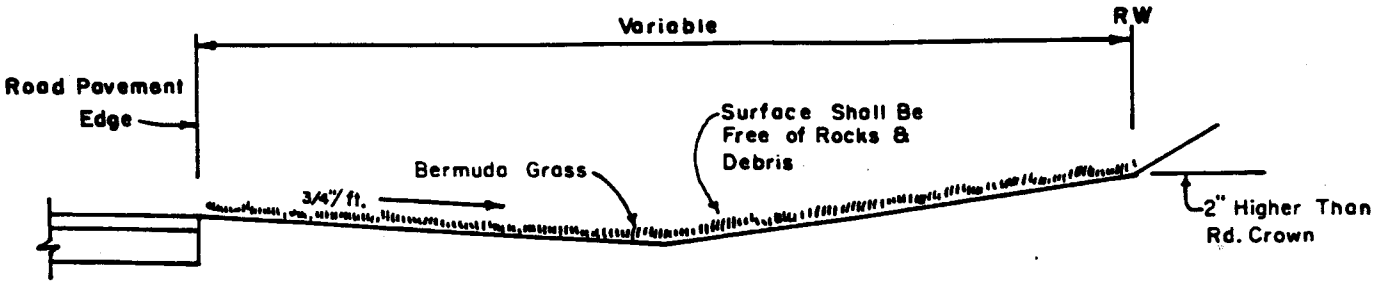

GRASSED SWALE

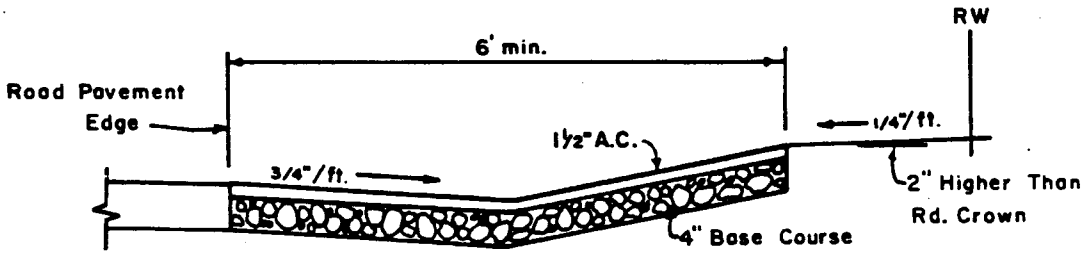

ASPHALTIC CONC. SWALE

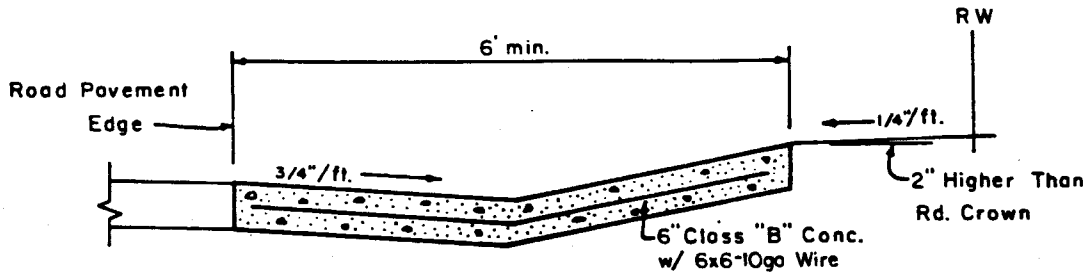

REINF. CONC. SWALE

ROADWAY SWALES

COUNTY OF MAUI	ROADWAY SWALES SCALE: 1/4" = 1'-0" SEPTEMBER 1984	STANDARD DETAILS	R-55

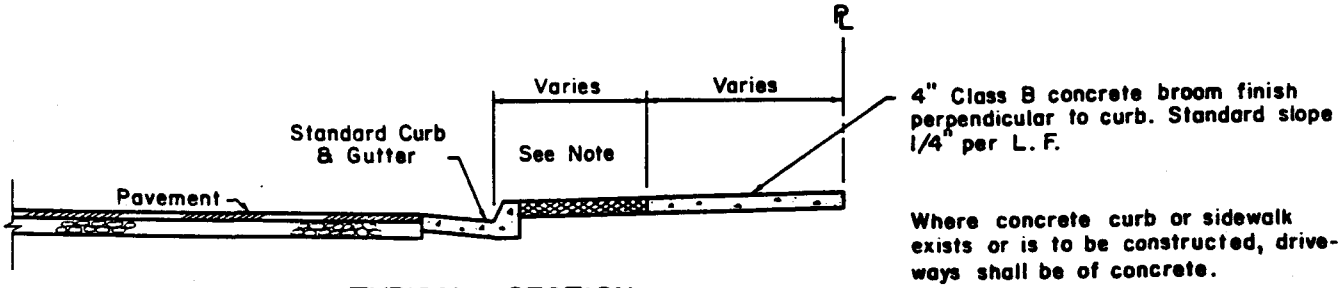

TYPICAL SECTION

NOTE:

1. Lawn grass or vegetative ground cover of a type with a maximun growth height of 4" or of a type that will grow at a trim height of 4" except vines or other planting which may be a tripping hazard. 4" topsoil required.
2. In lieu of lawn grass, Director of Public Works may authorize:
   (a) Acceptable artificial turf, with proper bases.
   (b) Precast masonry units laid closely in a uniform pattern (bricks, tile caps, etc.) with proper base.
   (c) Asphalt concrete on proper base.
   (d) Concrete poured separately from the concrete sidewalk, and of similar thickness.
   (e) Loose aggregates, such as basaltic, coral or limestone chips.
3. Street tree including existing trees may be permitted in sidewalk areas subject to the approval of the Department of Public Works.
4. Sprinklers, set flush with the surface, may be permitted by the Director of Public Works.

SIDEWALK WITH STANDARD CURB & GUTTER

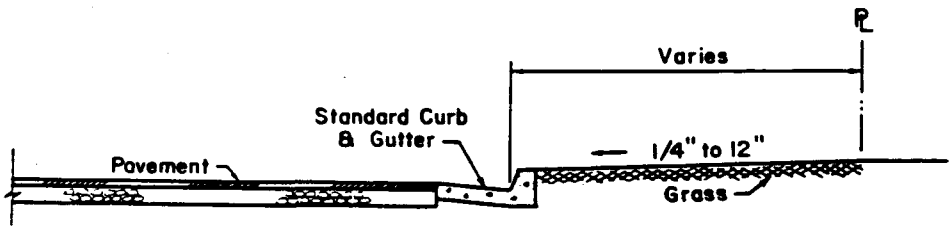

TYPICAL SECTION

SIDEWALK WITH CURBS ONLY

R-56	STANDARD DETAILS	SIDEWALK DETAILS SEPTEMBER 1984	COUNTY OF MAUI

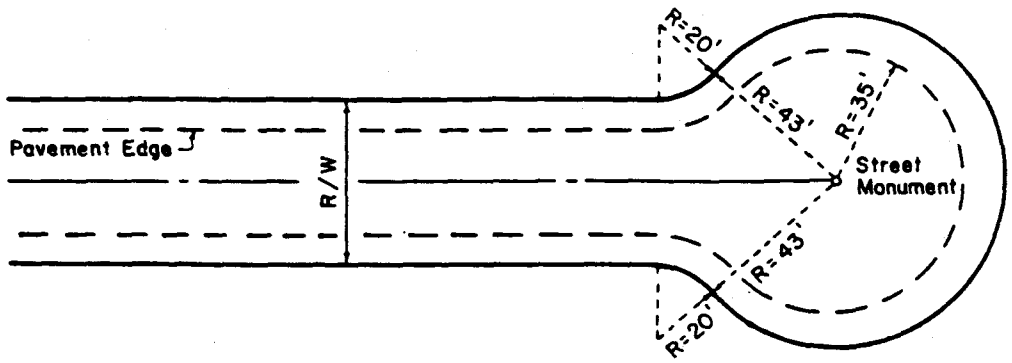

TYPICAL

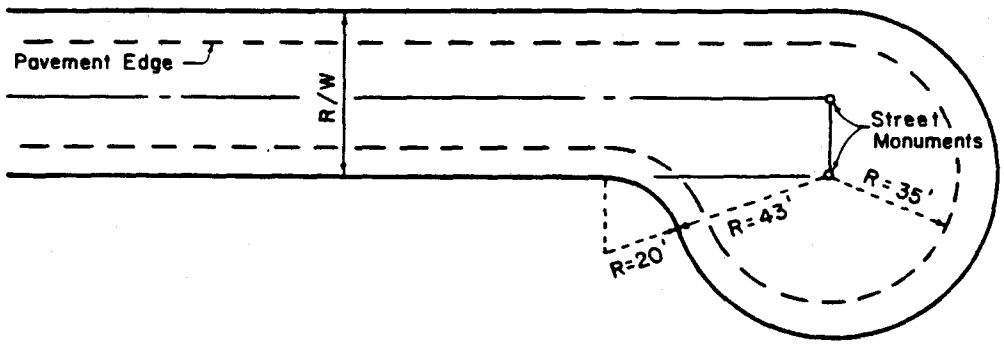

OFFSET

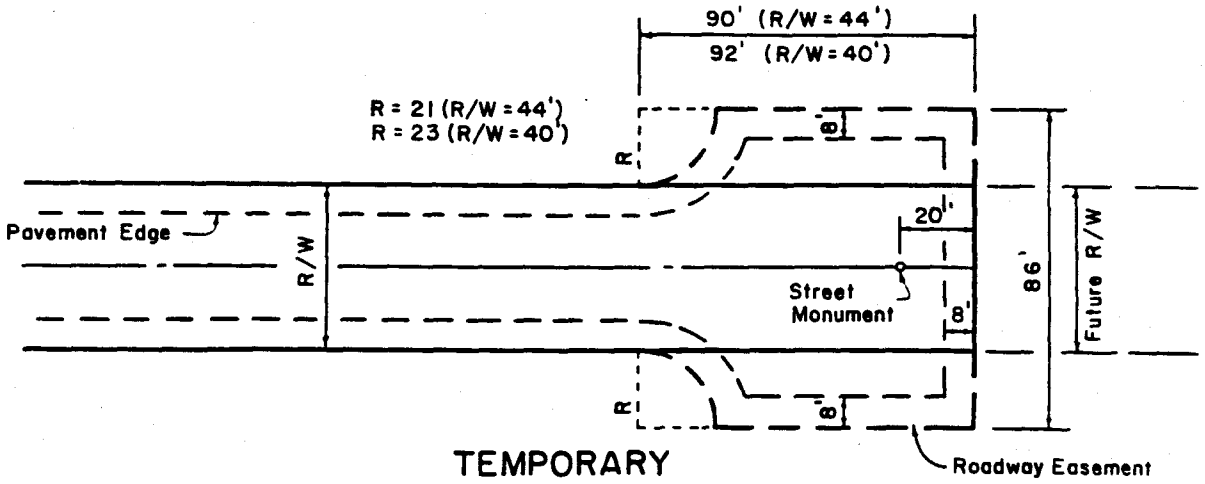

TEMPORARY

CUL-DE-SAC

SCALE: 1 INCH = 50 FEET

COUNTY OF MAUI	CUL-DE-SAC SCALE: 1" = 50' SEPTEMBER 1984	STANDARD DETAILS	R-57

R-58

STANDARD DETAILS

SPACE ALLOCATION FOR UNDERGROUND UTILITIES

SEPTEMBER 1984

COUNTY OF MAUI

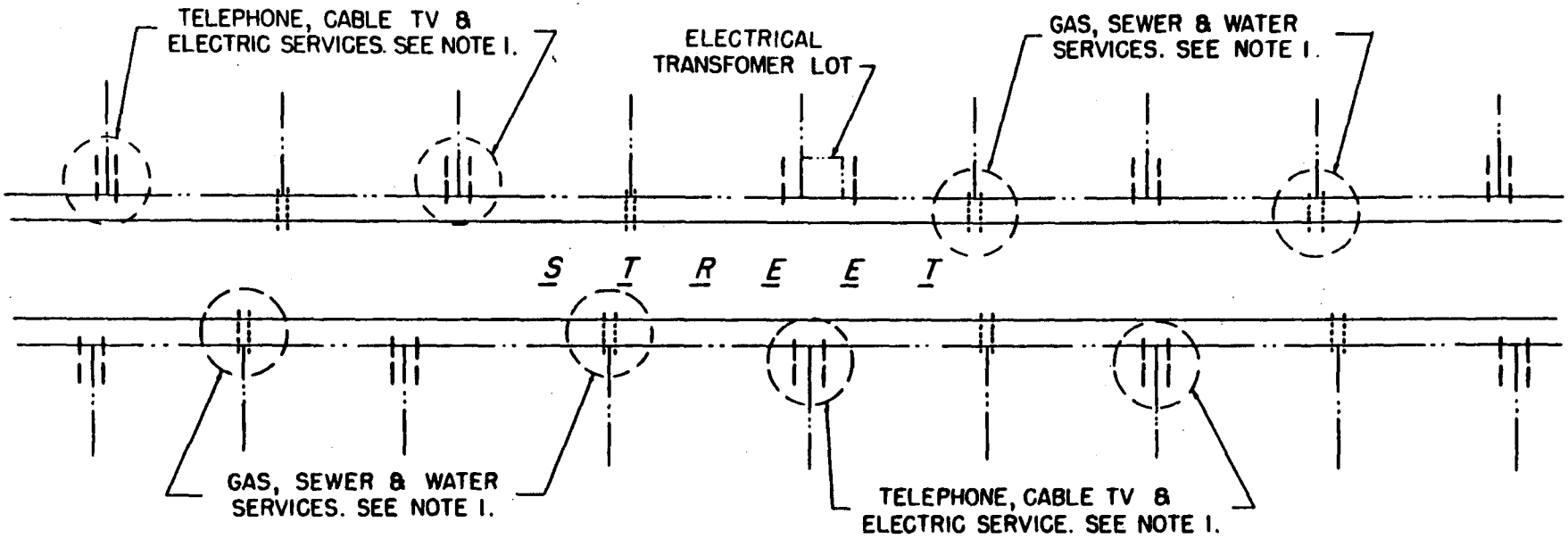

TYPICAL LOCATION PLAN

NOTES:

1. THE TELEPHONE, CABLE TV AND ELECTRIC SERVICES ARE TO BE LOCATED AT ONE PROPERTY LINE WITH THE GAS, SEWER AND WATER OCCUPYING AN ALTERNATE PROPERTY LINE AS INDICATED ON THE "TYPICAL LOCATION PLAN" WHENEVER POSSIBLE. THE RELATIVE LOCATIONS OF THE SERVICES WITH RESPECT TO THE PROPERTY LINES SHALL CONFORM TO THE DIMENSIONS INDICATED ON THE "PLAN VIEW"

2. FOR CASES WHERE ALL THE UTILITIES ARE TO BE LOCATED AT THE COMMON PROPERTY LINES, THE RELATIVE LOCATIONS OF THE SERVICES TO THE PROPERTY LINES SHALL ALSO CONFORM TO THE DIMENSIONS INDICATED ON THE "PLAN VIEW"

SPACE ALLOCATION FOR UNDERGROUND SERVICES AT PROPERTY LINES IN NEW SUBDIVISION AREAS

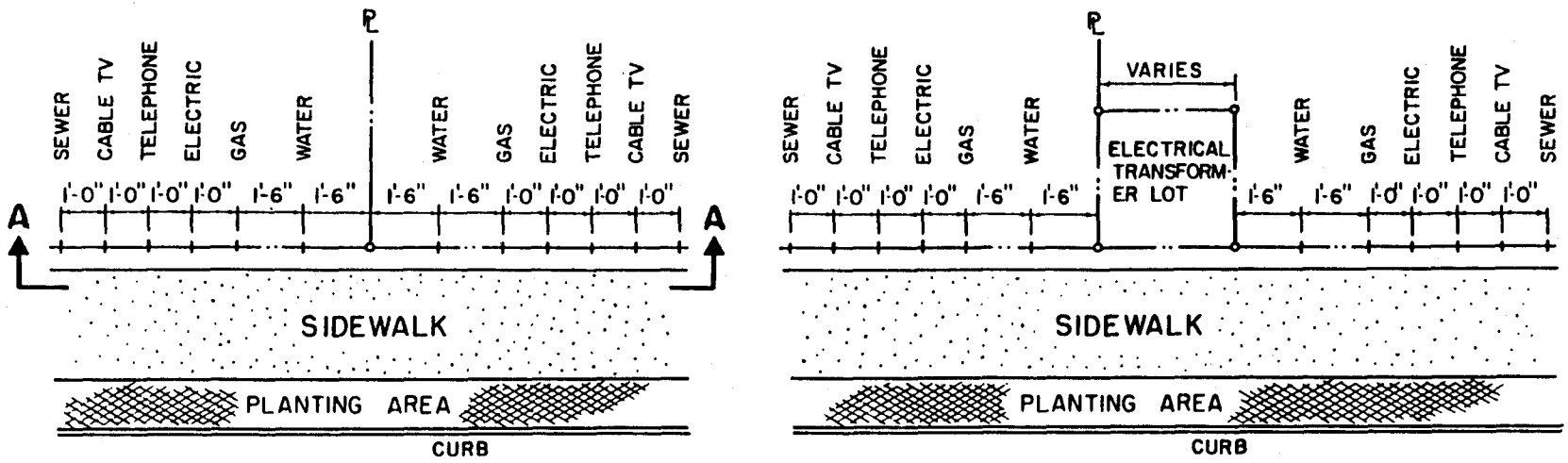

S T R E E T

PLAN VIEW

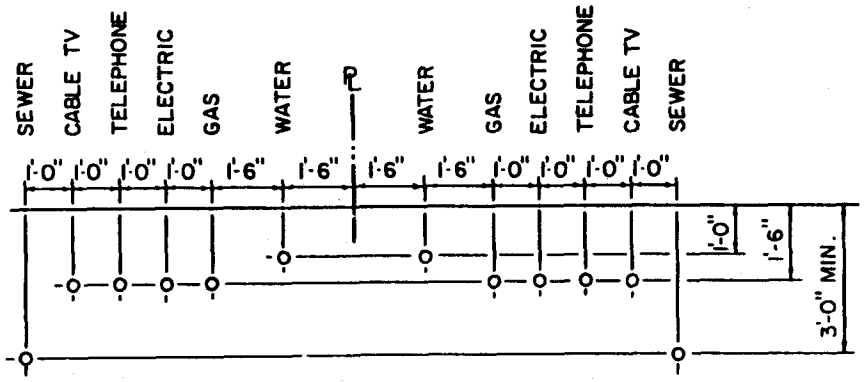

SECTION A-A

ELEVATION OF SERVICES AT PROPERTY LINE

NOTE: FOR RURAL AREAS, DEPTH OF WATER, ELECTRIC & TELEPHONE SHALL BE INCREASED 6".

SPACE ALLOCATION FOR UNDERGROUND SERVICES AT PROPERTY LINES IN NEW SUBDIVISION AREAS

COUNTY OF MAUI

SPACE ALLOCATION FOR UNDERGROUND UTILITIES

SEPTEMBER 1984

STANDARD DETAILS

R-59

STANDARD DETAILS for Public Works Construction

September 1984

Storm Drains

PART

2

COUNTY OF KAUAI
CITY & COUNTY OF HONOLULU
COUNTY OF MAUI
COUNTY OF HAWAII

TYPE "A" CATCH BASIN

SCALE: 1/4" = 1'-0"

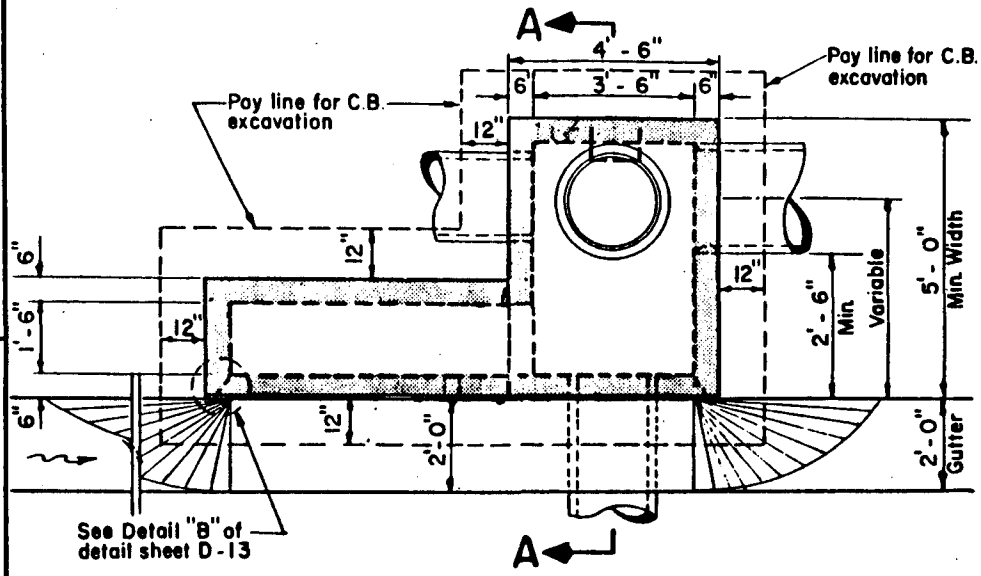

PLAN

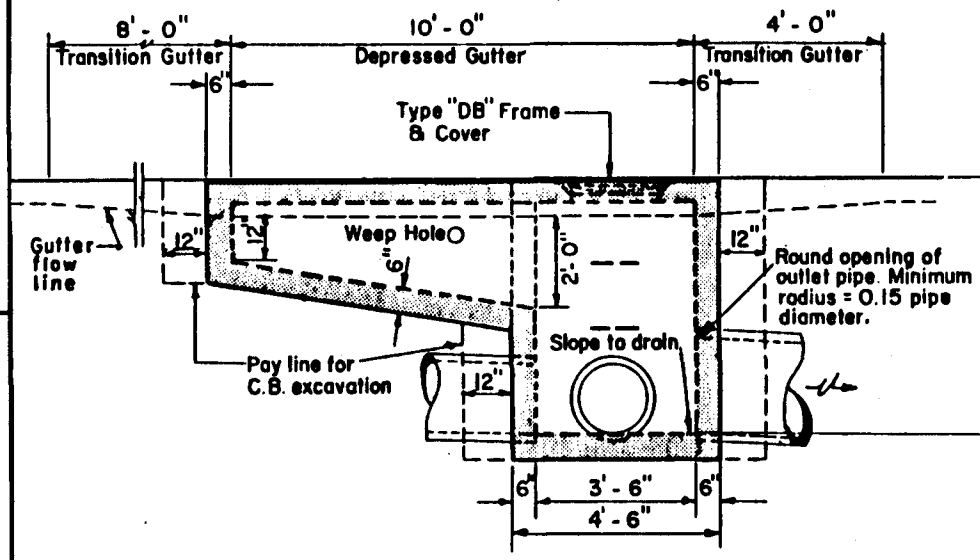

ELEVATION

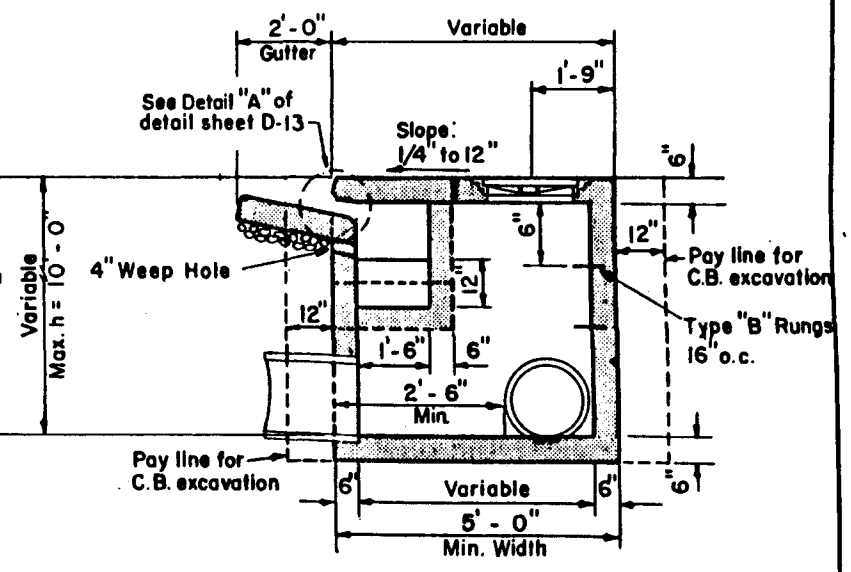

SECTION A-A

NOTES:

1. Provide 2 cu. ft. of crushed rock, ASTM size #9 Rock Sand, at weep hole.
2. C.B. wing shall be installed to favor upstream of gutter flow.
3. See sheet D-2 for reinforcement details.
4. Rungs shall not be installed over a pipe connection and the lowest rung shall be not more than 2'-0" above the invert.

TYPE "A" CATCH BASIN

SCALE: 1/4" = 1'-0"

SEPTEMBER 1984

STANDARD DETAILS

D-1

TYPE "A" CATCH BASIN REINFORCEMENT DETAILS

SCALE: 1/4" = 1'- 0"

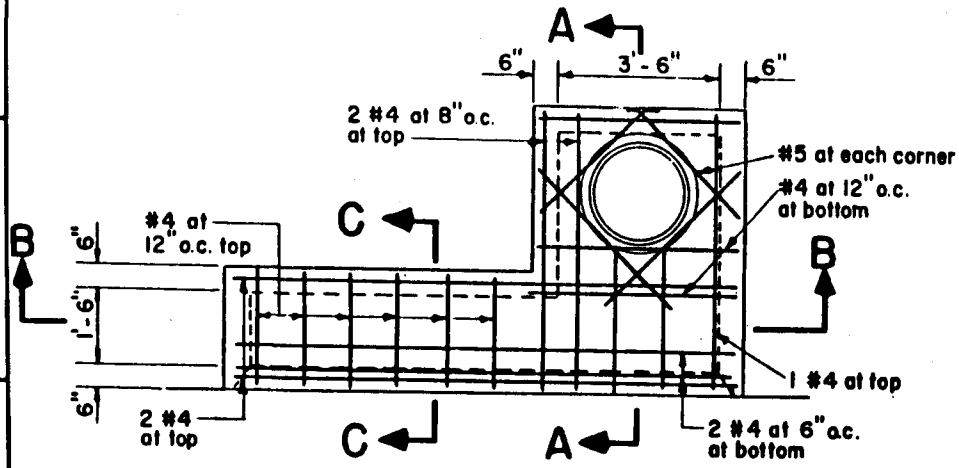

PLAN

NOTES:

1. See sheet D-13 for reinforcement at pipes and corners.
2. Spliced reinforcing bars shall be lapped at least 30 diameters.

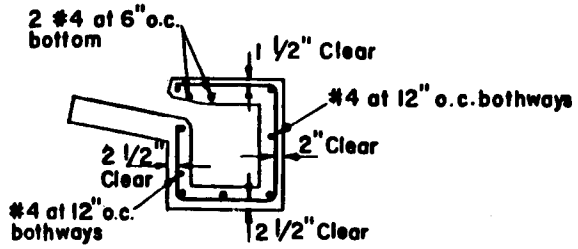

SECTION C-C

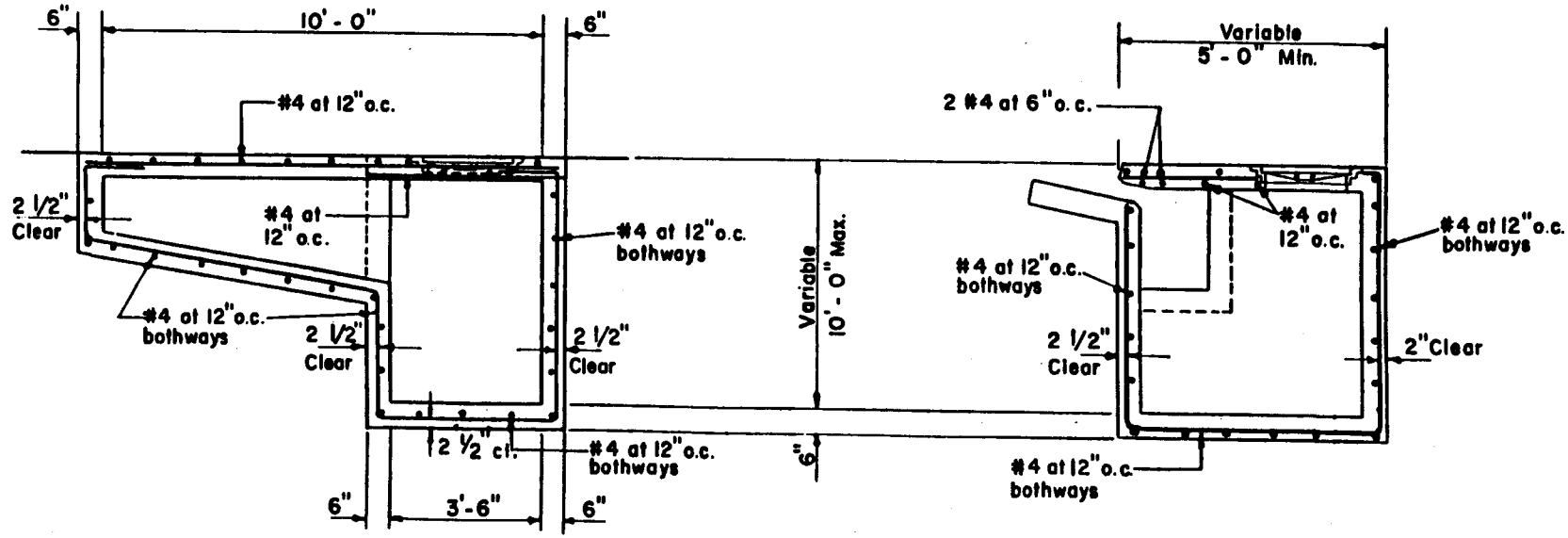

SECTION B-B

SECTION A-A

D-2

STANDARD DETAILS

TYPE "A" CATCH BASIN REINFORCEMENT DETAILS

SEPTEMBER 1984

SCALE: 1/4" = 1'-0"

COUNTY OF KAUAI
CITY & COUNTY OF HONOLULU
COUNTY OF MAUI
COUNTY OF HAWAII

COUNTY OF KAUAI
CITY & COUNTY OF HONOLULU
COUNTY OF MAUI
COUNTY OF HAWAII

TYPE "E" CATCH BASIN

SCALE: 1/4" = 1'-0"

SEPTEMBER 1984

STANDARD DETAILS

D-3

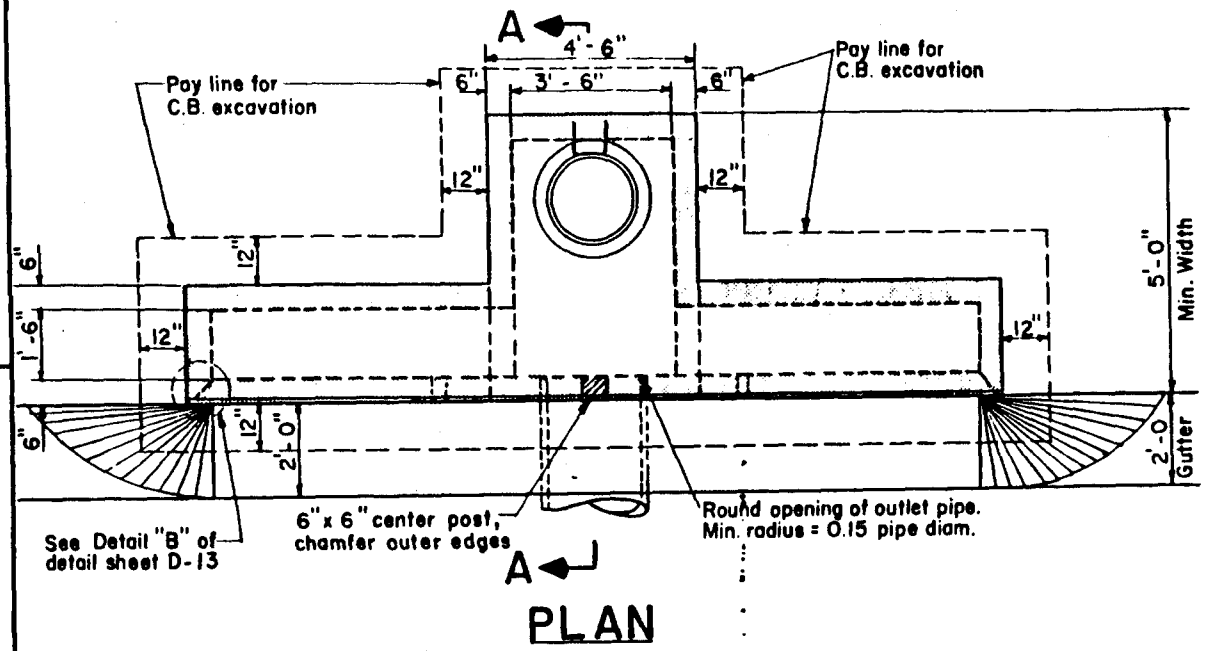

PLAN

NOTES:

1. Provide 2 cu. ft. of crushed rock (Rock Sand), ASTM size #9, at weep holes.
2. See sheet D-4 for reinforcement details.
3. Rungs shall not be installed over a pipe connection and the lowest rung shall be not more than 2'-0" above the invert.
4. This catch basin shall be used with drain pipes 60 inches or less in diameter.

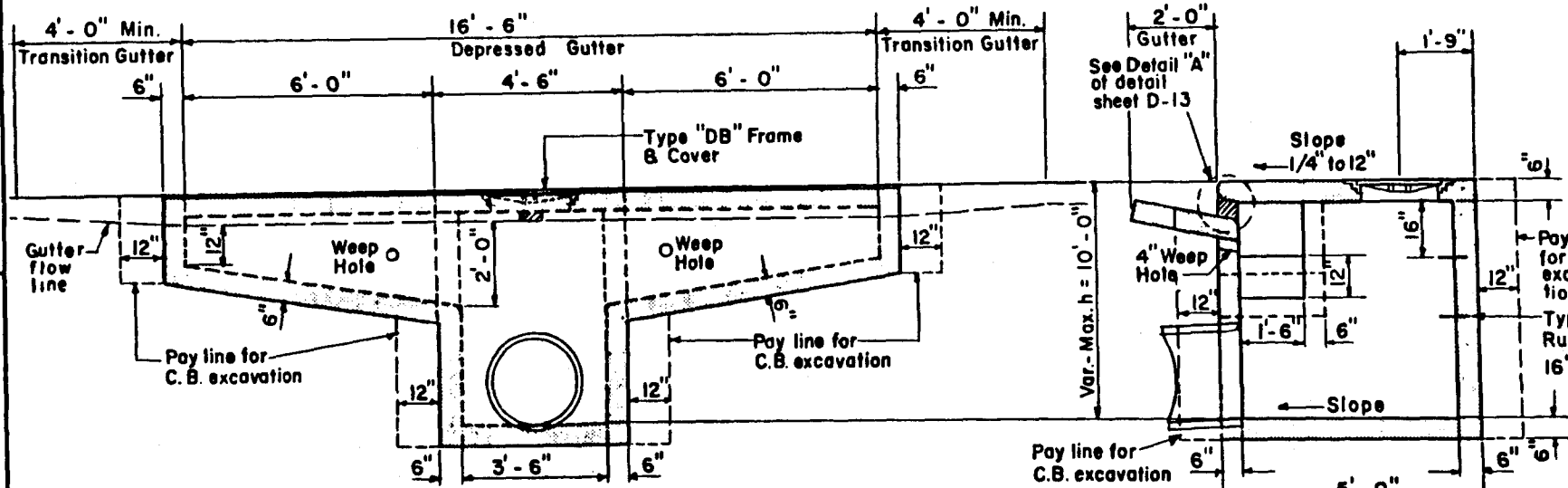

ELEVATION

SECTION A-A

D-4

STANDARD DETAILS

TYPE "E" CATCH BASIN REINFORCEMENT DETAILS

SEPTEMBER 1984

SCALE: 1/4" = 1'-0"

COUNTY OF KAUAI
CITY & COUNTY OF HONOLULU
COUNTY OF MAUI
COUNTY OF HAWAII

TYPE "E" CATCH BASIN REINFORCEMENT DETAILS

SCALE: 1/4" = 1'-0"

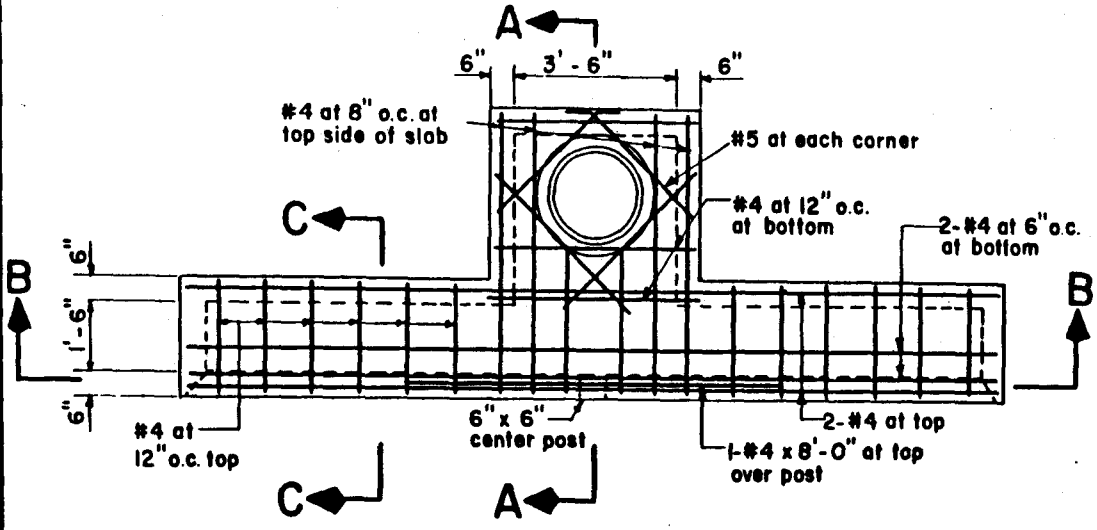

PLAN

NOTES:

1. See sheet D-13 for reinforcement at pipes and corners.
2. Spliced reinforcing bars shall be lapped at least 30 diameters.

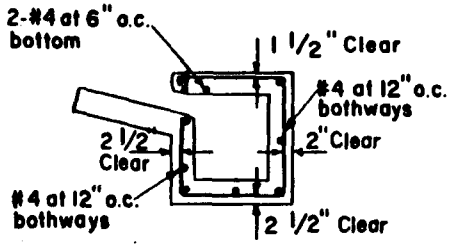

SECTION C-C

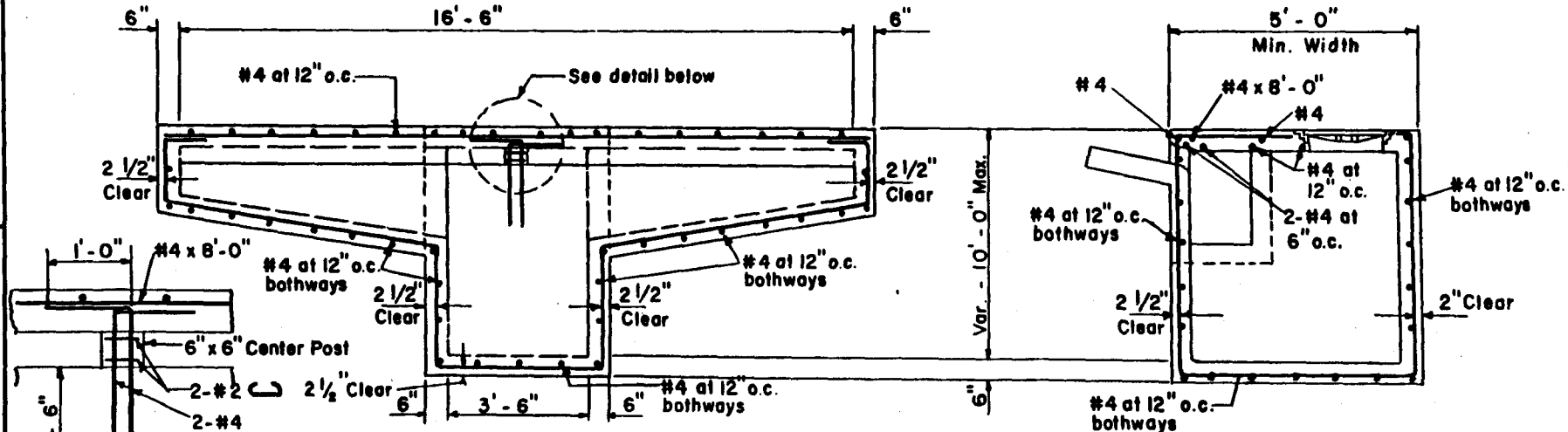

DETAIL

SECTION B-B

SECTION A-A

COUNTY OF KAUAI
CITY & COUNTY OF HONOLULU
COUNTY OF MAUI
COUNTY OF HAWAII

TYPE "B" CATCH BASIN

SCALE: 1/4" = 1'-0"

SEPTEMBER 1984

STANDARD DETAILS

D-5

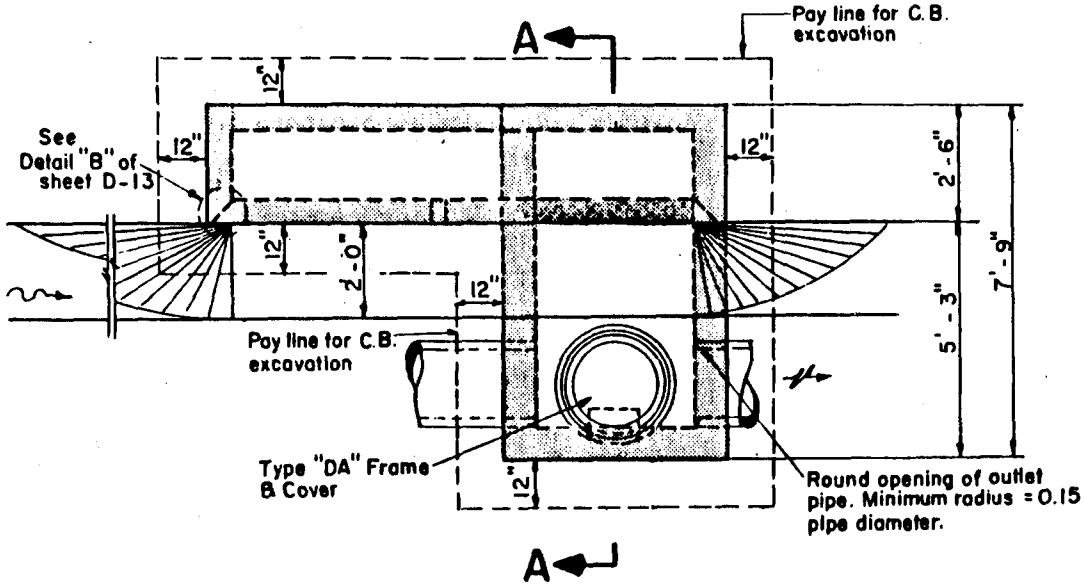

PLAN

TYPE "B" CATCH BASIN

SCALE: 1/4" = 1'-0"

NOTES:

1. Provide 2 cu. ft. of crushed rock, ASTM size #9 Rock Sand, at weep hole.
2. C.B. wing shall be installed to favor upstream of gutter flow.
3. See sheet D-6 for reinforcement details.
4. Rungs shall not be installed over a pipe connection and the lowest rung shall be not more than 2'-0" above the invert.

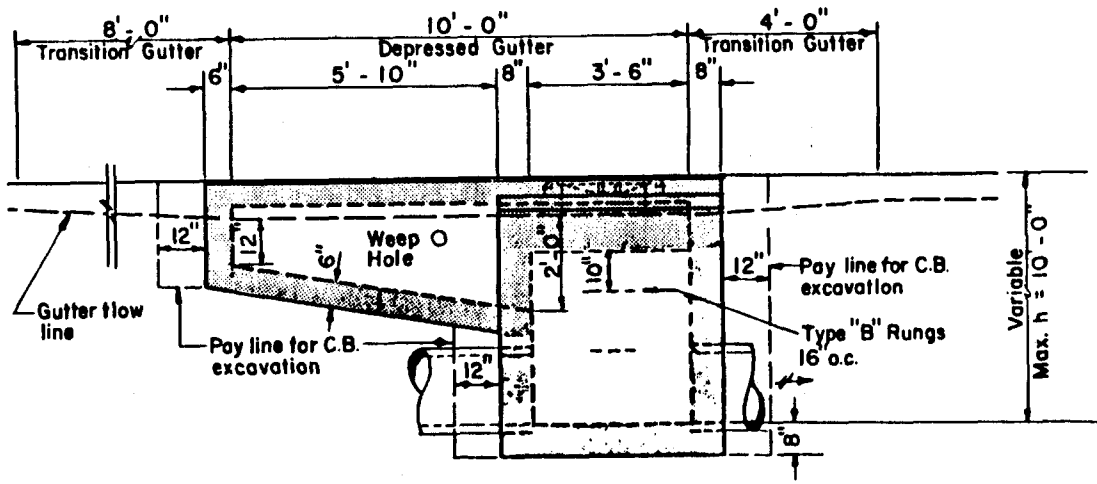

ELEVATION

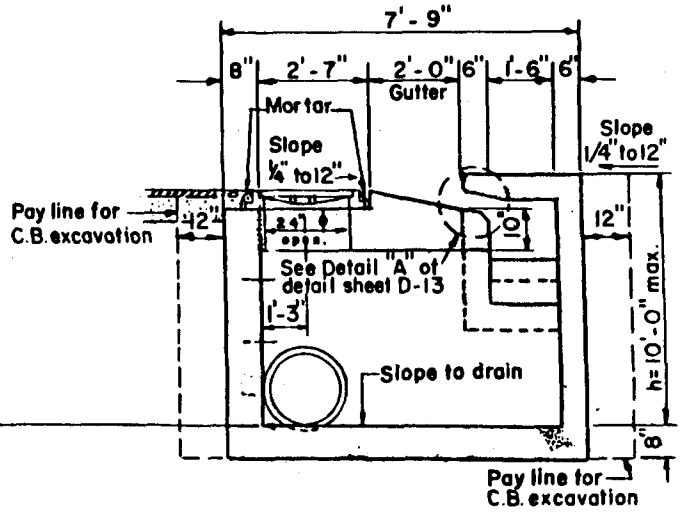

SECTION A-A

TYPE "B" CATCH BASIN REINFORCEMENT DETAILS

SCALE: 1/4" = 1'- 0"

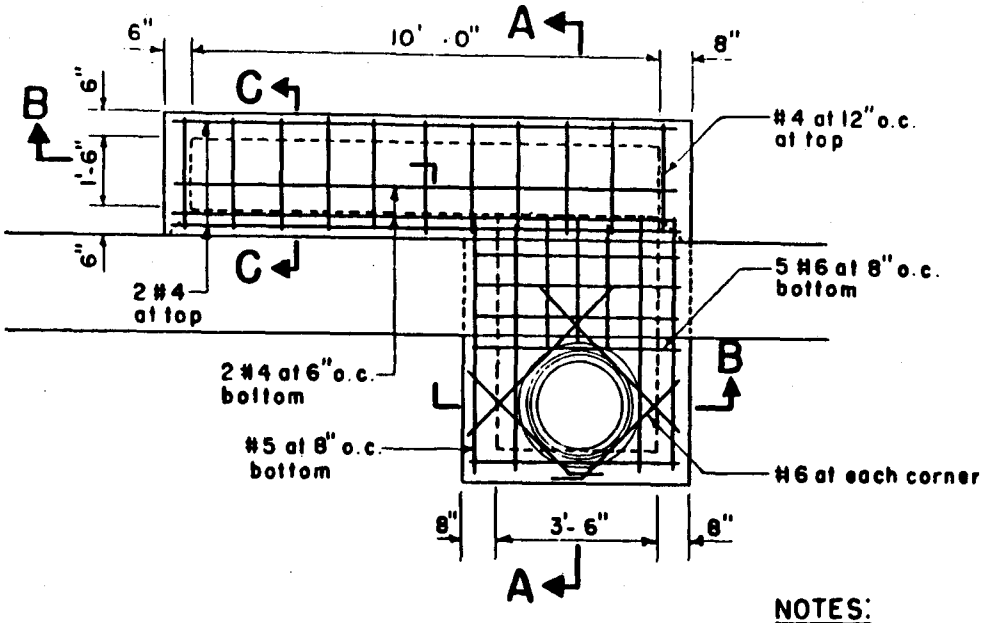

PLAN

NOTES:

1. See sheet D-13 for reinforcement at pipes and corners.
2. Spliced reinforcing bars shall be lapped at least 30 diameters.

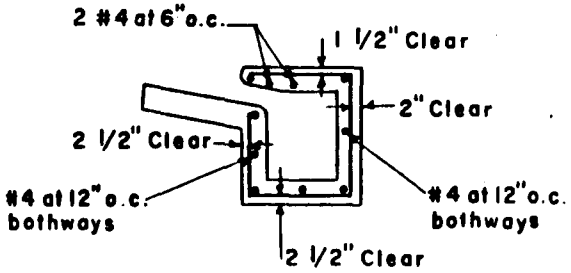

SECTION C-C

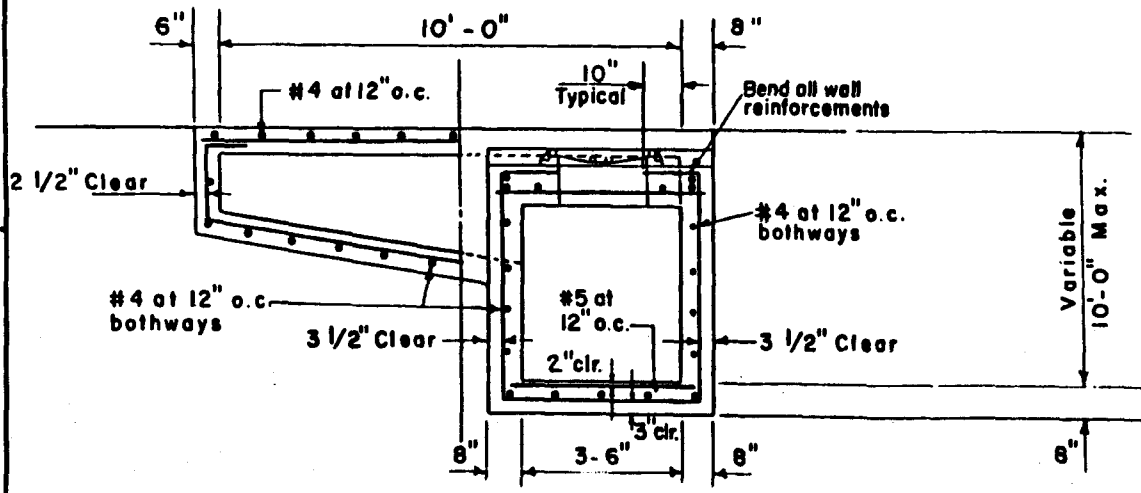

SECTION B-B

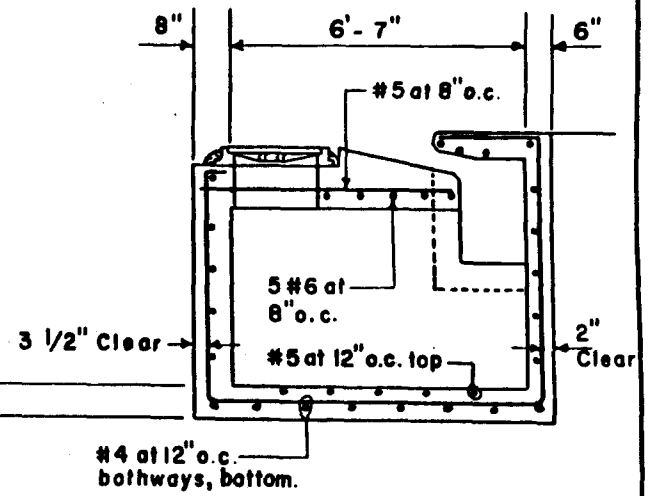

SECTION A-A

D-6

STANDARD DETAILS

TYPE "B" CATCH BASIN REINFORCEMENT DETAILS

SEPTEMBER 1984

SCALE: 1/4" = 1'-0"

COUNTY OF KAUAI
CITY & COUNTY OF HONOLULU
COUNTY OF MAUI
COUNTY OF HAWAII

COUNTY OF KAUAI
CITY & COUNTY OF HONOLULU
COUNTY OF MAUI
COUNTY OF HAWAII

TYPE "F" CATCH BASIN

SCALE: 1/4" = 1'-0"

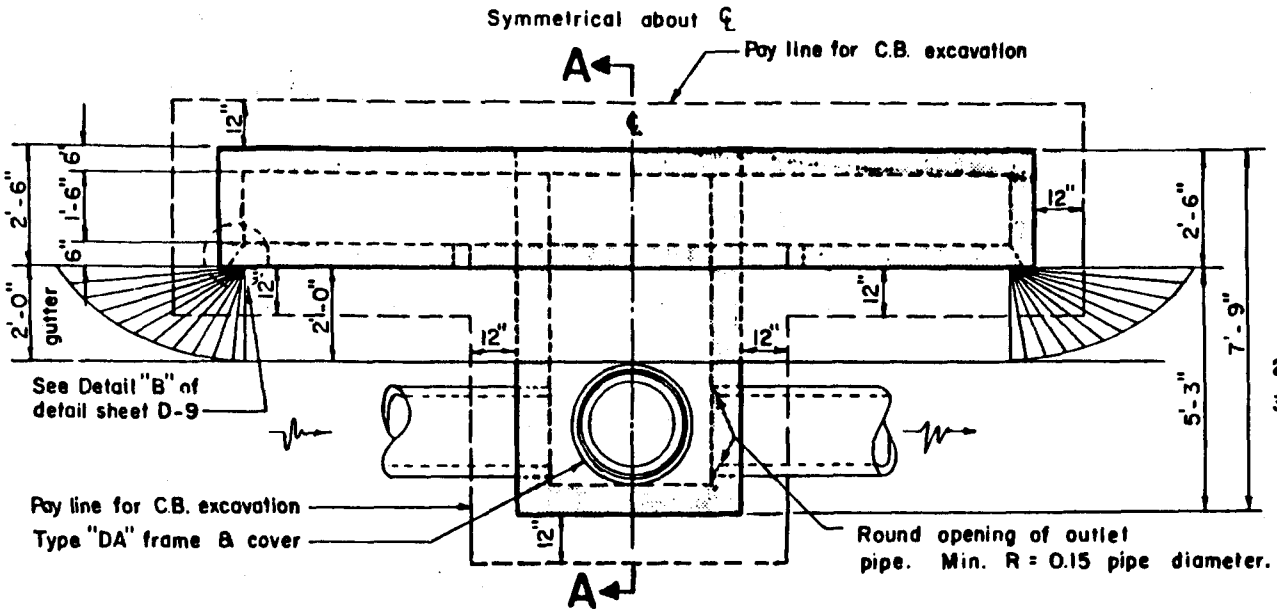

PLAN

NOTES:

1. Provide 2 cu. ft. of crushed rock (Rock Sand) ASTM size #9, at weep holes.
2. See sheet D-8 for reinforcement details.
3. Rungs shall not be installed over a pipe connection and the lowest rung shall be not more than 2'-0" above the invert.

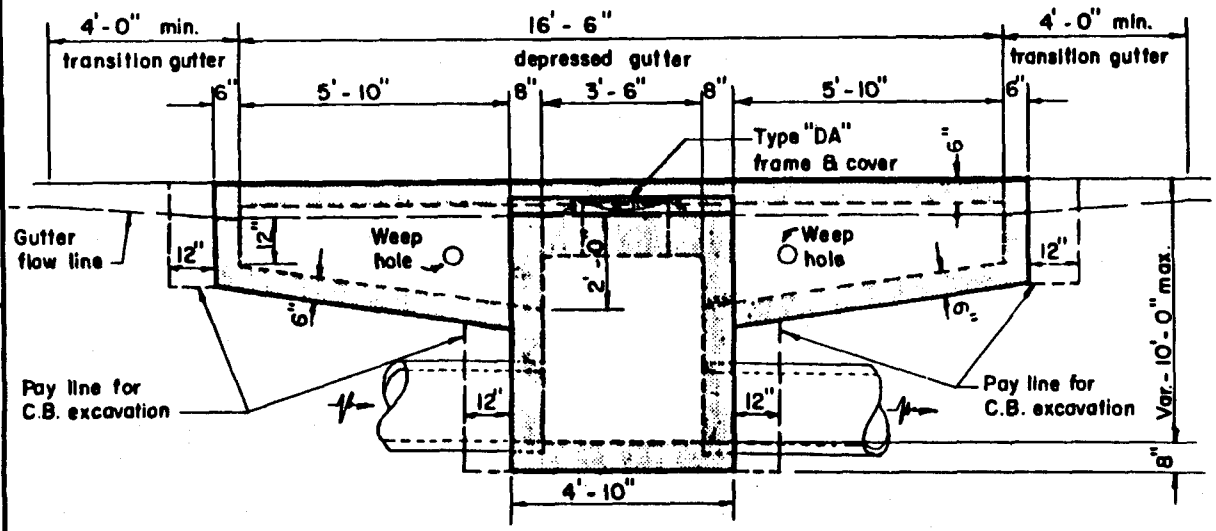

ELEVATION

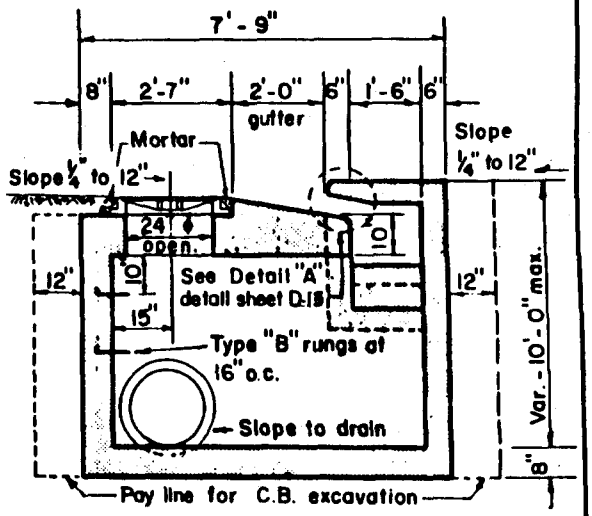

SECTION A-A

TYPE "F" CATCH BASIN

SCALE: 1/4" = 1'-0"

SEPTEMBER 1984

STANDARD DETAILS

D-7

TYPE "F" CATCH BASIN REINFORCEMENT DETAILS

SCALE: 1/4" = 1'-0"

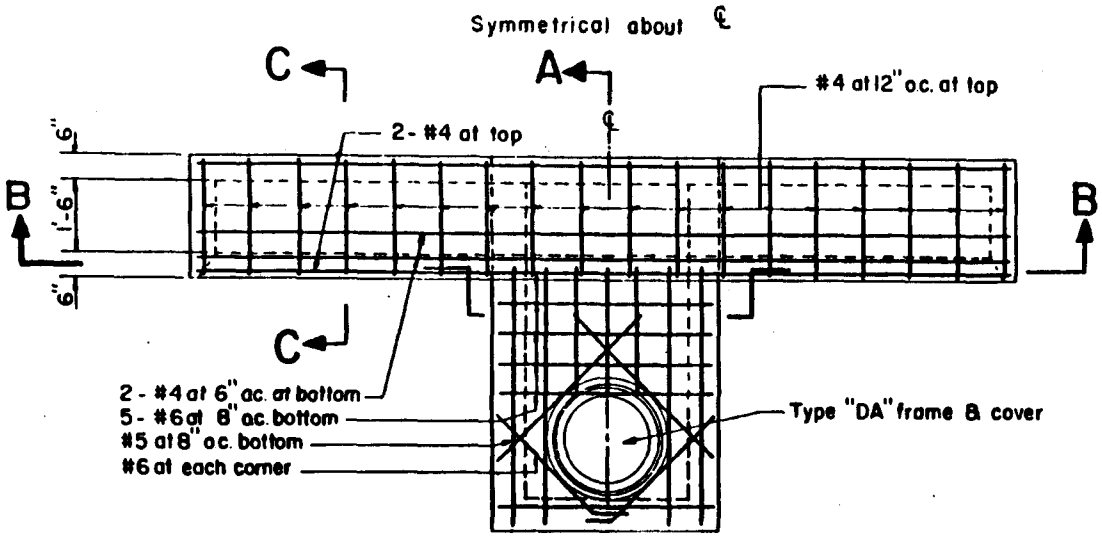

PLAN

NOTES:

1. See sheet D-13 for reinforcement at pipes and corners.
2. Spliced reinforcing bars shall be lapped at least 30 diameters.

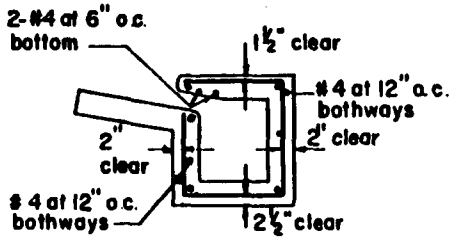

SECTION C-C

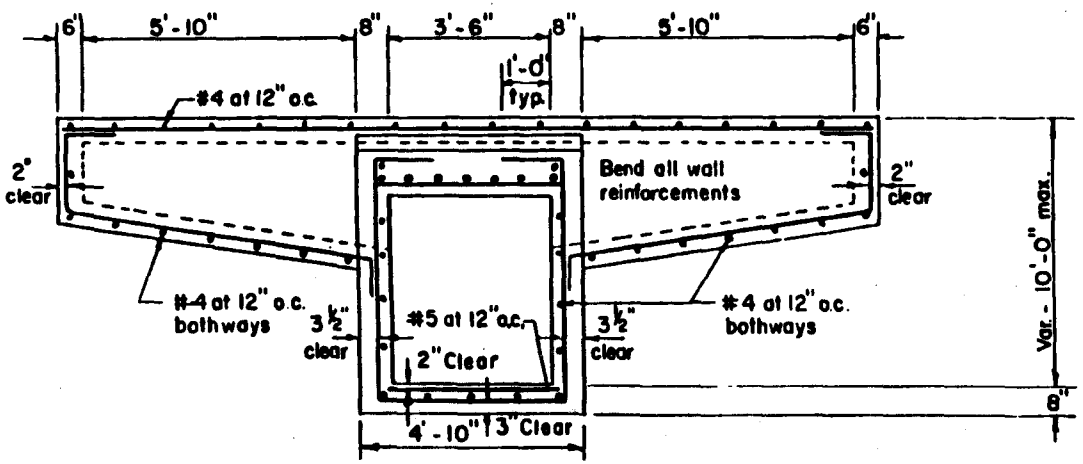

SECTION B-B

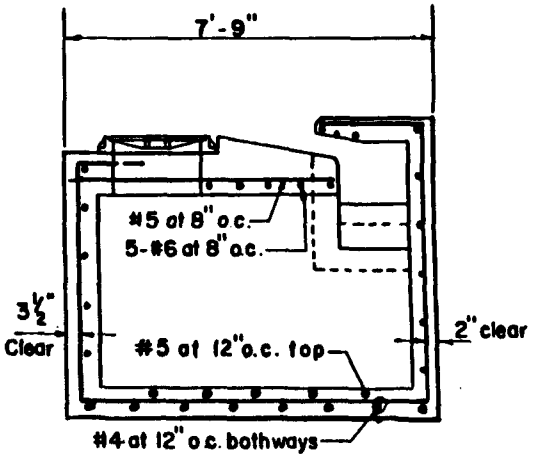

SECTION A-A

D-8

STANDARD DETAILS

TYPE "F" CATCH BASIN REINFORCEMENT DETAILS

SEPTEMBER 1984

SCALE: 1/4" = 1'-0"

COUNTY OF KAUAI
CITY & COUNTY OF HONOLULU
COUNTY OF MAUI
COUNTY OF HAWAII

TYPE "C" CATCH BASIN

SCALE: 3/8" = 1'-0"

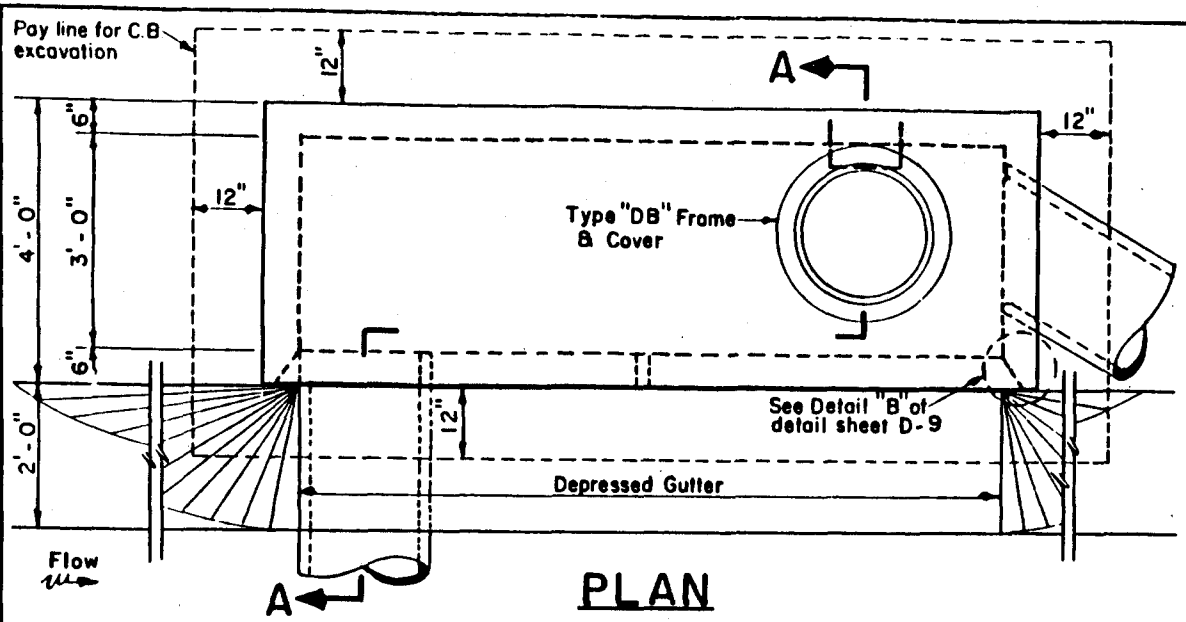

PLAN

NOTES:

1. Provide 2 cu. ft. of crushed rock, ASTM size #9 Rock Sand, at weep hole.
2. See sheet D-10 for reinforcement details.
3. Rungs shall not be installed over a pipe connection and the lowest rung shall be not more than 2'-0" above the invert.

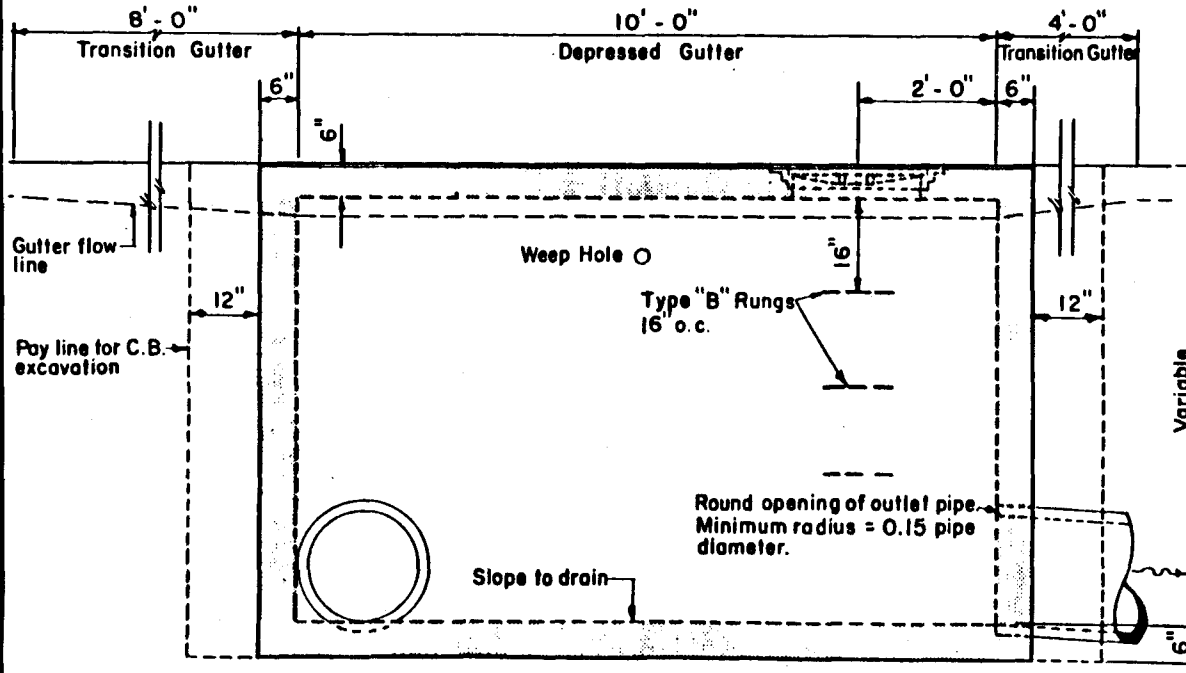

ELEVATION

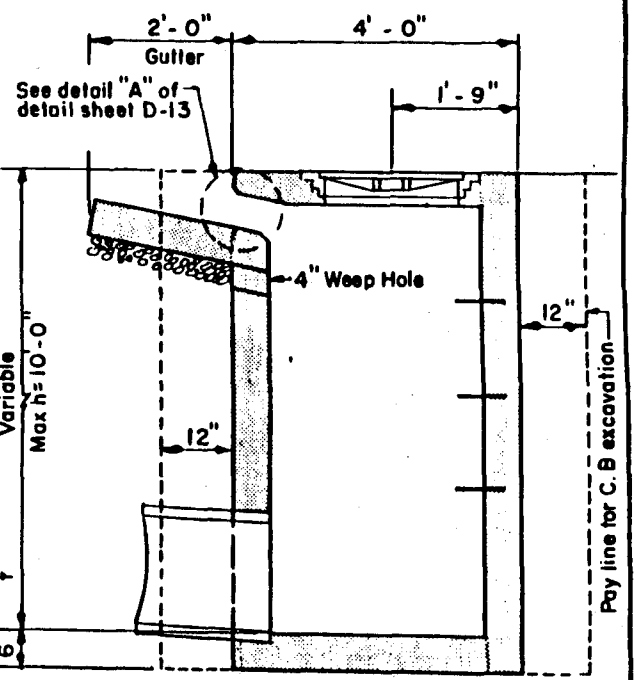

SECTION A-A

COUNTY OF KAUAI
CITY & COUNTY OF HONOLULU
COUNTY OF MAUI
COUNTY OF HAWAII

TYPE "C" CATCH BASIN

SCALE: 3/8" = 1'-0"

SEPTEMBER 1984

STANDARD DETAILS

D-9

TYPE "C" CATCH BASIN REINFORCEMENT DETAILS

SCALE: 3/8" = 1'-0"

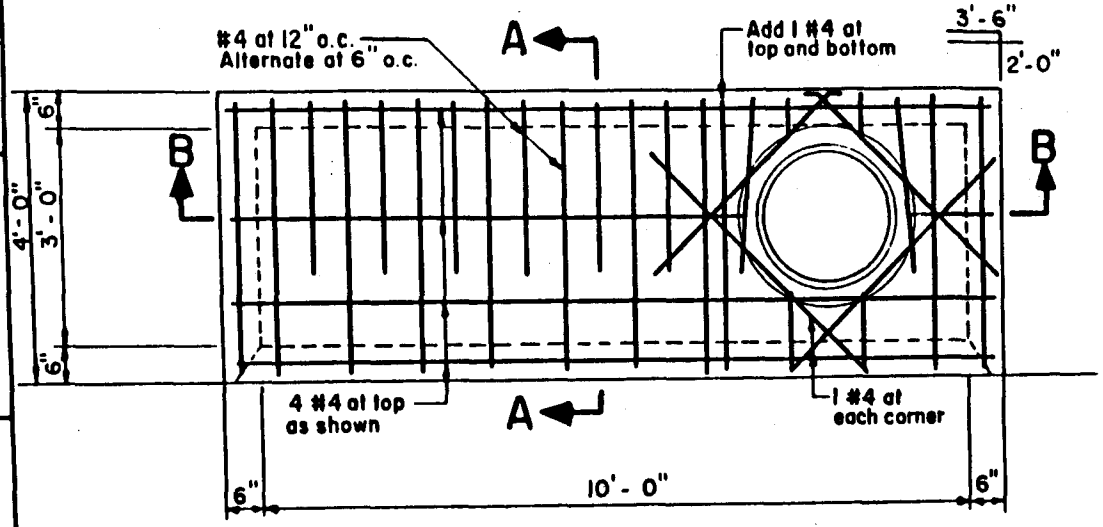

PLAN

NOTES:

1. See sheet D-13 for reinforcement at pipes and corners.
2. Spliced reinforcing bars shall be lapped at least 30 diameters.

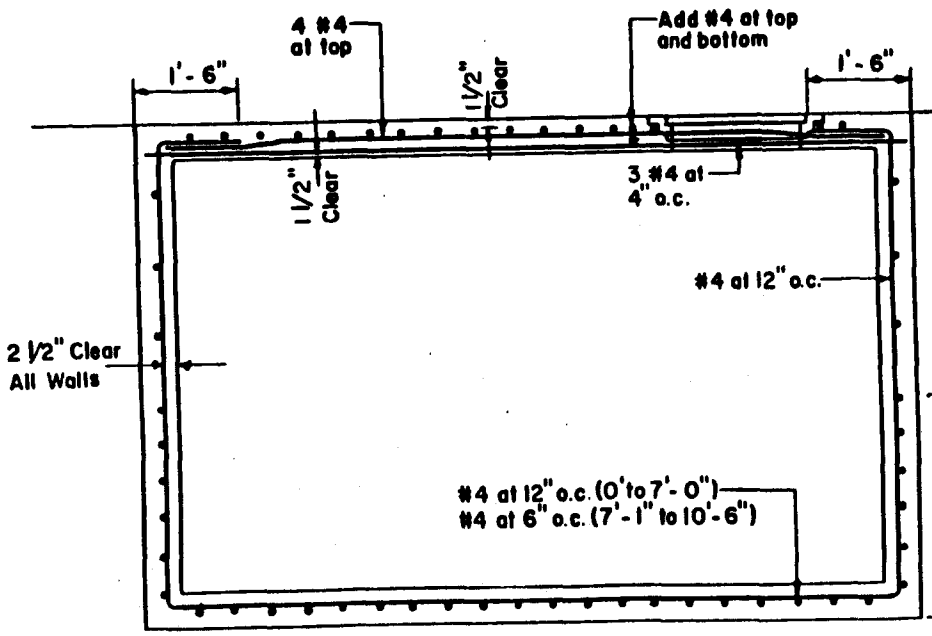

SECTION B-B

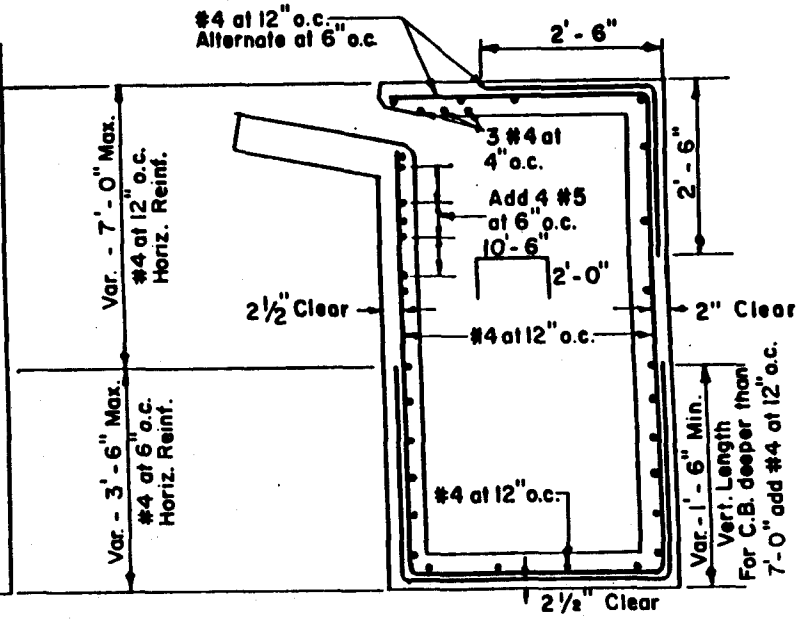

SECTION A-A

D-10

STANDARD DETAILS

TYPE "C" CATCH BASIN
REINFORCEMENT DETAILS

SCALE: 3/8" = 1'-0"

SEPTEMBER 1984

COUNTY OF KAUAI
CITY & COUNTY OF HONOLULU
COUNTY OF MAUI
COUNTY OF HAWAII

TYPE "D" CATCH BASIN

SCALE: 3/8" = 1'-0"

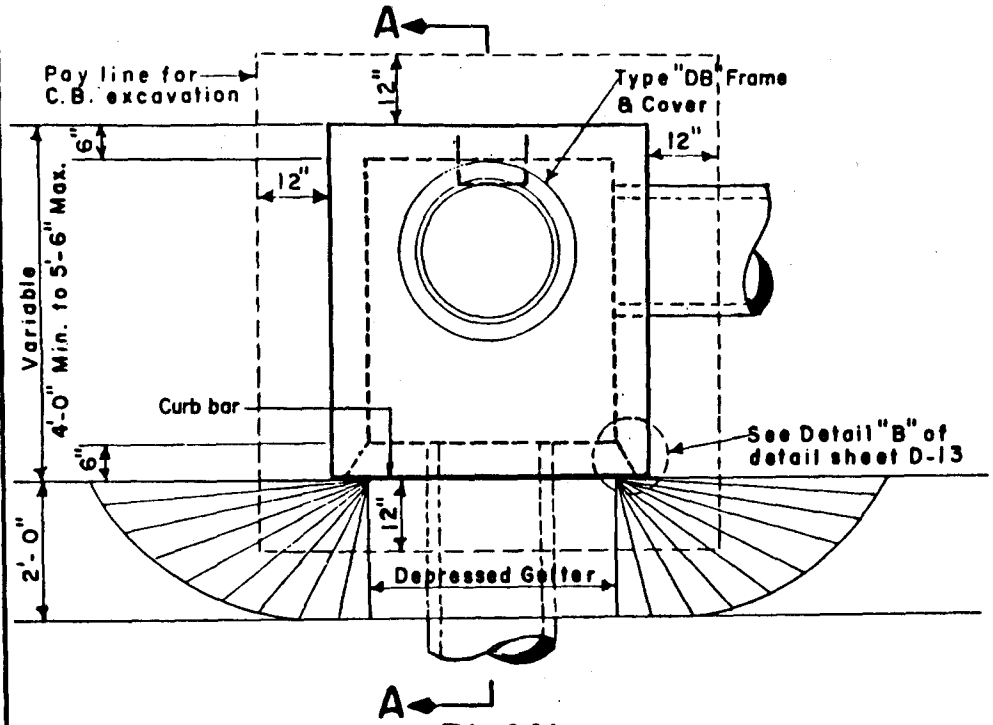

PLAN

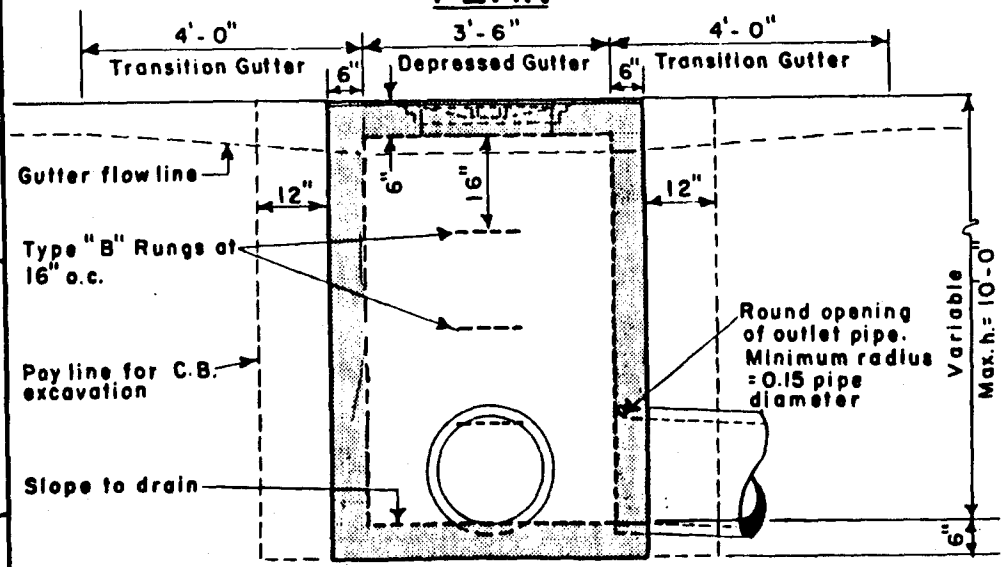

ELEVATION

NOTES:

1. Provide 2 cu. ft. of crushed rock, ASTM size #9 Rock Sand, at weep hole.
2. See sheet D-12 for reinforcement details.
3. Rungs shall not be installed over a pipe connection and the lowest rung shall be not more than 2'-0" above the invert.

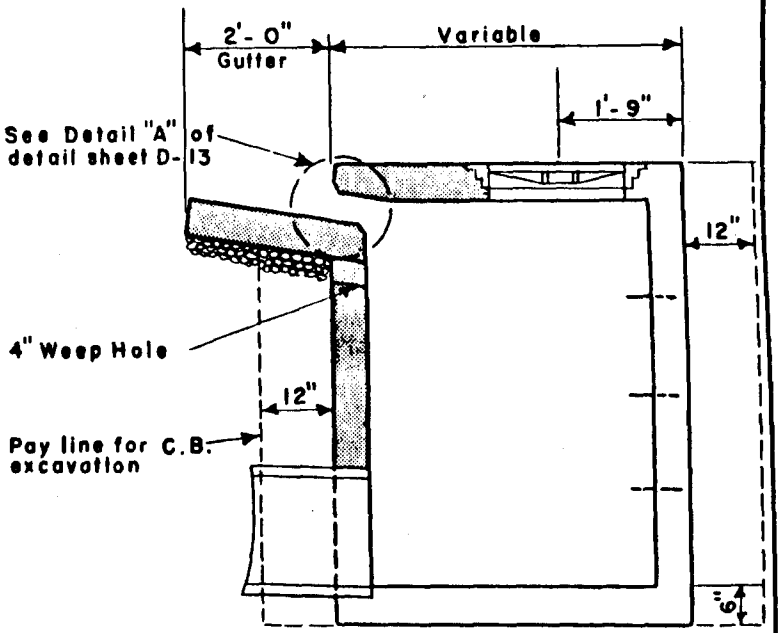

SECTION A-A

COUNTY OF KAUAI
CITY & COUNTY OF HONOLULU
COUNTY OF MAUI
COUNTY OF HAWAII

TYPE "D" CATCH BASIN

SCALE: 3/8" = 1'-0"

SEPTEMBER 1984

STANDARD DETAILS

D-11

TYPE "D" CATCH BASIN REINFORCEMENT DETAILS

SCALE: 3/8" = 1'- 0"

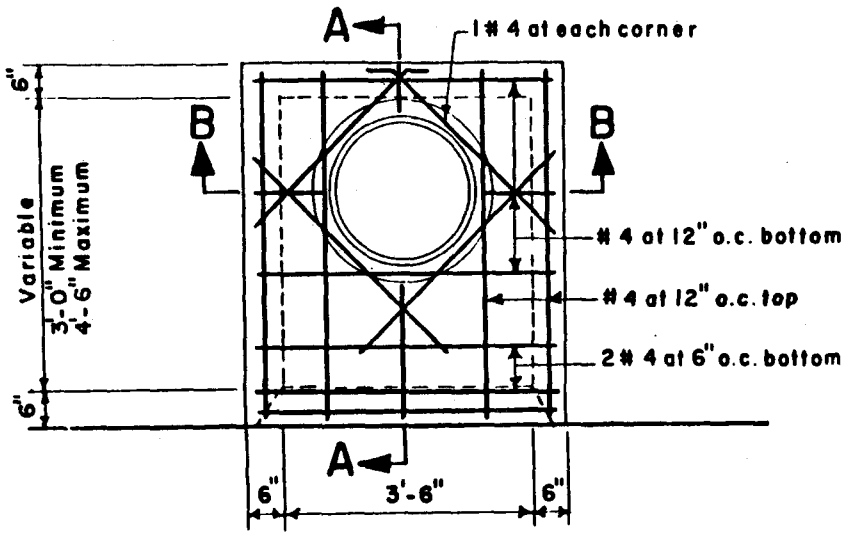

PLAN

NOTES:

1. See sheet D-13 for reinforcement at pipes and corners.
2. Spliced reinforcing bars shall be lapped at least 30 diameters.

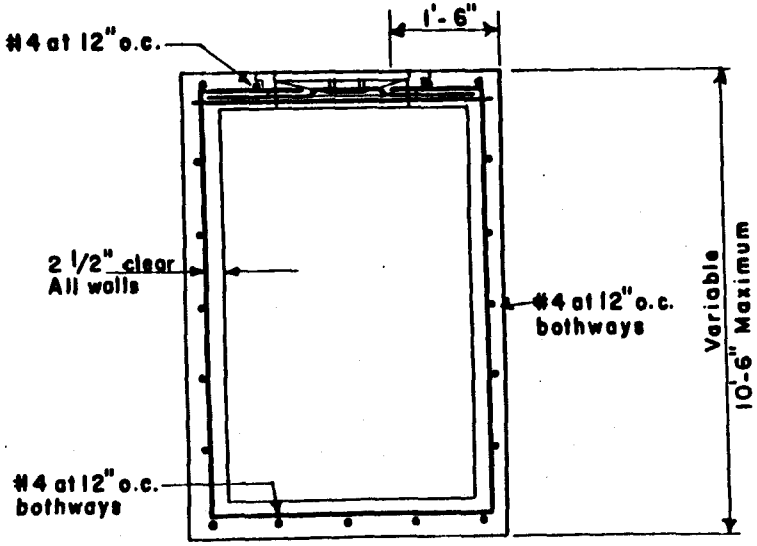

SECTION B-B

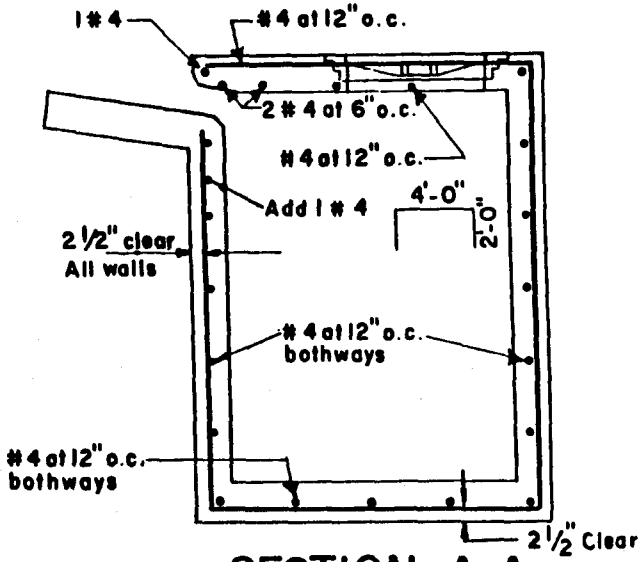

SECTION A-A

D-12

STANDARD DETAILS

TYPE "D" CATCH BASIN REINFORCEMENT DETAILS

SEPTEMBER 1984

SCALE: 3/8" = 1'-0"

COUNTY OF KAUAI
CITY & COUNTY OF HONOLULU
COUNTY OF MAUI
COUNTY OF HAWAII

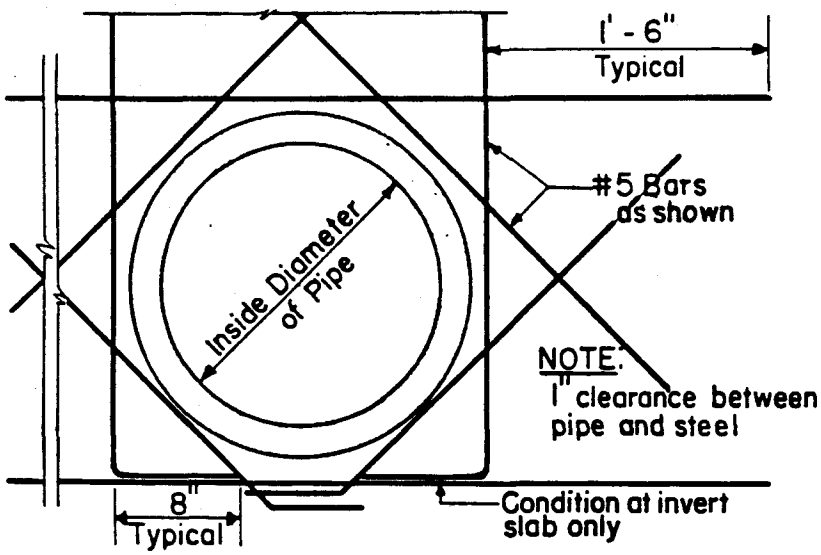

TYPICAL REINFORCEMENT AT PIPES

SCALE: 1" = 1' - 0"

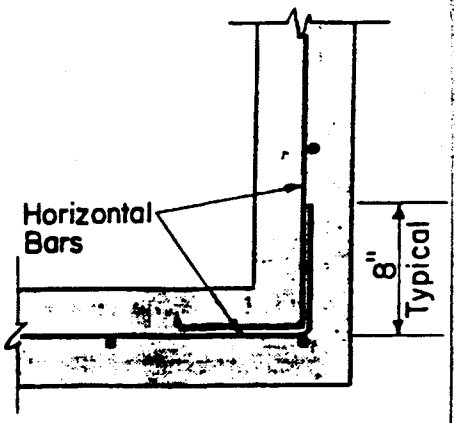

TYPICAL CORNER REINFORCEMENT LAPPING

SCALE: 1" = 1' - 0"

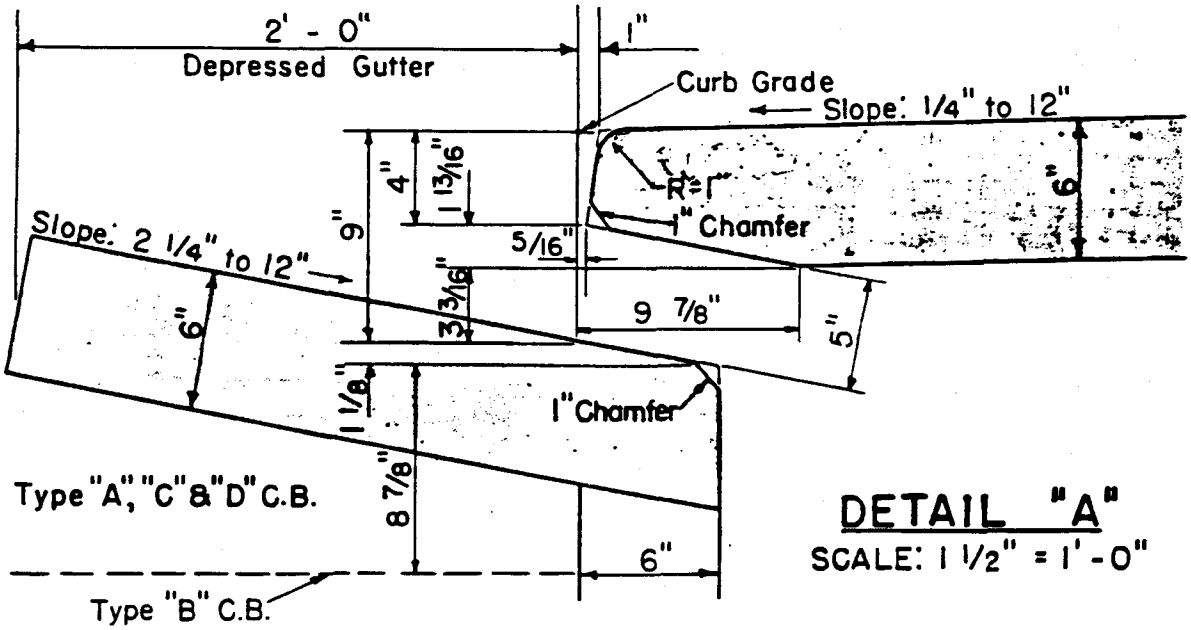

DETAIL "A"

SCALE: 1 1/2" = 1' - 0"

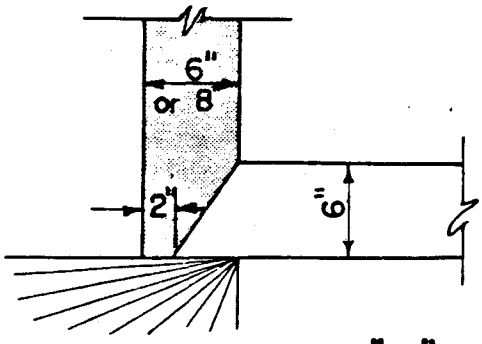

DETAIL "B"

SCALE: 1" = 1' - 0"

CATCH BASIN DETAILS

COUNTY OF KAUAI CITY & COUNTY OF HONOLULU COUNTY OF MAUI COUNTY OF HAWAII	CATCH BASIN DETAILS SCALE: AS NOTED SEPTEMBER 1984	STANDARD DETAILS	D-13

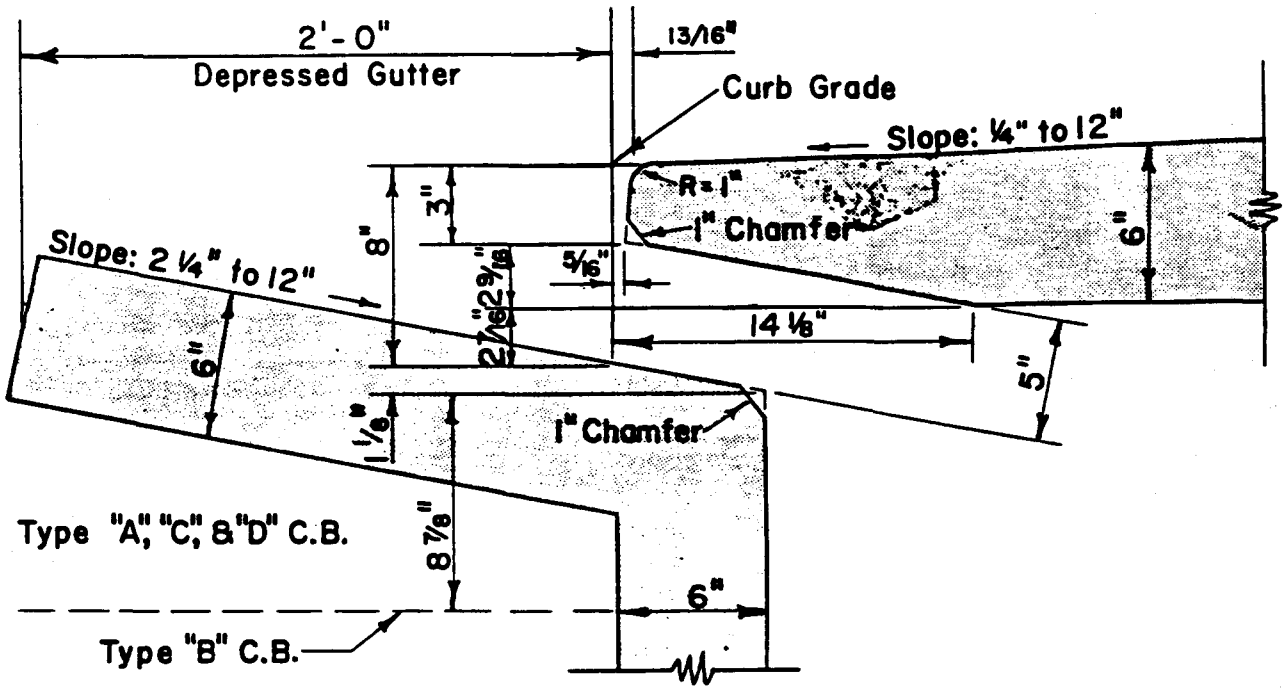

DETAIL "A_1"

SCALE: 1 1/2" = 1'-0"

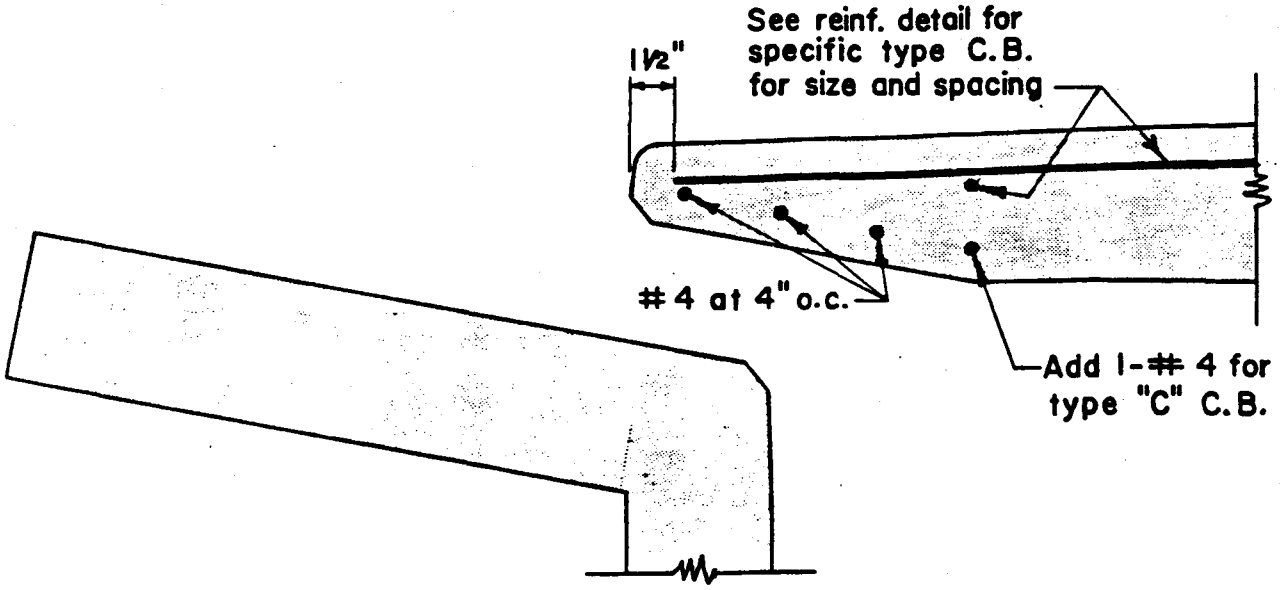

REINFORCEMENT FOR DETAIL "A_1"

SCALE: 1 1/2" = 1'-0"

DETAILS FOR CATCH BASIN WITH 5" CURB

D-14	STANDARD DETAILS	DETAILS FOR CATCH BASIN WITH 5" CURB SEPTEMBER 1984 SCALE: 1-1/2" = 1'-0"	COUNTY OF KAUAI CITY & COUNTY OF HONOLULU COUNTY OF MAUI COUNTY OF HAWAII

COUNTY OF KAUAI
CITY & COUNTY OF HONOLULU
COUNTY OF MAUI
COUNTY OF HAWAII

DEFLECTOR INLET FOR CATCH BASIN

SCALE: AS NOTED

SEPTEMBER 1984

STANDARD DETAILS

D-15

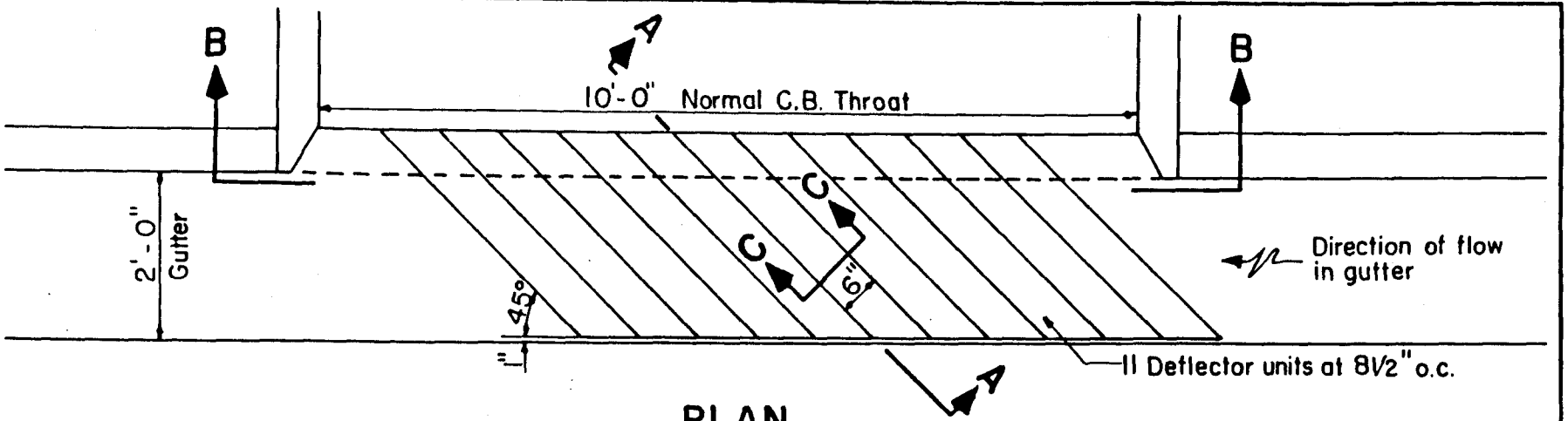

PLAN

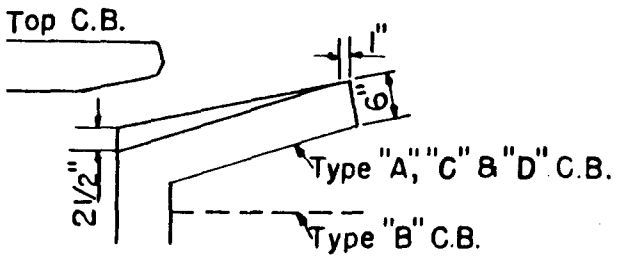

SECTION A-A

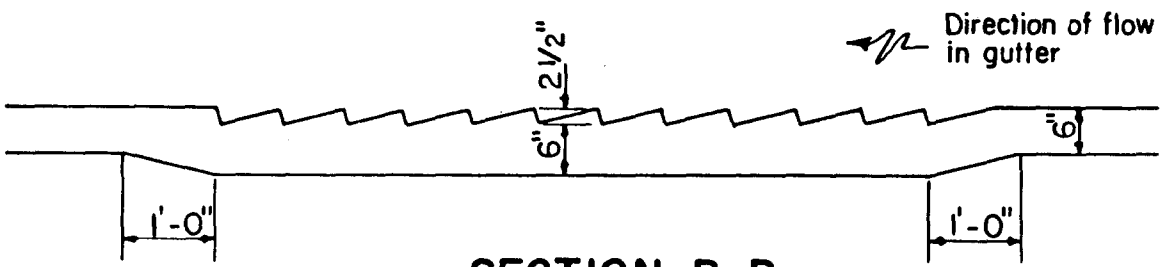

SECTION B-B

NOTE:
For 3'-6" C.B. throat construct 3 deflector units at 8 1/2" o.c.

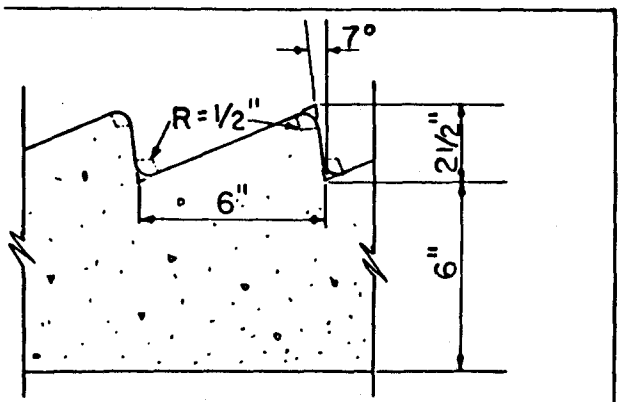

SECTION C-C
SCALE: 2" = 1'-0"

DEFLECTOR INLET FOR CATCH BASIN

SCALE: 1/2" = 1'-0"

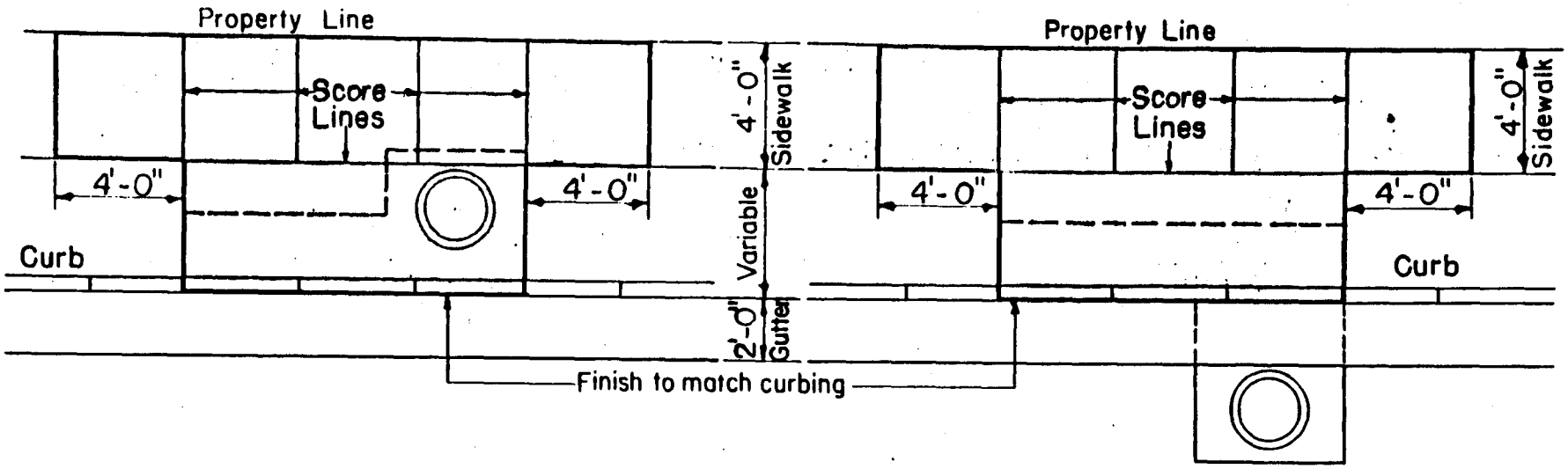

TYPE "A" CATCH BASIN

TYPE "B" CATCH BASIN

NOTES

1. A four foot section of sidewalk, on both sides of the catch basin, shall be poured monolithically with the top deck of the catch basin.
2. Pour top deck of catch basin after the curb and gutter are installed.
3. Scoring shall be done according to the drawing.
4. Monolithic construction of types "C" and "D" catch basins and sidewalk shall be similar to detail for type "B" catch basin.

MONOLITHIC CONSTRUCTION OF CATCH BASIN TOP SLAB AND SIDEWALK

MONOLITHIC CONSTRUCTION OF CATCH BASIN TOP SLAB AND SIDEWALK

SEPTEMBER 1984

SCALE: 3/16" = 1'-0"

COUNTY OF KAUAI
CITY & COUNTY OF HONOLULU
COUNTY OF MAUI
COUNTY OF HAWAII

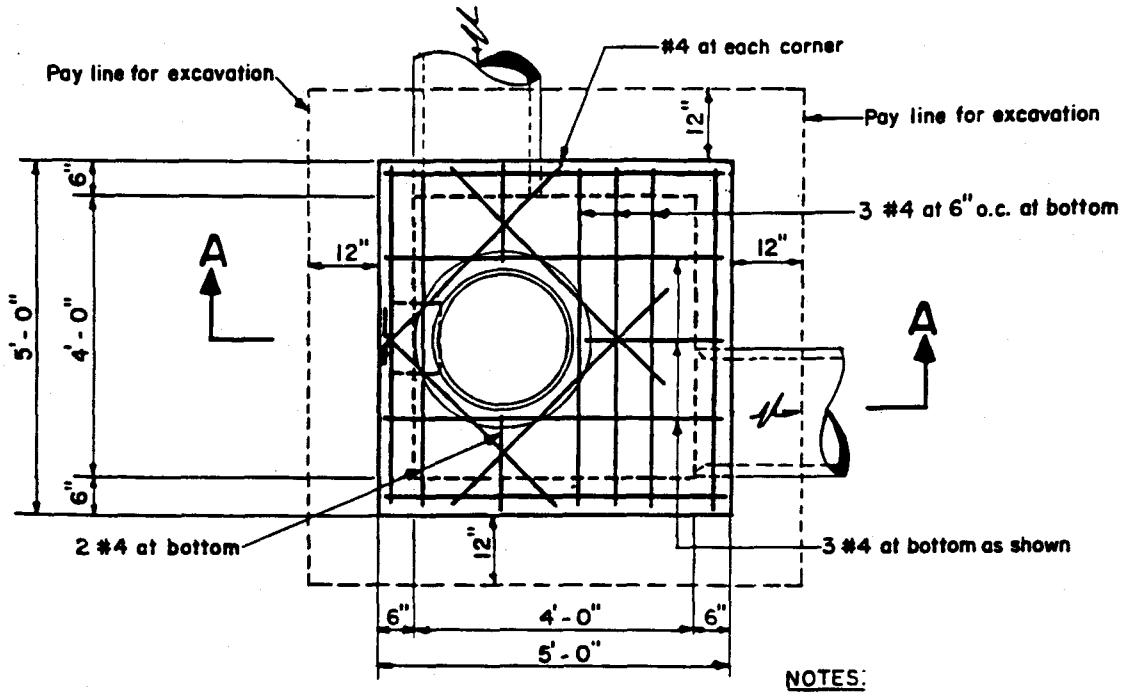

PLAN

NOTES:

1. See sheet D-26 for channelizing detail.
2. See sheet D-13 for reinforcement at pipes and at corners.
3. Rungs shall not be installed over a pipe connection and the lowest rung shall be not more than 2' - 0" above the invert.

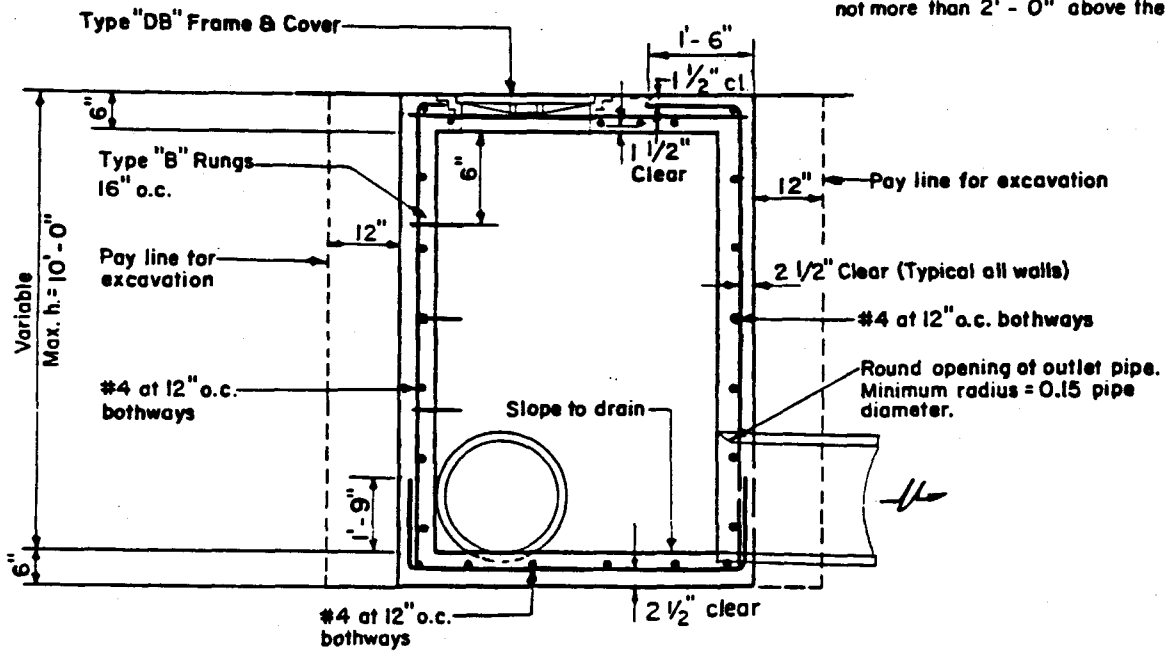

SECTION A-A

SHALLOW DRAIN MANHOLE FOR SIDEWALK AREA

COUNTY OF KAUAI CITY & COUNTY OF HONOLULU COUNTY OF MAUI COUNTY OF HAWAII	SHALLOW DRAIN MANHOLE FOR SIDEWALK AREA SCALE: 3/8" = 1'-0" SEPTEMBER 1984	STANDARD DETAILS	D-17

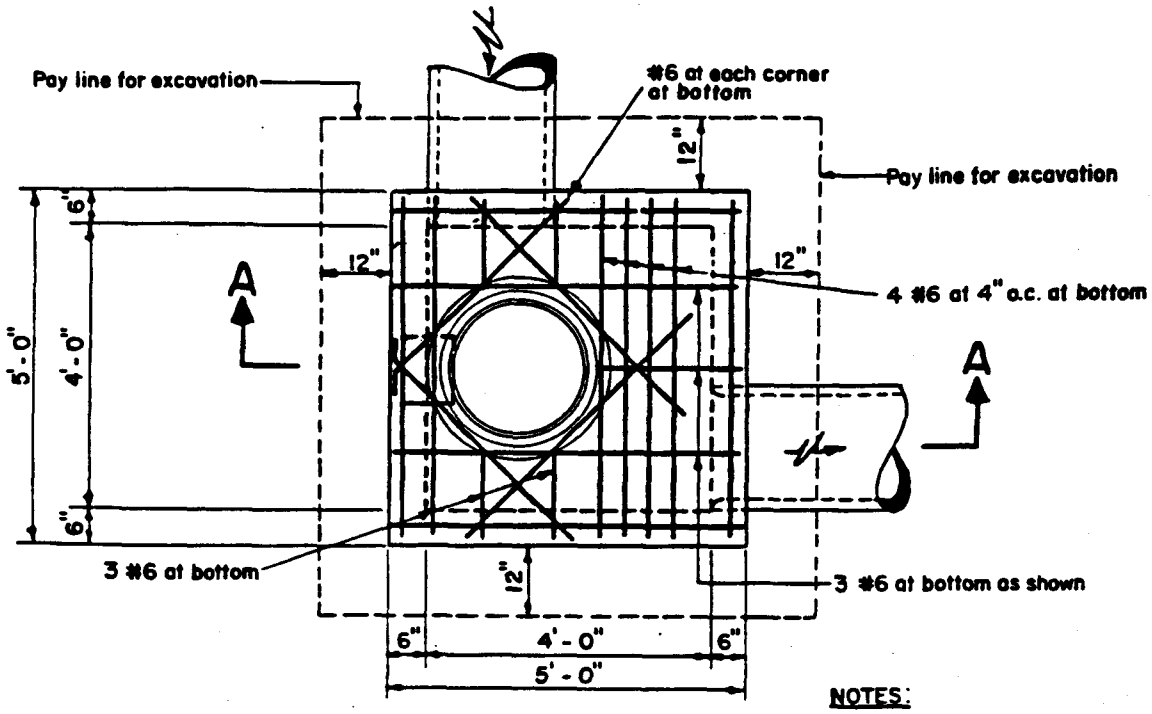

PLAN

NOTES:

1. See sheet D-26 for channelizing detail.
2. See sheet D-13 for reinforcement at pipes and corners.
3. Rungs shall not be installed over a pipe connection and the lowest rung shall be not more than 2'-0" above the invert.

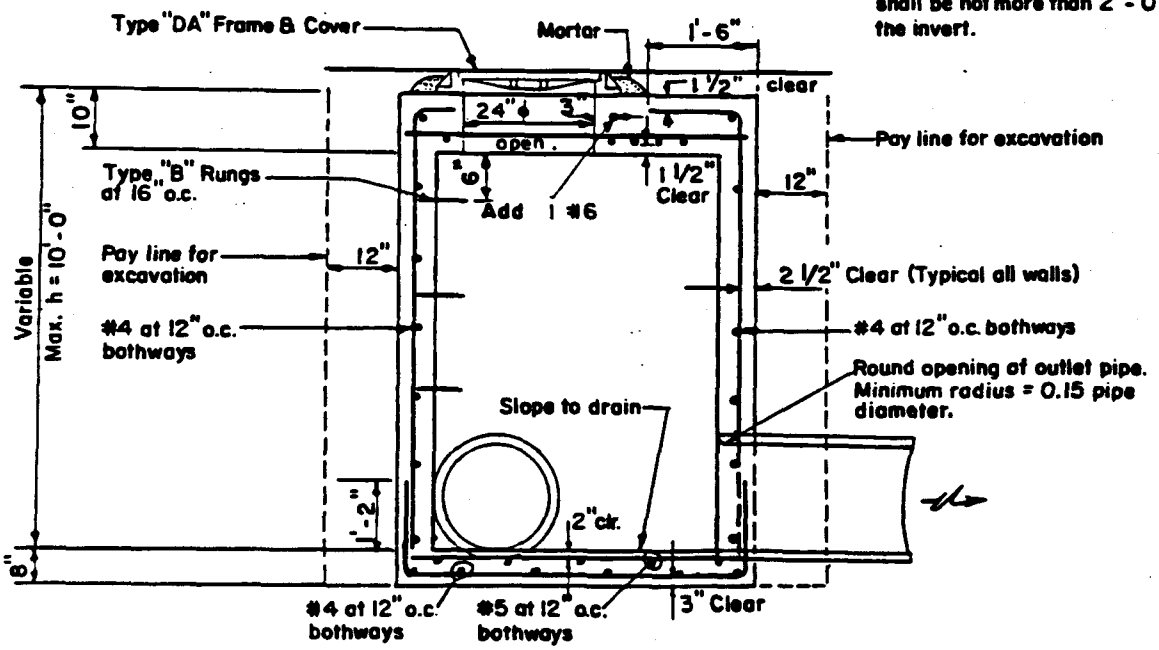

SECTION A-A

SHALLOW DRAIN MANHOLE FOR PAVEMENT AREA

D-18	STANDARD DETAILS	SHALLOW DRAIN MANHOLE FOR PAVEMENT AREA SEPTEMBER 1984 SCALE: 3/8" = 1'-0"	COUNTY OF KAUAI CITY & COUNTY OF HONOLULU COUNTY OF MAUI COUNTY OF HAWAII

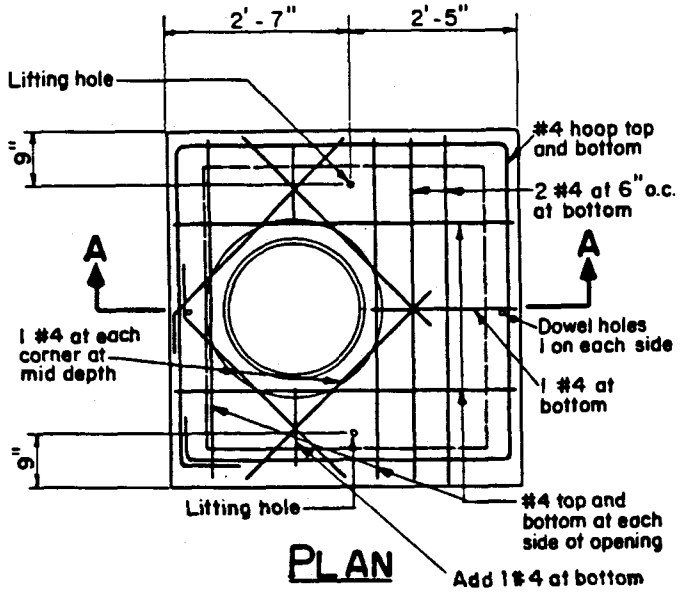

PLAN

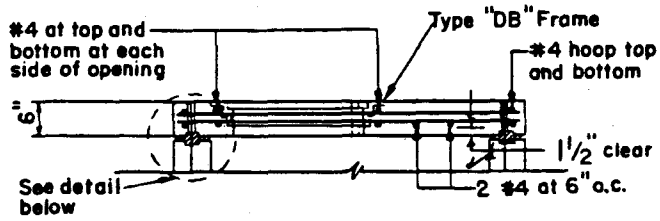

SECTION A-A

FOR SIDEWALK AREA

SCALE: 3/8" = 1'-0"

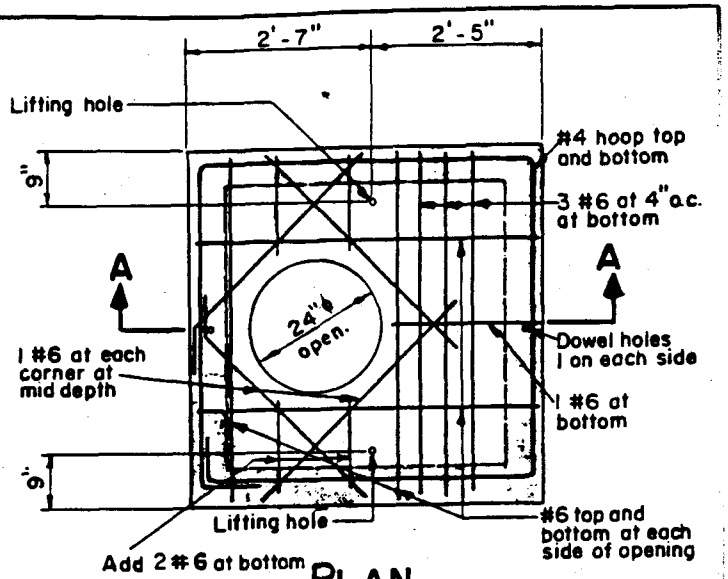

PLAN

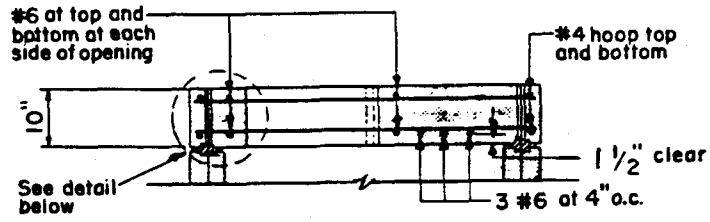

SECTION A-A

FOR PAVEMENT AREA

SCALE: 3/8" = 1'-0"

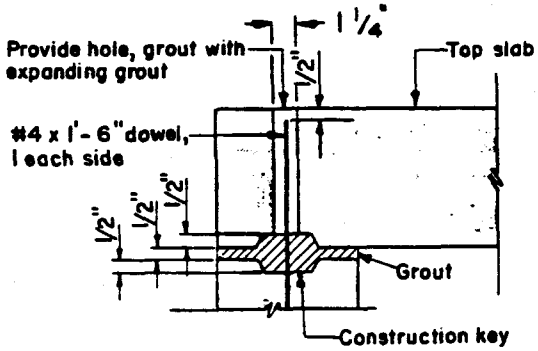

DETAIL

SCALE: 1 1/2" = 1'-0"

PRE-CAST TOP SLAB FOR SHALLOW DRAIN MANHOLE

COUNTY OF KAUAI CITY & COUNTY OF HONOLULU COUNTY OF MAUI COUNTY OF HAWAII	PRE-CAST TOP SLAB FOR SHALLOW DRAIN MANHOLE SCALE: AS NOTED SEPTEMBER 1984	STANDARD DETAILS	D-19

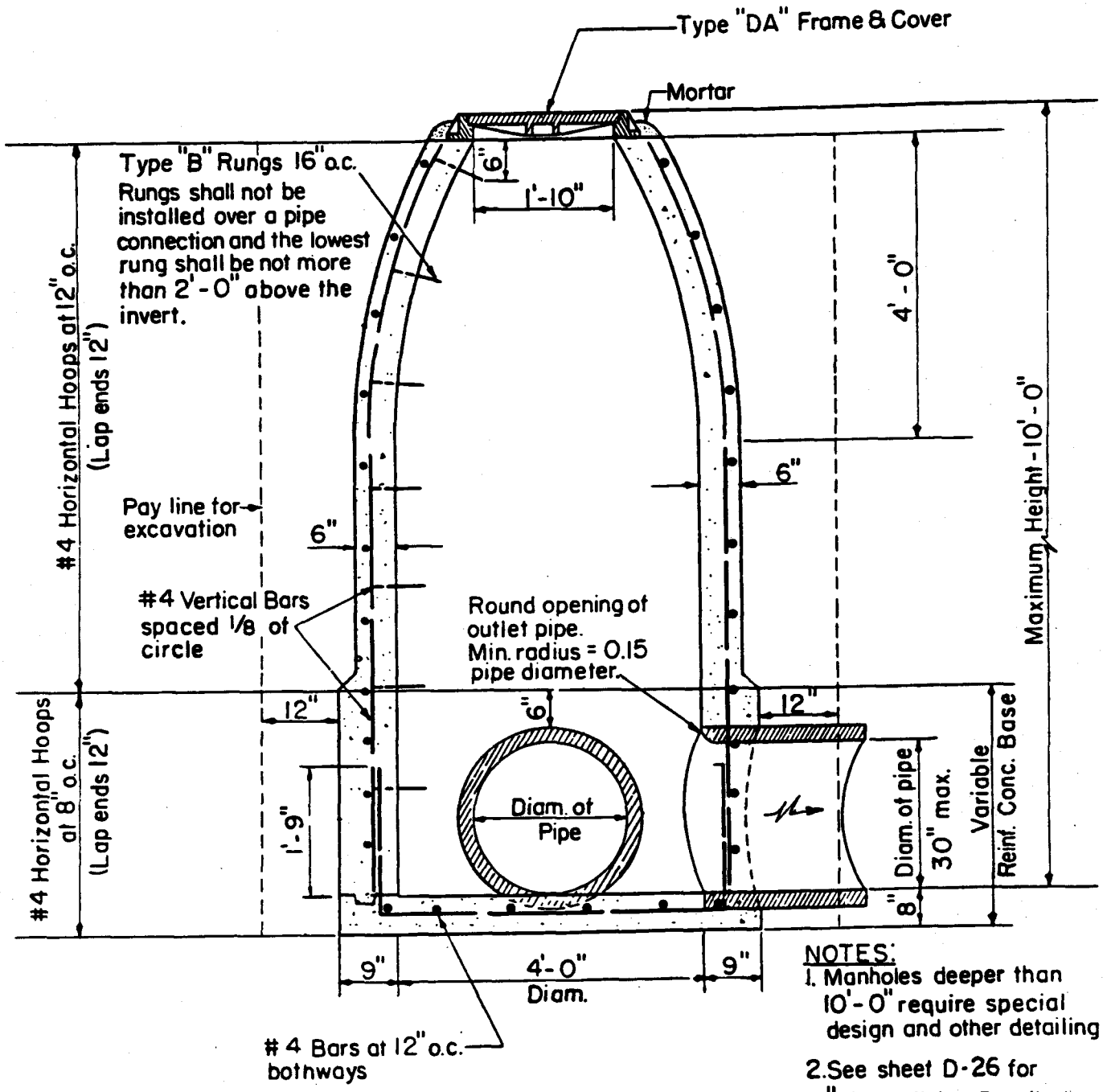

NOTES:

1. Manholes deeper than 10'-0" require special design and other detailing
2. See sheet D-26 for "Channelizing Details for Drain Manhole"

CONCRETE WALL DRAIN MANHOLE

SCALE: 1/2" = 1'-0"

D-20	STANDARD DETAILS	CONCRETE WALL DRAIN MANHOLE SEPTEMBER 1984 SCALE: 1/2" = 1'-0"	COUNTY OF KAUAI CITY & COUNTY OF HONOLULU COUNTY OF MAUI COUNTY OF HAWAII

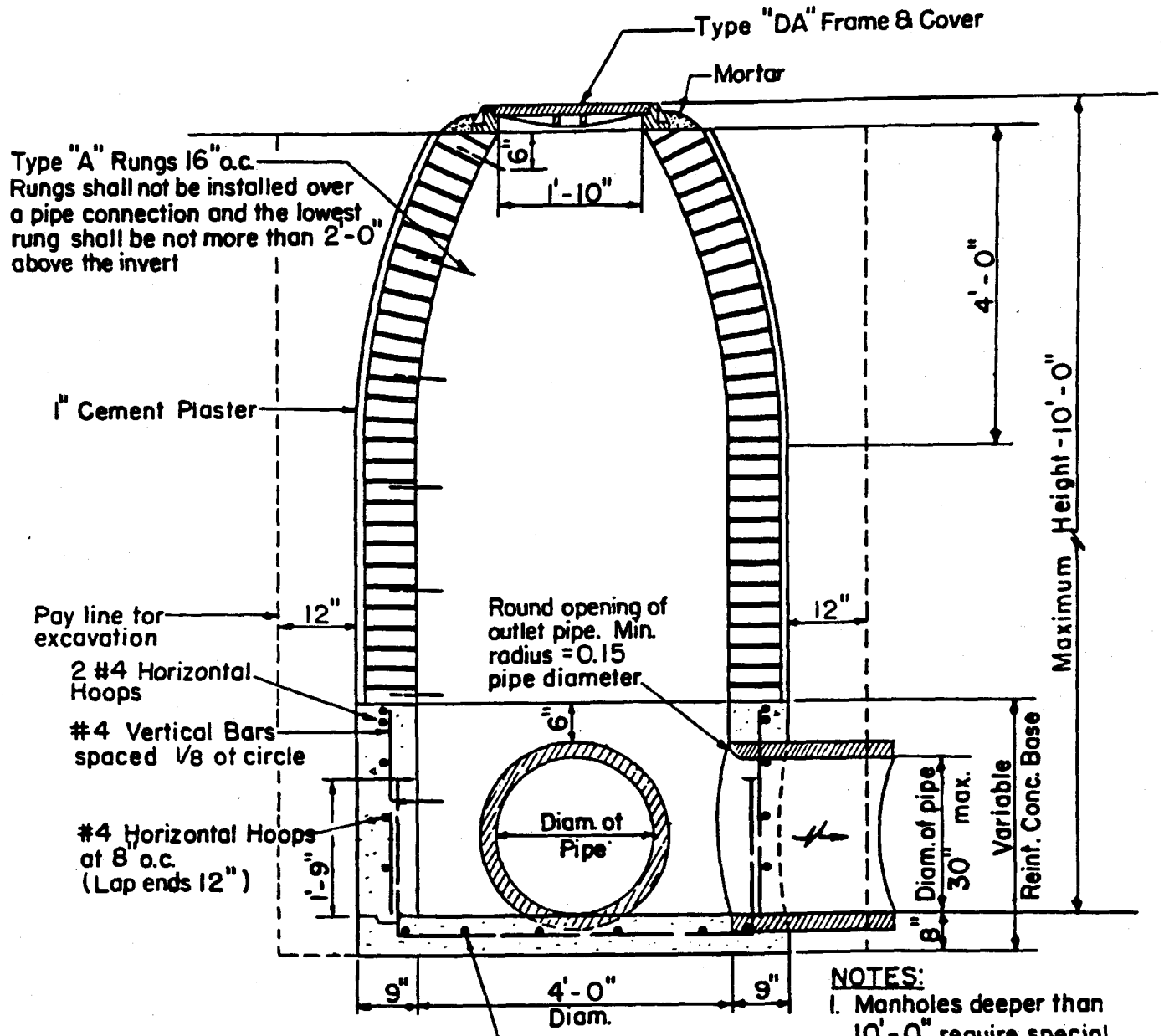

NOTES:

1. Manholes deeper than 10'-0" require special design and other detailing
2. See sheet D-26 for "Channelizing Details for Drain Manhole"

BRICK WALL DRAIN MANHOLE

SCALE: 1/2" = 1'-0"

COUNTY OF KAUAI CITY & COUNTY OF HONOLULU COUNTY OF MAUI COUNTY OF HAWAII	BRICK WALL DRAIN MANHOLE SCALE: 1/2" = 1'-0" SEPTEMBER 1984	STANDARD DETAILS	D-21

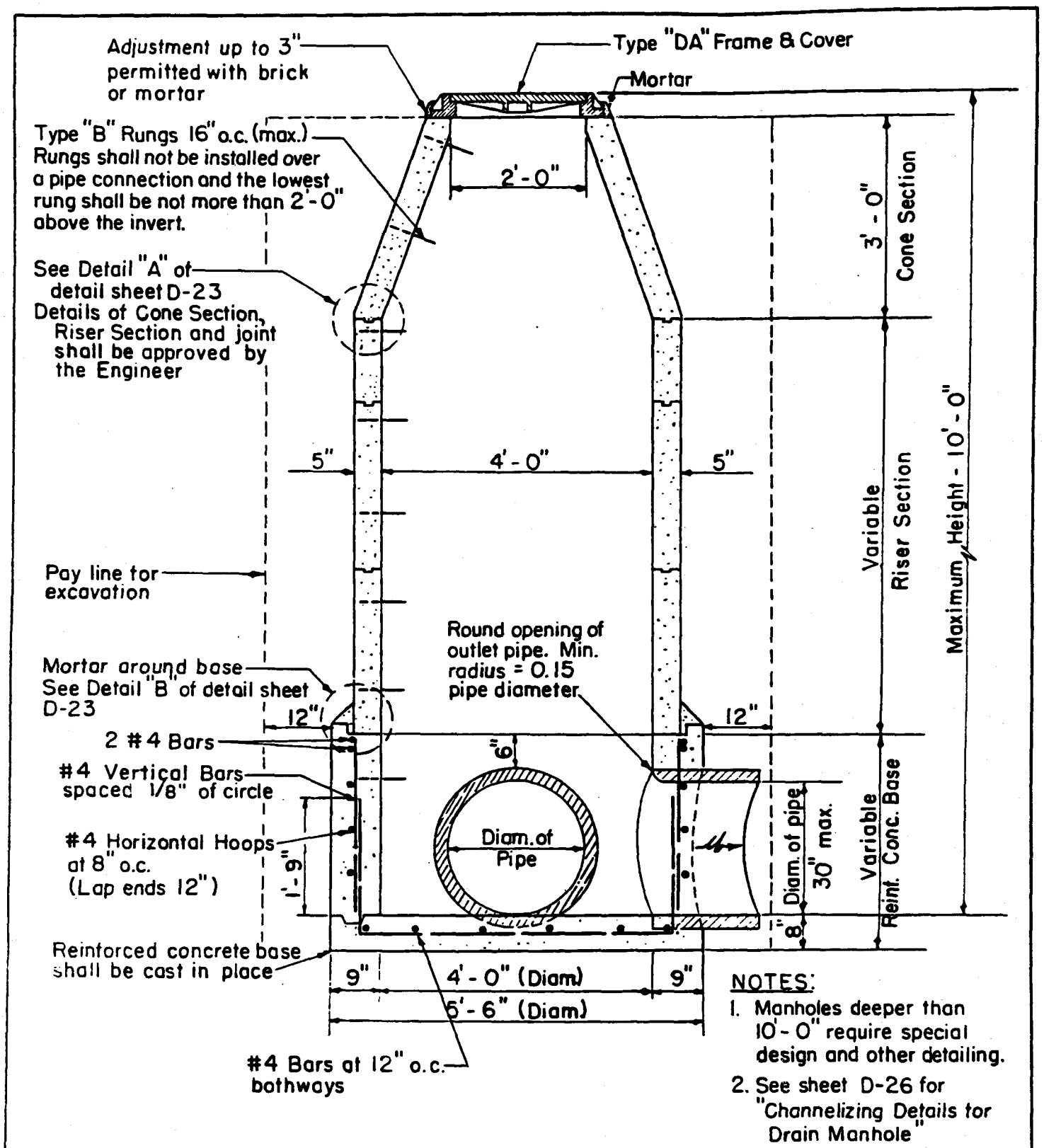

NOTES:

1. Manholes deeper than 10'-0" require special design and other detailing.
2. See sheet D-26 for "Channelizing Details for Drain Manhole"

PRE-CAST CONCRETE DRAIN MANHOLE

SCALE: 1/2" = 1'-0"

D-22	STANDARD DETAILS	PRE-CAST CONCRETE DRAIN MANHOLE SEPTEMBER 1984 S 1/2" = 1'-0"	COUNTY OF KAUAI CITY & COUNTY OF HONOLULU COUNTY OF MAUI COUNTY OF HAWAII

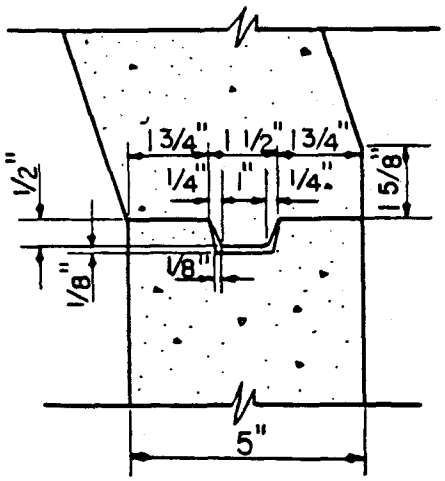

CONE SECTION

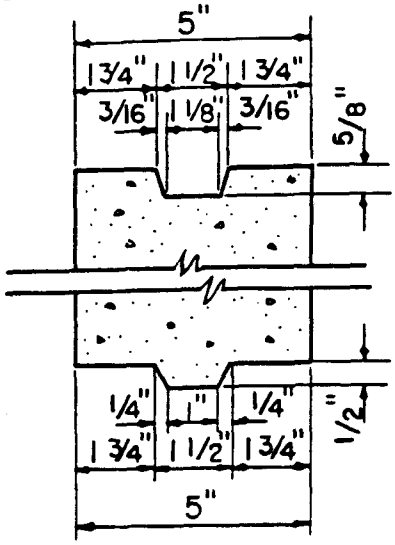

RISER SECTION

DETAIL "A"

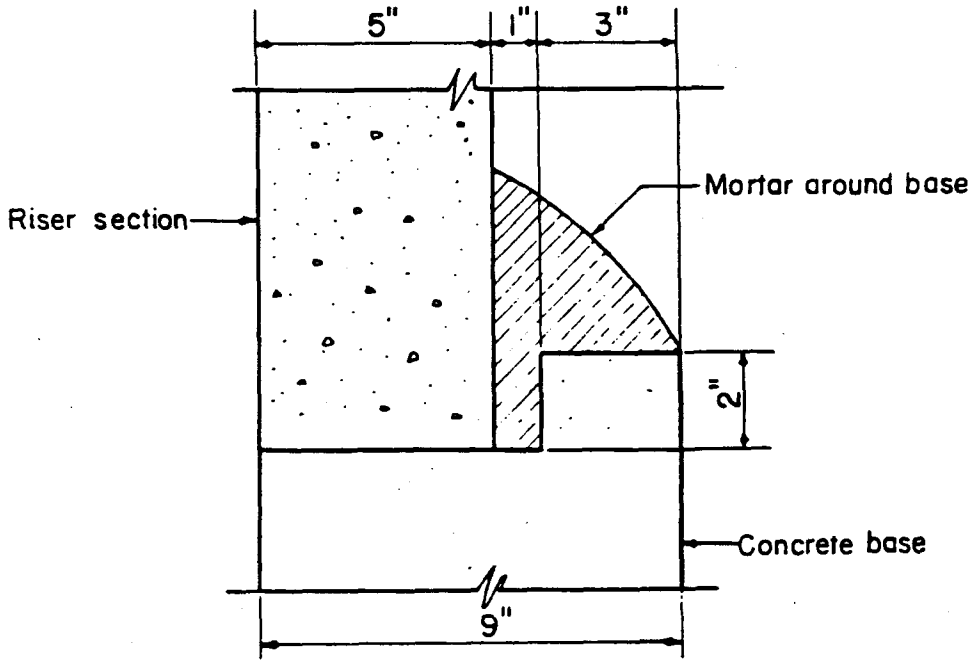

DETAIL "B"

PRE-CAST CONCRETE DRAIN MANHOLE DETAILS

COUNTY OF KAUAI CITY & COUNTY OF HONOLULU COUNTY OF MAUI COUNTY OF HAWAII	PRE-CAST CONCRETE DRAIN MANHOLE DETAILS SCALE: 3" = 1'-0" SEPTEMBER 1984	STANDARD DETAILS	D-23

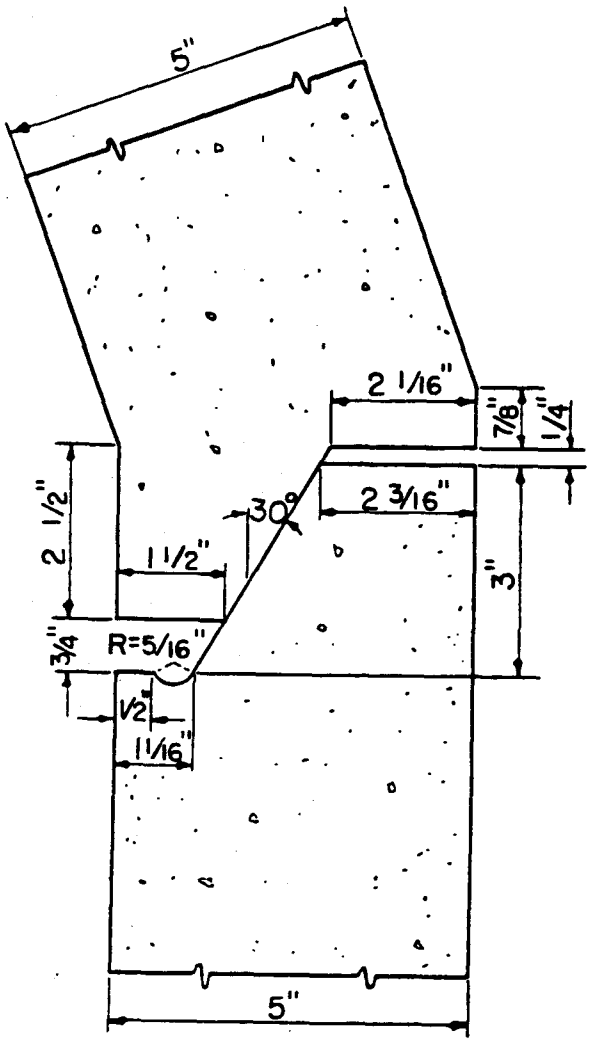

CONE SECTION

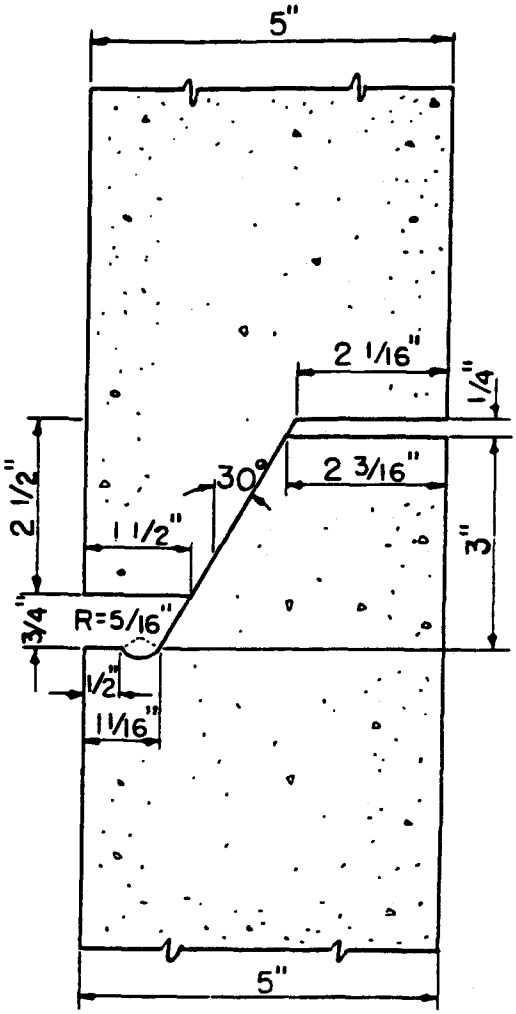

RISER SECTION

ALTERNATE DETAIL "A"

PRE-CAST CONCRETE DRAIN MANHOLE DETAILS

SCALE: 4 1/2" = 1' - 0"

D-24	STANDARD DETAILS	PRE-CAST CONCRETE DRAIN MANHOLE DETAILS SEPTEMBER 1984 SCALE: 4-1/2" = 1'-0"	COUNTY OF KAUAI CITY & COUNTY OF HONOLULU COUNTY OF MAUI COUNTY OF HAWAII

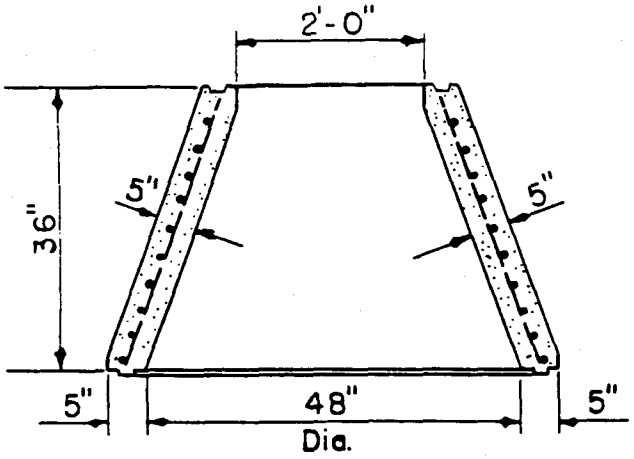

36" CONE

SCALE: 1/2" = 1'-0"

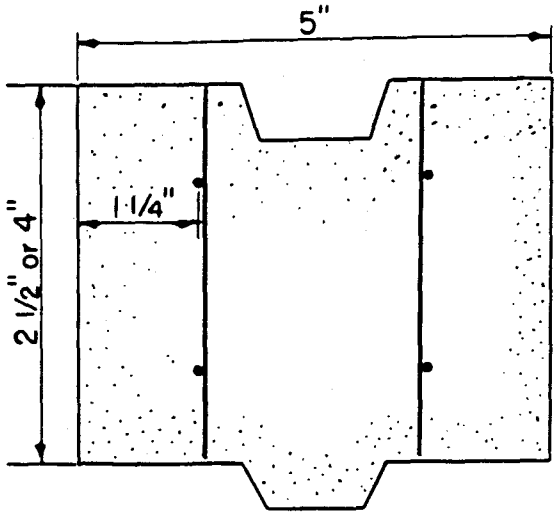

GRADE RING

SCALE: 1/2" = 1"

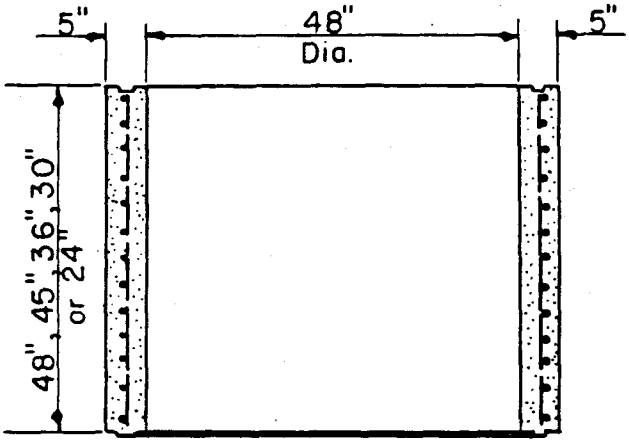

RISER

SCALE: 1/2" = 1'-0"

SECTION	A_s/L.F.	TOTAL WT. LB.
48" x 48" Riser	0.15	2,752
48" x 45" Riser	0.15	2,580
48" x 36" Riser	0.15	2,064
48" x 30" Riser	0.15	1,720
48" x 24" Riser	0.15	1,376
48" x 15" Riser	0.15	860
48" x 12" Riser	0.15	688
48" x 24" x 36" Cone	0.16	2,100
22" x 4" Grade Ring	0.12	200
22" x 2 1/2" Grade Ring	0.12	95
48" x 32" Riser	0.15	2,691
48" x 16" Riser	0.15	1,345

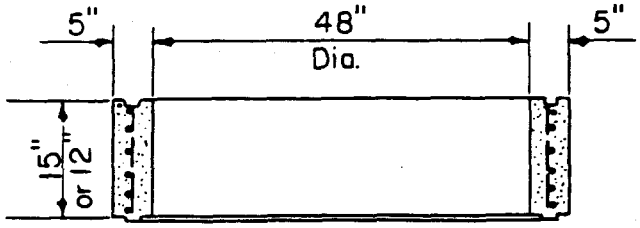

RISER

SCALE: 1/2" = 1'-0"

NOTES

1. Pre-cast sections shall conform to ASTM C 478 - 61T.
2. Manufacturers may submit to the Engineer for approval, prior to manufacturing, designs other than those shown on this sheet.

COUNTY OF KAUAI CITY & COUNTY OF HONOLULU COUNTY OF MAUI COUNTY OF HAWAII	PRE-CAST CONCRETE DRAIN MANHOLE DETAILS SCALE: 1/2" = 1'-0" SEPTEMBER 1984	STANDARD DETAILS	D-25

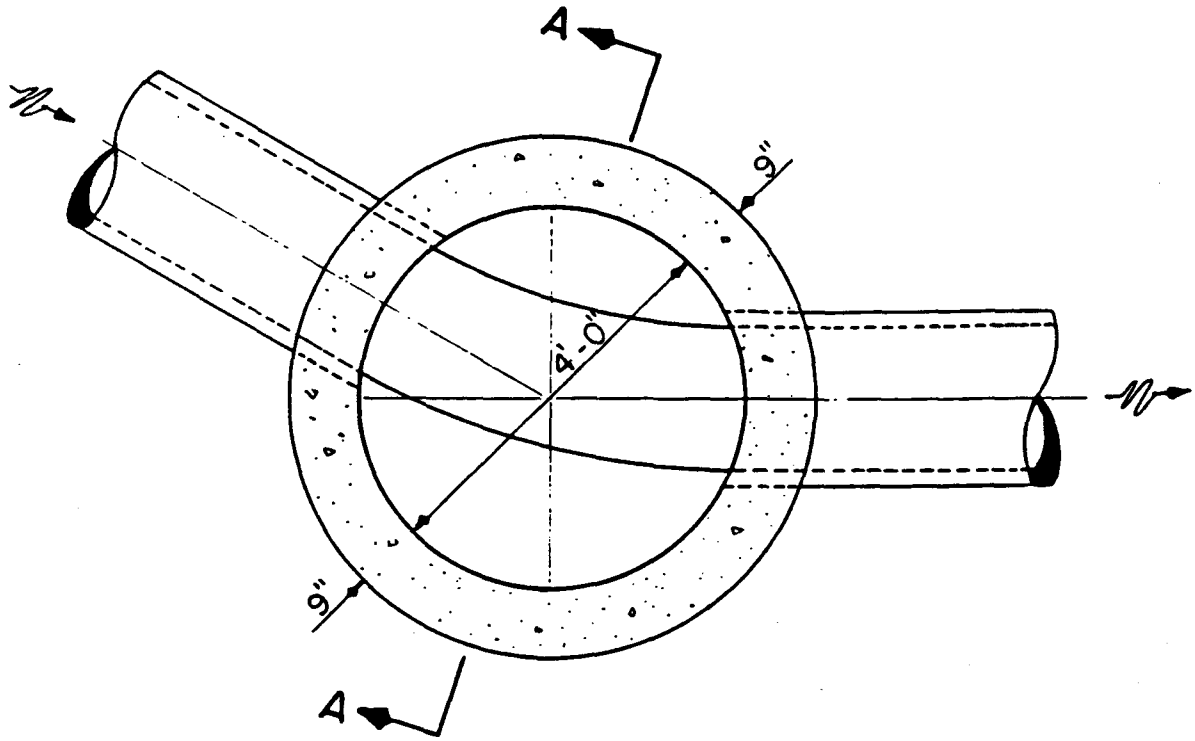

PLAN

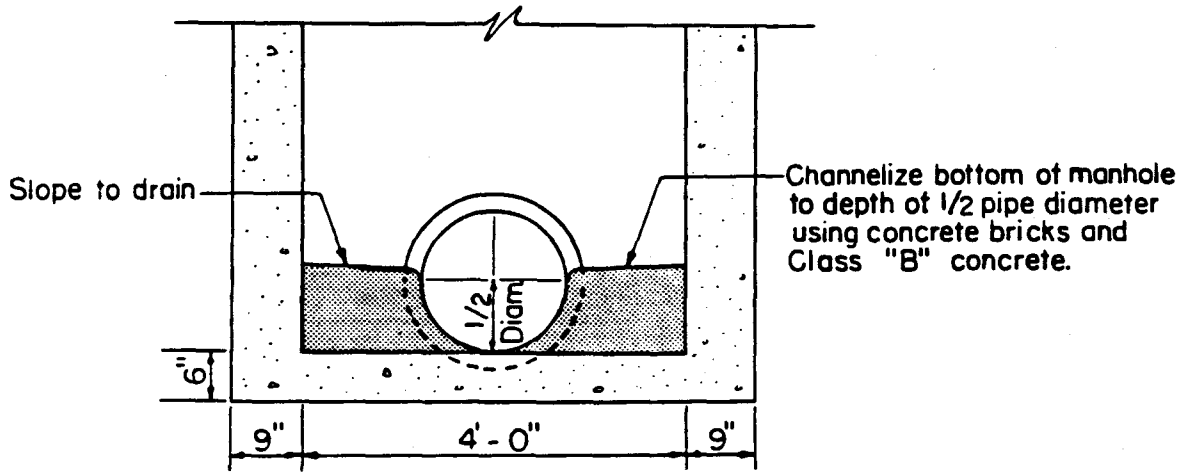

SECTION A-A

CHANNELIZING DETAILS FOR DRAIN MANHOLE

SCALE: 1/2" = 1'-0"

D-26	STANDARD DETAILS	CHANNELIZING DETAILS FOR DRAIN MANHOLE SEPTEMBER 1984 SCALE: 1/2" = 1'-0"	COUNTY OF KAUAI CITY & COUNTY OF HONOLULU COUNTY OF MAUI COUNTY OF HAWAII

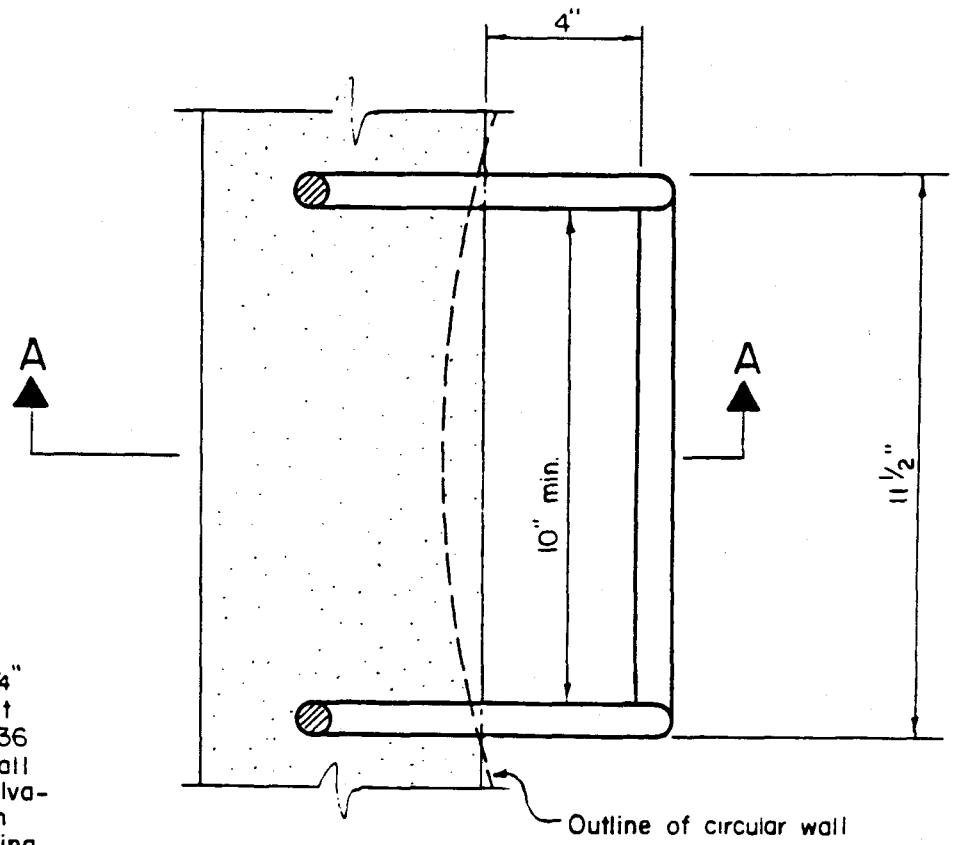

SECTION

NOTES:

1. Rungs shall be 3/4" diameter wrought iron or ASTM A36 steel rods and shall be hot-dipped galvanized or cadmium plated after bending.

2. Any deviation from these details must be approved by the Chief Engineer.

TYPE	WALLS	L_1	L_2
Type A	Brick	13 1/8"	7 5/8"
Type B	Concrete	9"	4 1/4"
Type C	Precast	7 3/4"	3"

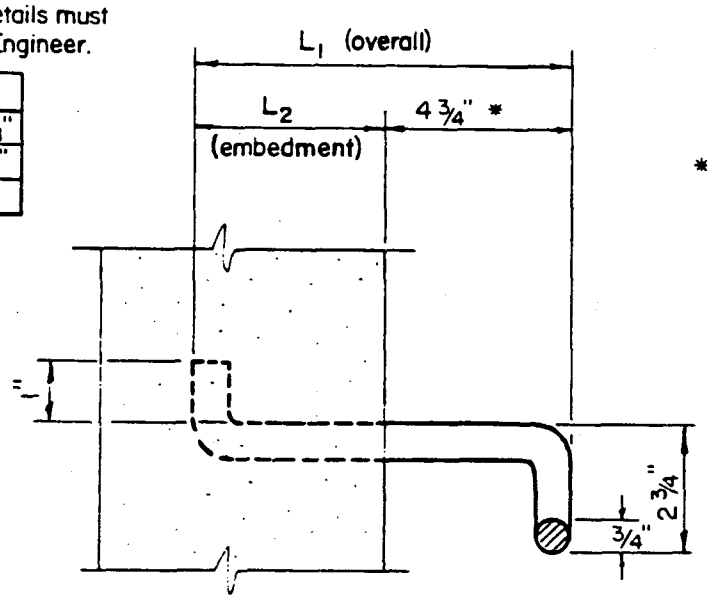

* 3" for one rung at top of opening.

SECTION A-A

COUNTY OF KAUAI CITY & COUNTY OF HONOLULU COUNTY OF MAUI COUNTY OF HAWAII	RUNGS FOR CATCH BASINS AND MANHOLES SCALE: 3" = 1'-0" SEPTEMBER 1984	STANDARD DETAILS	D-27

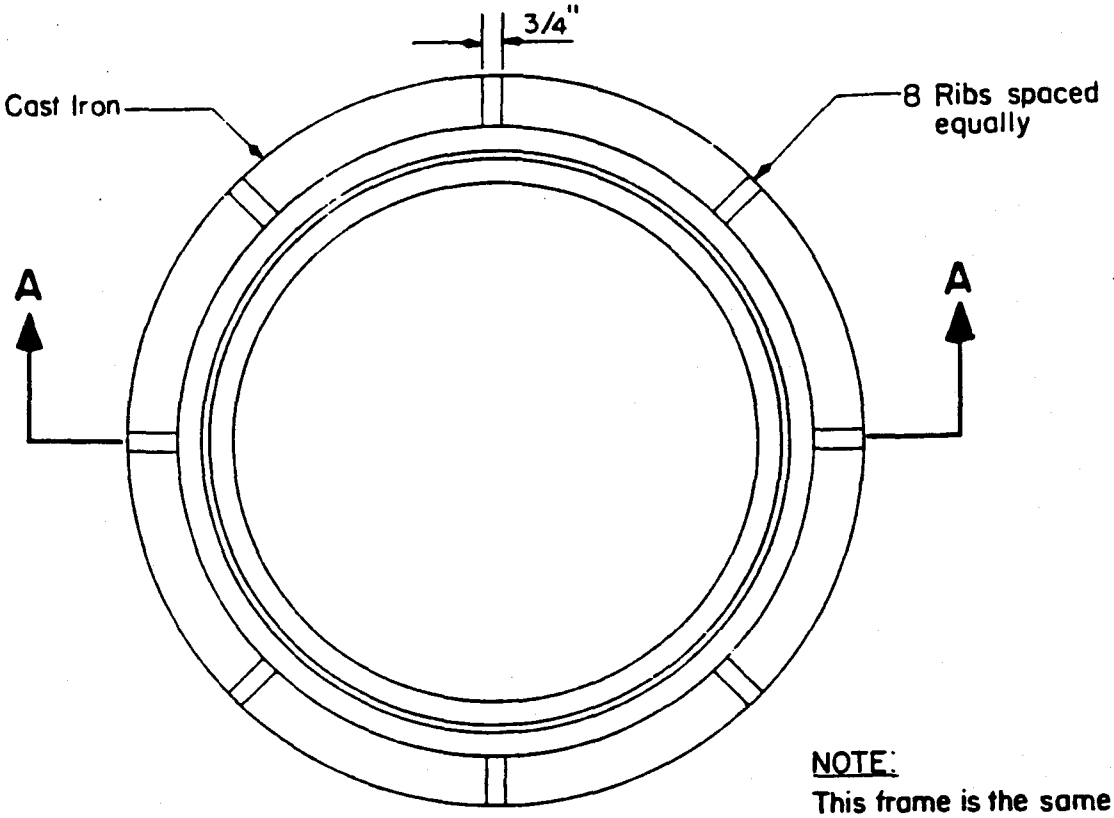

NOTE:
This frame is the same as sewer manhole frame Type "SA".

PLAN

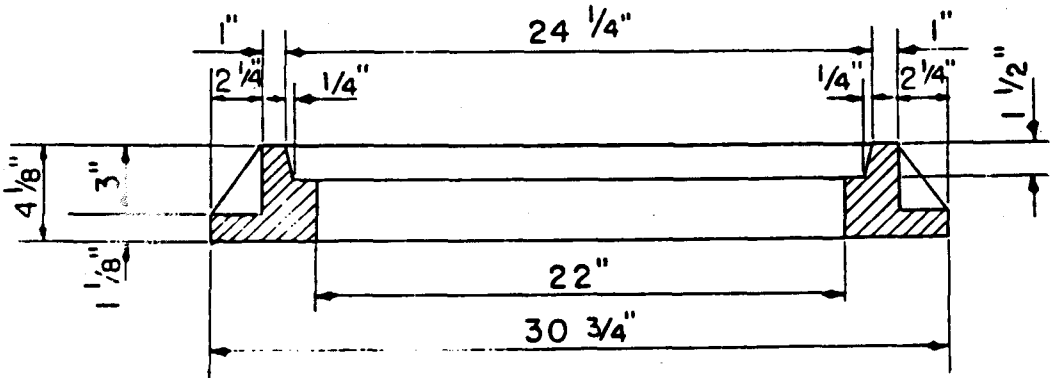

SECTION A-A

TYPE "DA" FRAME FOR CATCH BASIN AND MANHOLE

D-28	STANDARD DETAILS	TYPE "DA" FRAME FOR CATCH BASIN AND MANHOLE SEPTEMBER 1984 SCALE: 1-1/2" = 1'-0"	COUNTY OF KAUAI CITY & COUNTY OF HONOLULU COUNTY OF MAUI COUNTY OF HAWAII

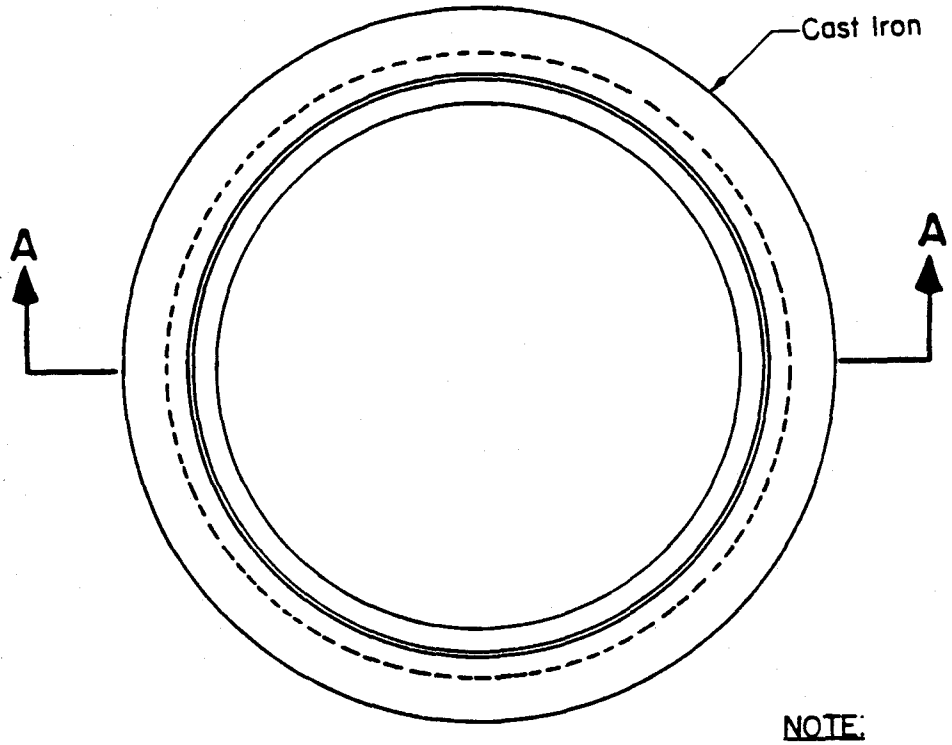

PLAN

NOTE:
This frame is the same as sewer manhole frame Type "SD".

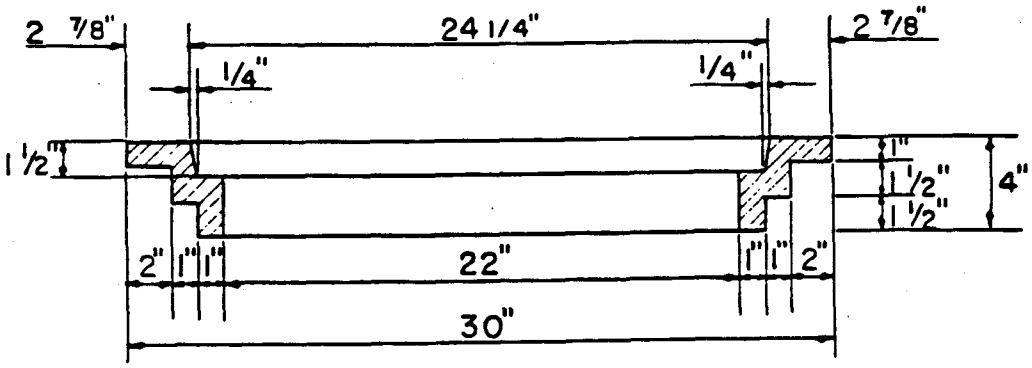

SECTION A - A

TYPE "DB" FRAME FOR CATCH BASIN AND MANHOLE

COUNTY OF KAUAI CITY & COUNTY OF HONOLULU COUNTY OF MAUI COUNTY OF HAWAII	TYPE "DB" FRAME FOR CATCH BASIN AND MANHOLE SCALE: 1-1/2" = 1'-0" SEPTEMBER 1984	STANDARD DETAILS	D-29

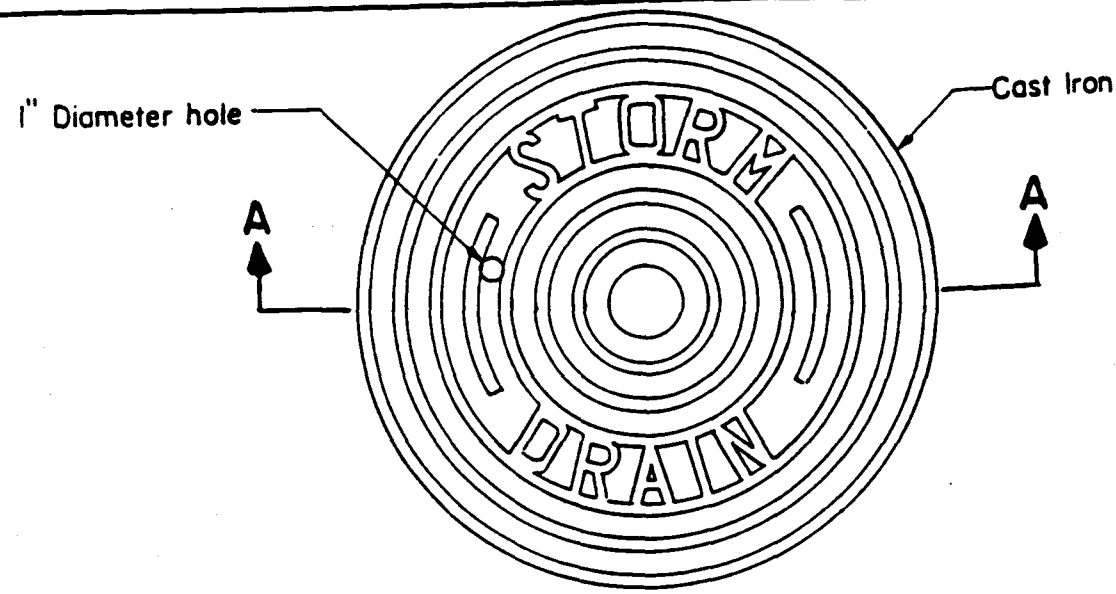

PLAN

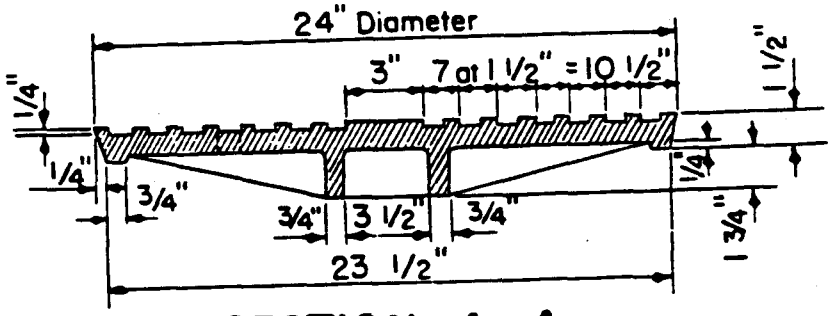

SECTION A - A

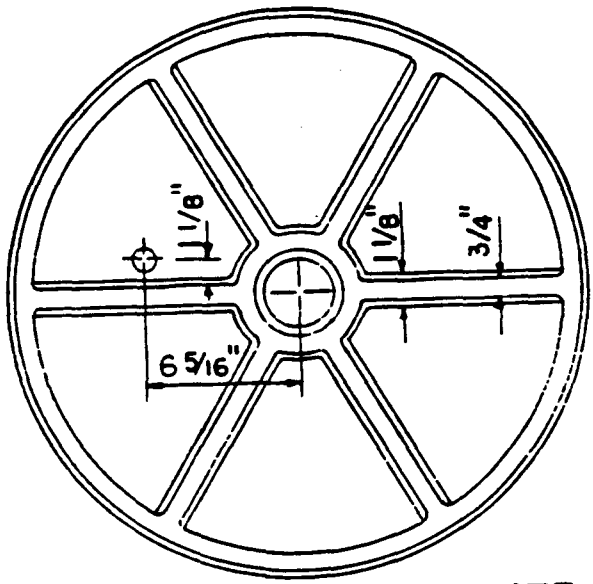

BOTTOM VIEW OF COVER

CATCH BASIN AND MANHOLE COVER

D-30	STANDARD DETAILS	CATCH BASIN AND MANHOLE COVER SEPTEMBER 1984 SCALE: 1-1/2" = 1'-0"	COUNTY OF KAUAI CITY & COUNTY OF HONOLULU COUNTY OF MAUI COUNTY OF HAWAII

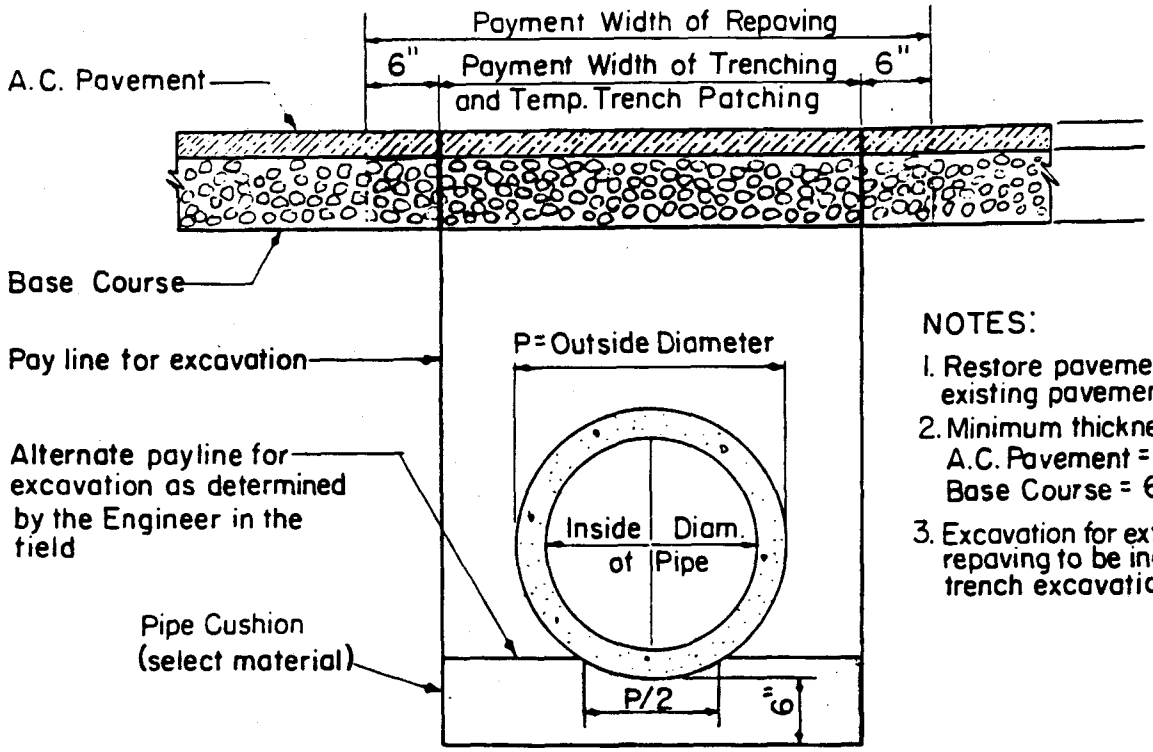

NOTES:

1. Restore pavement to match existing pavement.
2. Minimum thickness of pavement:
   A.C. Pavement = 2"
   Base Course = 6"
3. Excavation for extra 6" width of repaving to be included with trench excavation.

ELEVATION

SCALE: 3/4" = 1'-0"

DRAIN PIPE SIZE	PAYMENT WIDTH OF TRENCHING	WIDTH OF REPAVING
18"	36"	48"
24"	48"	60"
30"	56"	68"
36"	64"	76"
42"	72"	84"
48"	80"	92"
54"	88"	100"
60"	96"	108"

PAYMENT TRENCH WIDTH AND REPAVING FOR DRAIN PIPES

COUNTY OF KAUAI CITY & COUNTY OF HONOLULU COUNTY OF MAUI COUNTY OF HAWAII	PAYMENT TRENCH WIDTH AND REPAVING FOR DRAIN PIPES SCALE: 3/4" = 1'-0" SEPTEMBER 1984	STANDARD DETAILS	D-31

D-32

STANDARD DETAILS

SIDEWALK CULVERT

SEPTEMBER 1984

SCALE: AS NOTED

COUNTY OF KAUAI
CITY & COUNTY OF HONOLULU
COUNTY OF MAUI
COUNTY OF HAWAII

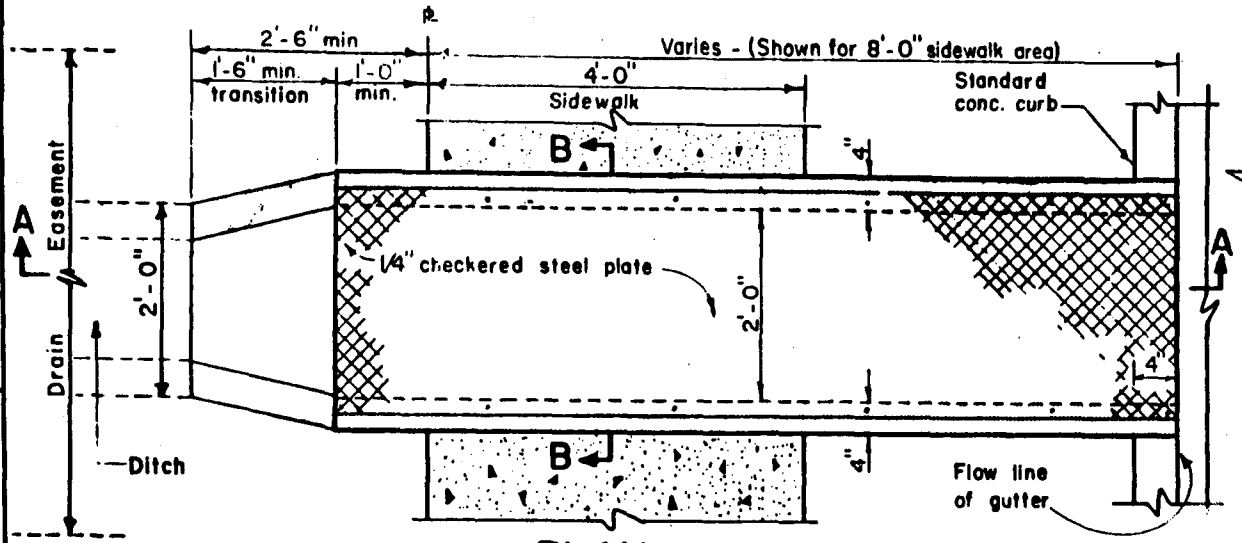

PLAN

SCALE: 1/2" = 1'-0"

NOTE:

All steel parts to be galvanized.

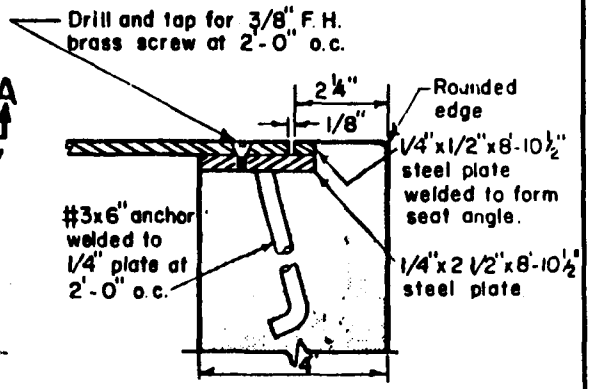

DETAIL "A"

SCALE: 3" = 1'-0"

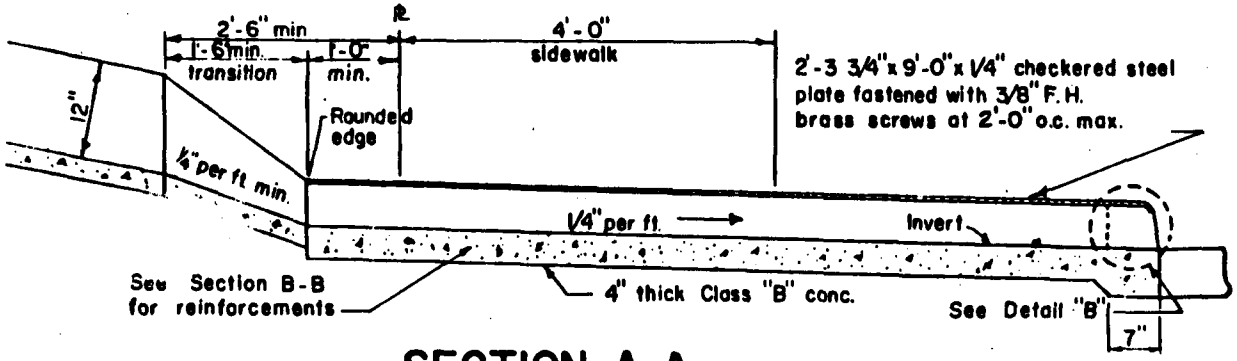

SECTION A-A

SCALE: 1/2" = 1'-0"

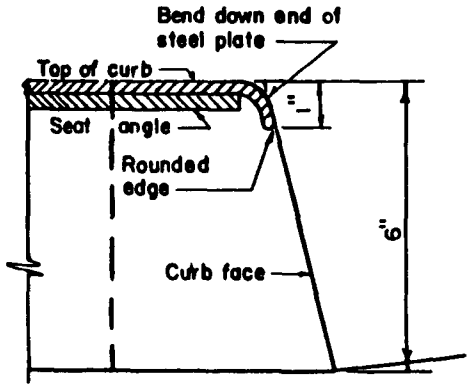

DETAIL "B"

SCALE: 3" = 1'-0"

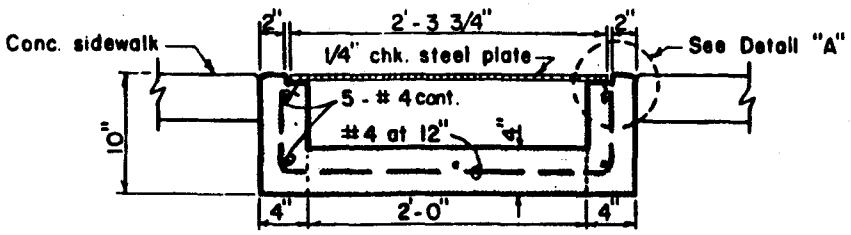

SECTION B-B

SCALE: 3/4" = 1'-0"

SIDEWALK CULVERT

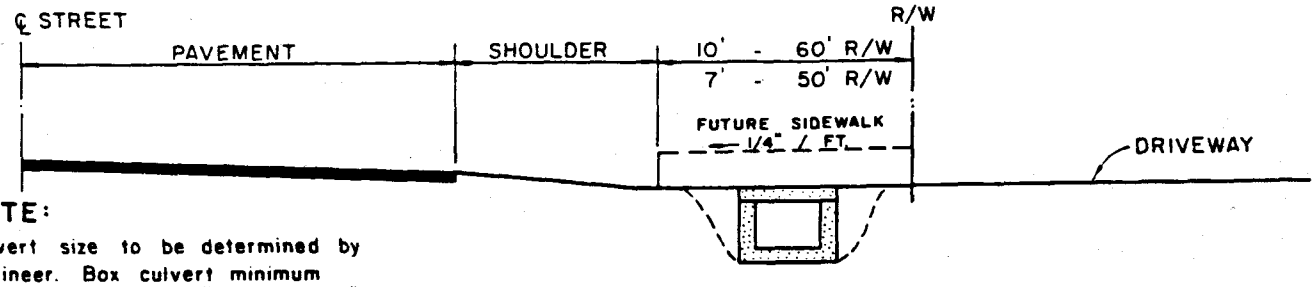

NOTE:
Culvert size to be determined by Engineer. Box culvert minimum inside dimensions 16" deep x 24" wide. All form material to be removed upon completion of construction.

SECTION

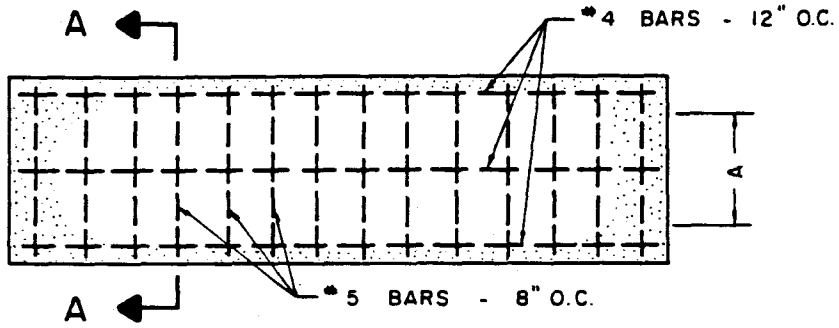

DETAIL

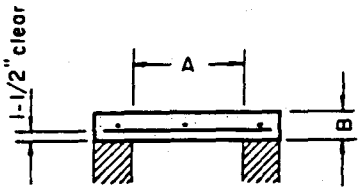

SECTION A-A

A	B
2'	4"
3'	5"
4'	6"
5'	6"

#4 BAR = 1/2" DIA.
#5 BAR = 5/8" DIA.

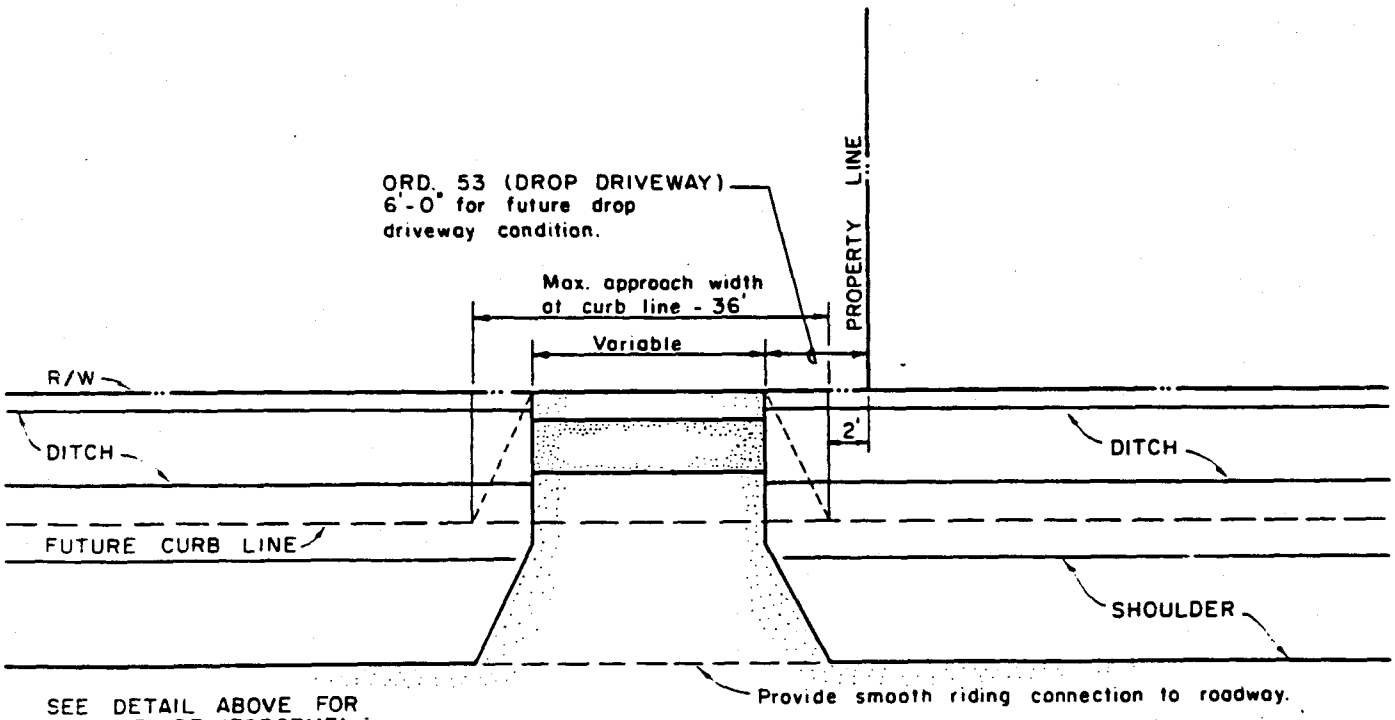

SEE DETAIL ABOVE FOR CULVERT REINFORCEMENT REQUIREMENTS.

PLAN

COUNTY OF HAWAII	DRIVEWAY DRAINAGE - BOX CULVERT NOT TO SCALE SEPTEMBER 1984	STANDARD DETAILS	D-33

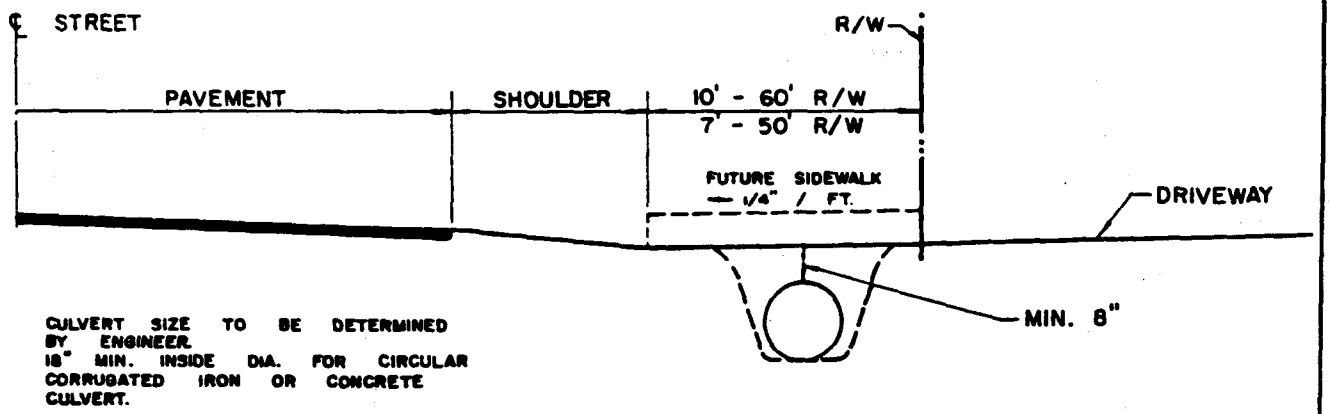

CULVERT SIZE TO BE DETERMINED BY ENGINEER.
18" MIN. INSIDE DIA. FOR CIRCULAR CORRUGATED IRON OR CONCRETE CULVERT.

SECTION

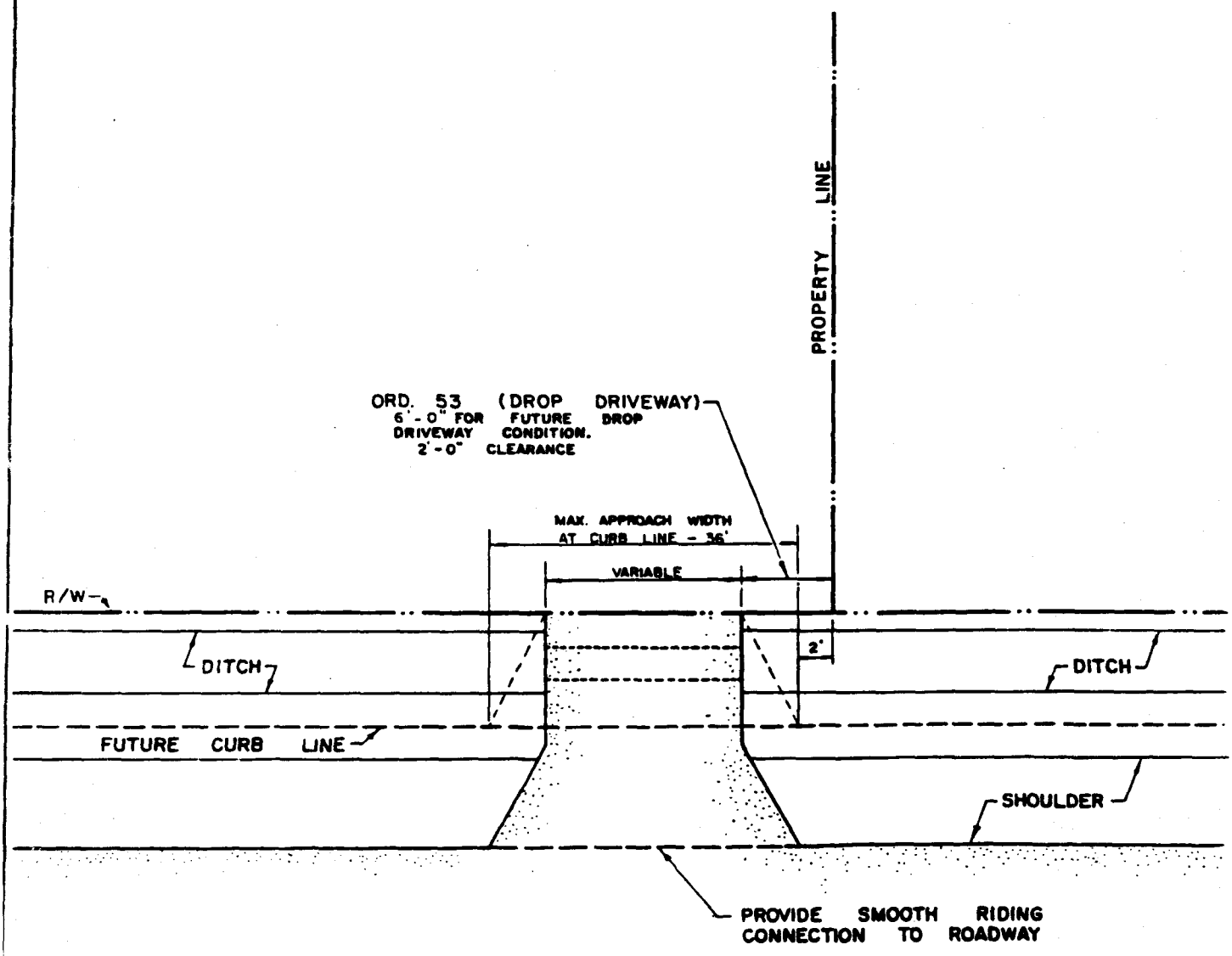

PLAN

D-34	STANDARD DETAILS	DRIVEWAY DRAINAGE - PIPE CULVERT SEPTEMBER 1984 NOT TO SCALE	COUNTY OF HAWAII

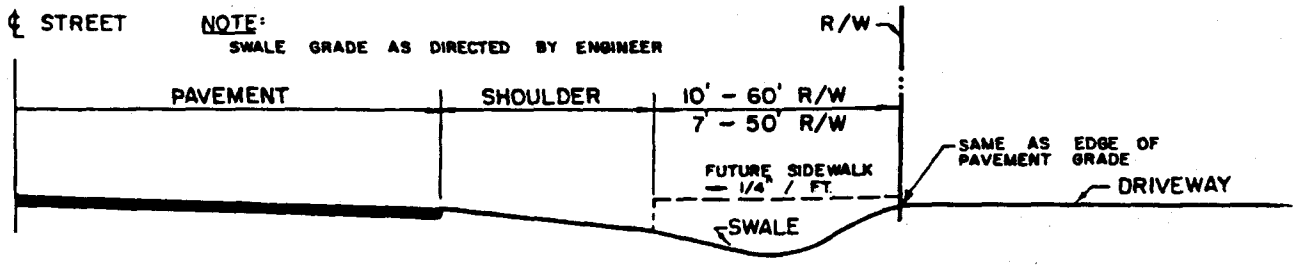

SECTION

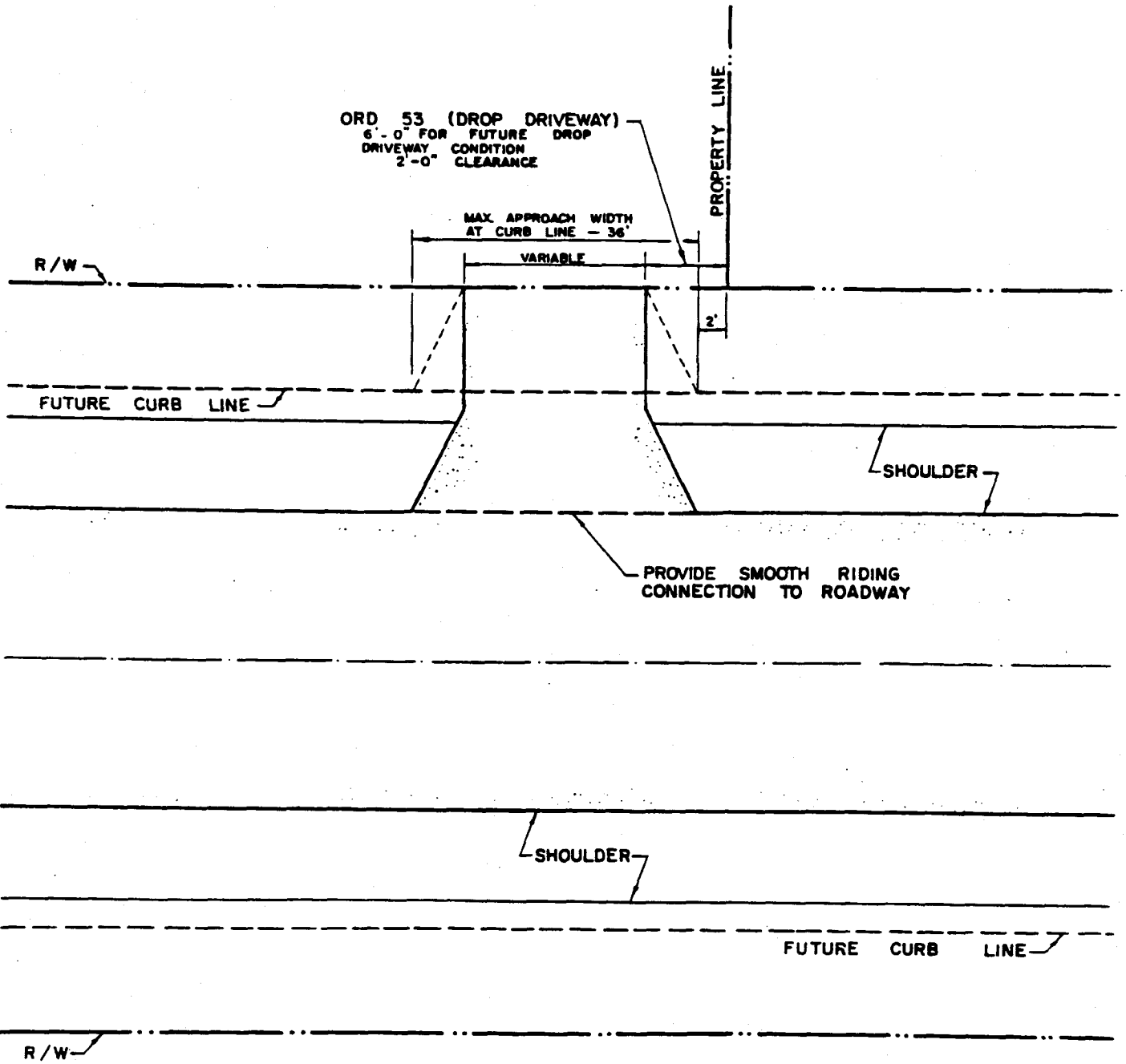

PLAN

COUNTY OF HAWAII	DRIVEWAY DRAINAGE - SWALE NOT TO SCALE SEPTEMBER 1984	STANDARD DETAILS	D-35

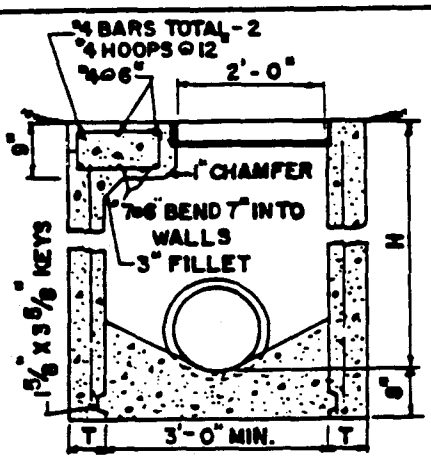

(SHOWING SMALL PIPE)

SECTION B-B

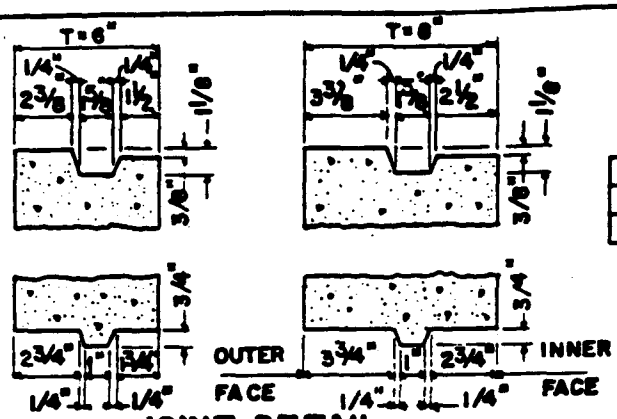

H	T
8'-0" OR LESS	6"
8'-1" TO 20'-0"	8"

JOINT DETAIL

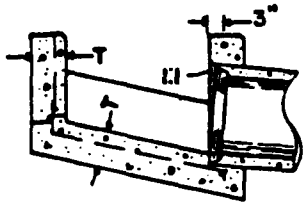

ALTERNATIVE REINFORCED BOTTOM

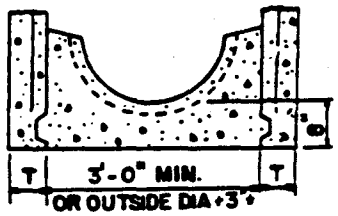

ALTERNATIVE HALF ROUND BOTTOM

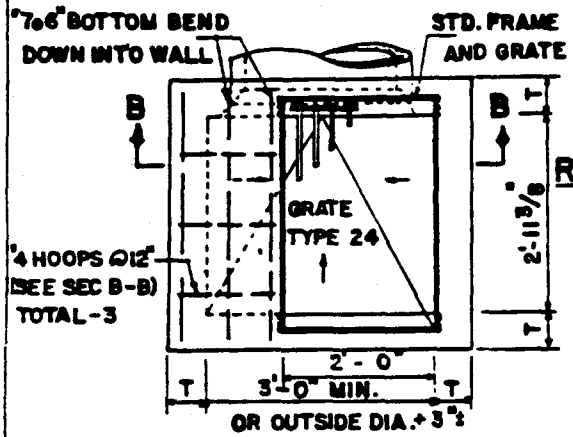

TYPE G2

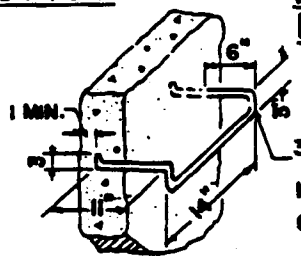

STEP DETAIL

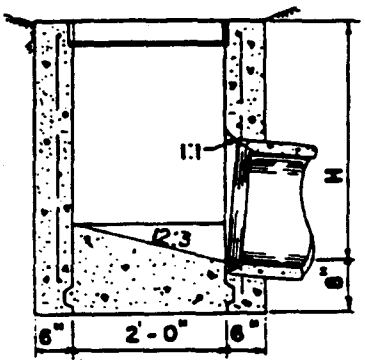

BOTTOMS NOT REINFORCED

SECTION A-A

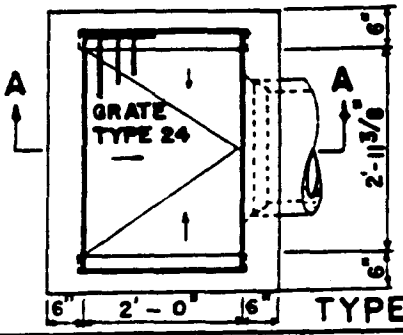

TYPE G1

GENERAL NOTES

1. "H" IS THE DIFF. IN ELEV. BETWEEN THE OUTLET PIPE FLOW LINE AND THE NORMAL GUTTER GRADE LINE UNDERPRESSED AT THE CURB FACE.
2. FOR "T" WALL THICKNESS, SEE TABLE.
3. REINFORCING STEEL IN WALLS SHALL BE #4 BARS @ 18" CENTERS, PLACED 1½" CLEAR TO INSIDE OF BOX UNLESS OTHERWISE SHOWN.
4. STEPS - NONE REQUIRED WHERE "H" IS 3'-6" OR LESS. INSTALL ONE STEP 16"± ABOVE FLOOR WHEN "H" IS MORE THAN 3'-6" AND LESS THAN 5'-0". WHERE "H" IS MORE THAN 5'-0", STEPS SHALL BE EVENLY SPACED @ 12"± INTERVALS FROM 16"± ABOVE FLOOR TO WITHIN 12" OF THE TOP OF THE BOX. PLACE STEPS IN WALL WITHOUT PIPE OPENING.
5. DETAILS SHOWN APPLY TO BOTH METAL AND CONCRETE PIPE.
6. PIPE(S) CAN BE PLACED IN ANY WALL.
7. CURB SECTIONS SHALL MATCH ADJACENT CURB.
8. BASIN FLOORS SHALL HAVE WOOD TROWEL FINISH AND A MINIMUM SLOPE OF 12:3 FROM ALL DIRECTIONS TOWARD OUTLET PIPE.
9. GALVANIZING – SEE STANDARD SPECIFICATIONS OR SPECIAL PROVISIONS.
10. CAST-IN-PLACE OR PRECAST ALTERNATIVE IS OPTIONAL WITH CONTRACTOR.
11. SET INLET SO THAT GRATE BARS ARE PARALLEL TO DIRECTION OF PRINCIPAL SURFACE FLOW.
12. SEE "STANDARD GRATE DETAIL" FOR GRATE AND FRAME DETAILS.
13. USE G1 WHEN H≤4'-0".

D-36	STANDARD DETAILS	TYPE G1 AND TYPE G2 DRAINAGE INLETS SEPTEMBER 1984 NOT TO SCALE	COUNTY OF KAUAI

TABLE A

H	T
8' - 0" OR LESS	6"
8' - 1" TO 20' - 0"	8"

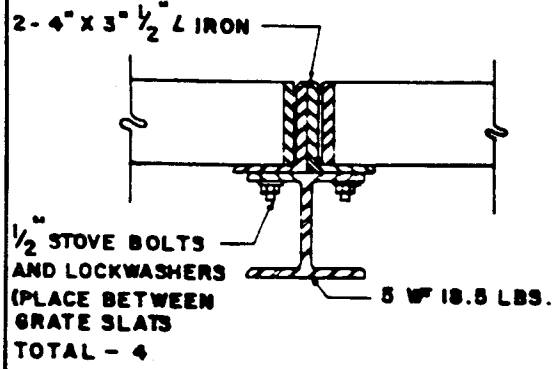

SECTION C-C

GENERAL NOTES

1. "H" IS THE DIFF. IN ELEV. BETWEEN THE OUTLET PIPE FLOW LINE AND THE NORMAL GUTTER GRADE LINE UNDEPRESSED.
2. FOR "T" WALL THICKNESS, SEE TABLE A.
3. REINFORCING STEEL IN WALLS SHALL BE #4 BARS @ 18"± CENTERS PLACED 1½" CLEAR TO INSIDE OF BOX UNLESS OTHERWISE SHOWN.
4. STEPS - NONE REQUIRED WHERE "H" IS 3'-6" OR LESS. INSTALL ONE STEP "H" ABOVE FLOOR WHEN 16"± IS MORE THAN 3'-6" AND LESS THAN 5'-0". WHERE "H" IS MORE THAN 5'-0", STEPS SHALL BE EVENLY SPACED @ 12"± INVERVALS FROM 16"± ABOVE FLOOR TO WITHIN 12"± OF THE TOP OF THE BOX. PLACE STEPS IN WALL WITHOUT PIPE OPENINGS.
5. WHEN SHOWN ON THE PROJECT PLANS, PLACE A #6 PROTECTION BAR HORIZONTALLY ACROSS THE LENGTH OF THE OPENING AND BEND BACK 4" INTO THE INLET WALL ON EACH SIDE.
6. PIPE(S) CAN BE PLACED IN ANY WALL.
7. BASIN FLOORS SHALL HAVE WOOD TROWEL FINISH AND A MINIMUM SLOPE OF 12:1 FROM ALL DIRECTIONS TOWARDS OUTLET PIPE.
8. GALVANIZING - SEE STANDARD SPECIFICATIONS OR SPECIAL PROVISIONS.
9. W=2'-11 3/8" FOR ONE GRATE, ADD 3'-5 3/8" FOR ADDITIONAL GRATES IN TANDEM.
10. FULL PENETRATION BUTT WELDS MAY BE SUBSTITUTED FOR THE FILLET WELDS ON ALL ANCHORS.
11. STANDARD SQUARE, HEXAGON, ROUND OR EQUIVALENT HEADED ANCHORS MAY BE SUBSTITUTED FOR THE RIGHT ANGLE HOOKS ON THE ANCHORS SHOWN ON THIS PLAN.

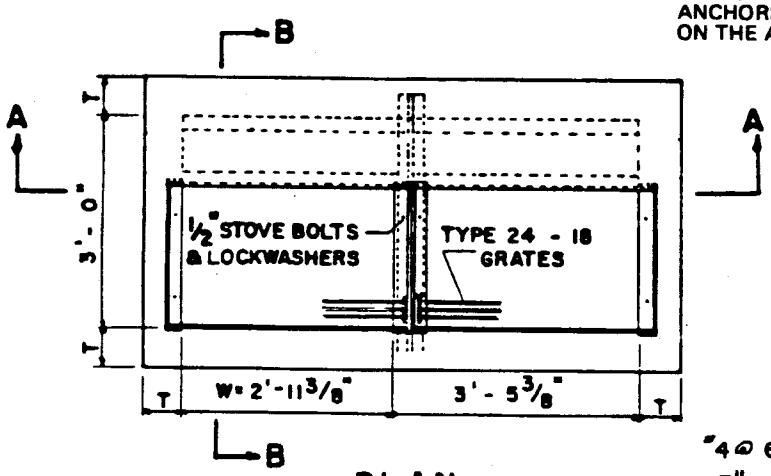

PLAN

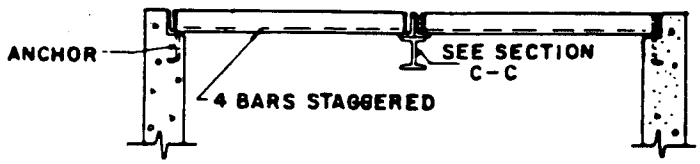

SECTION A-A

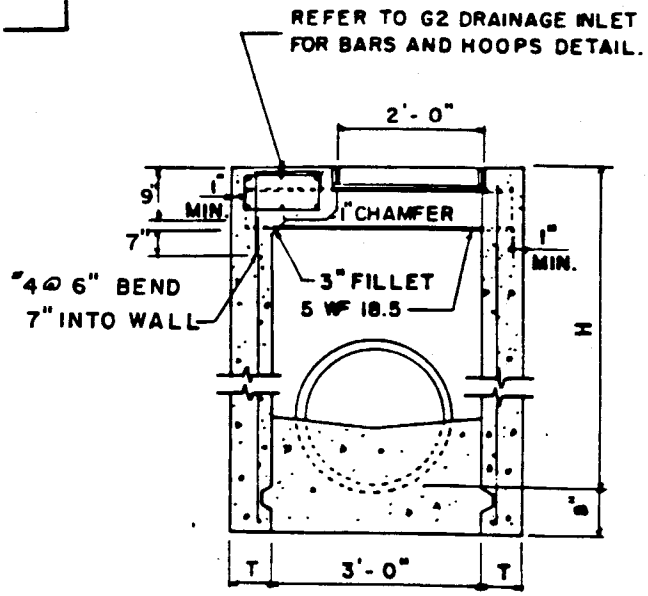

SECTION B-B

COUNTY OF KAUAI	TYPE G3 DRAINAGE INLET SCALE: 3/8" = 1'-0" SEPTEMBER 1984	STANDARD DETAILS	D-37

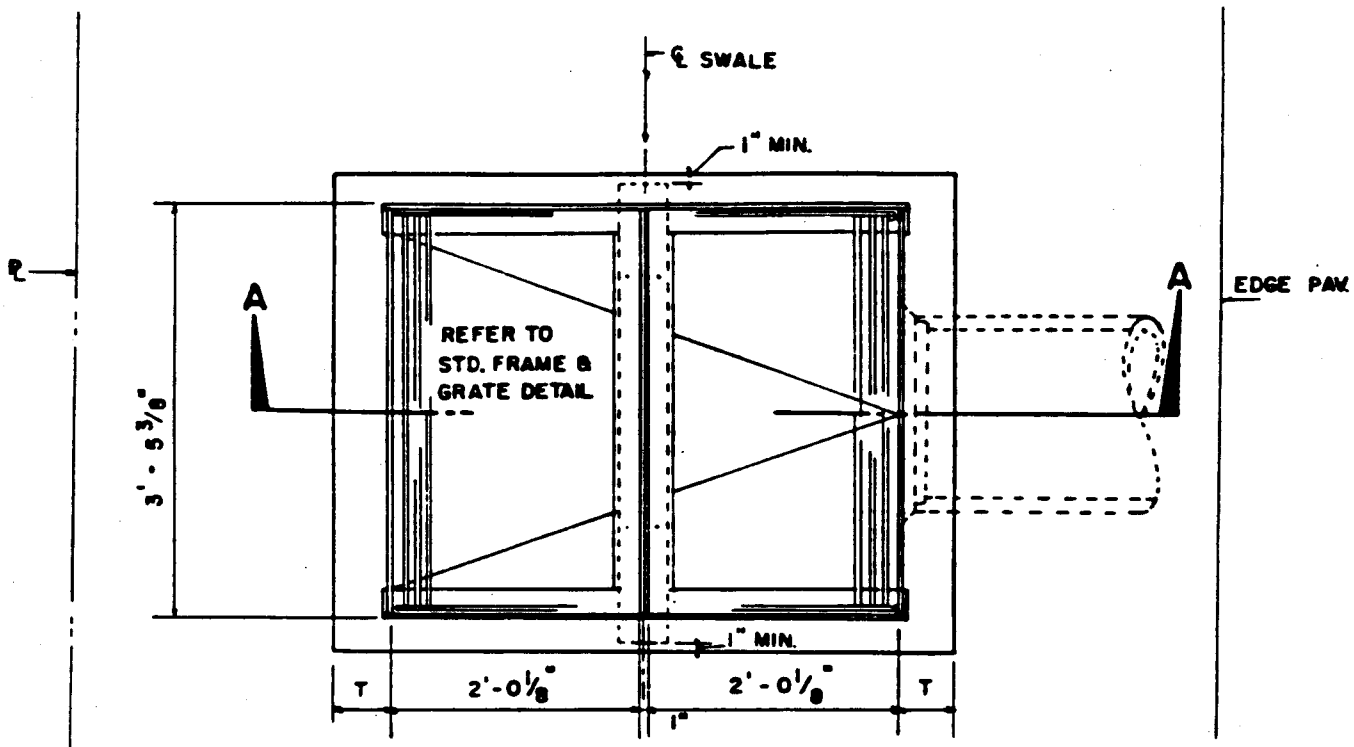

PLAN

REFER TO TYPES G1, G2 & G3 DRAINAGE INLET NOTES, TABLES, SECTIONS & DETAILS

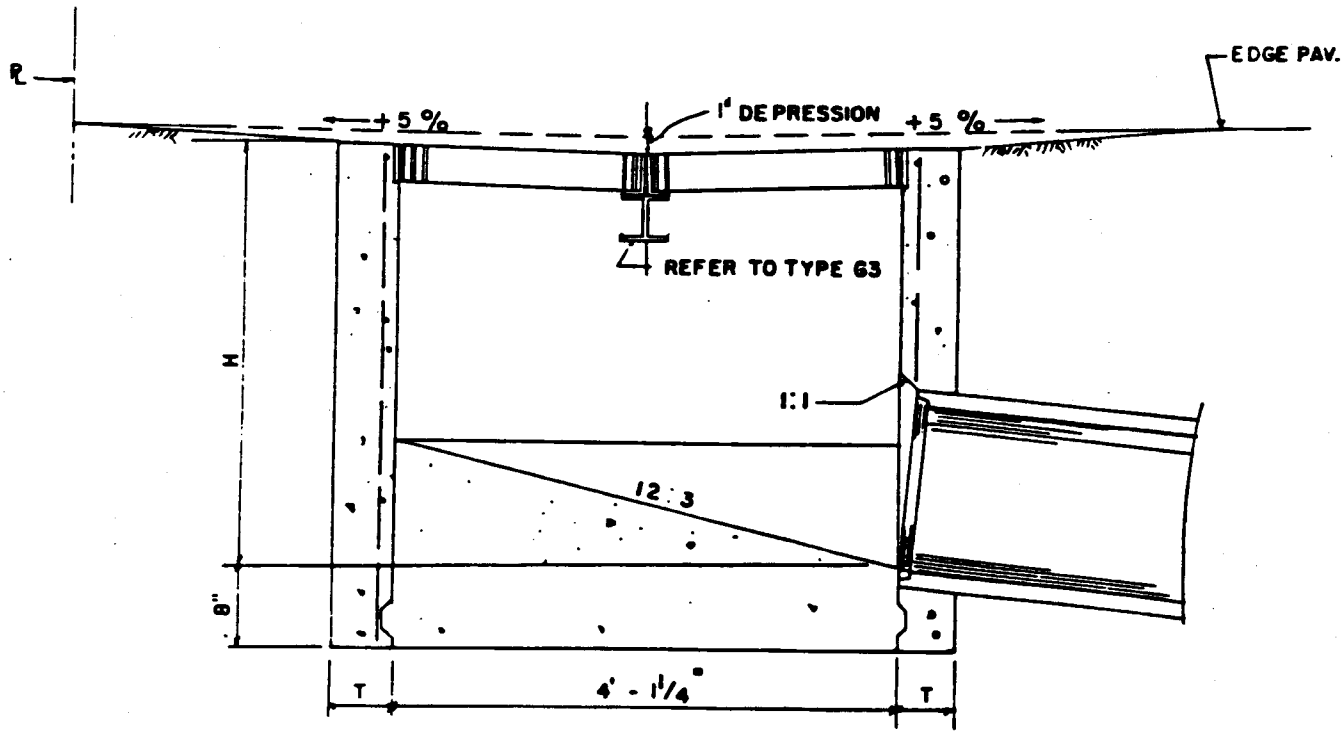

SECTION A-A

D-38	STANDARD DETAILS	TYPE G4 DRAINAGE INLET SEPTEMBER 1984 SCALE: 5/8" = 1'-0"	COUNTY OF KAUAI

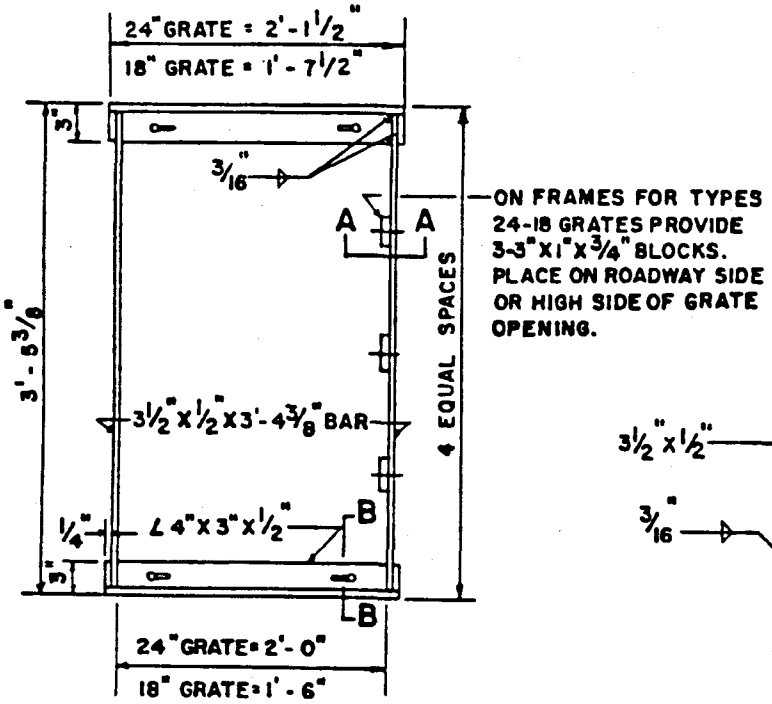

TYPICAL FRAME

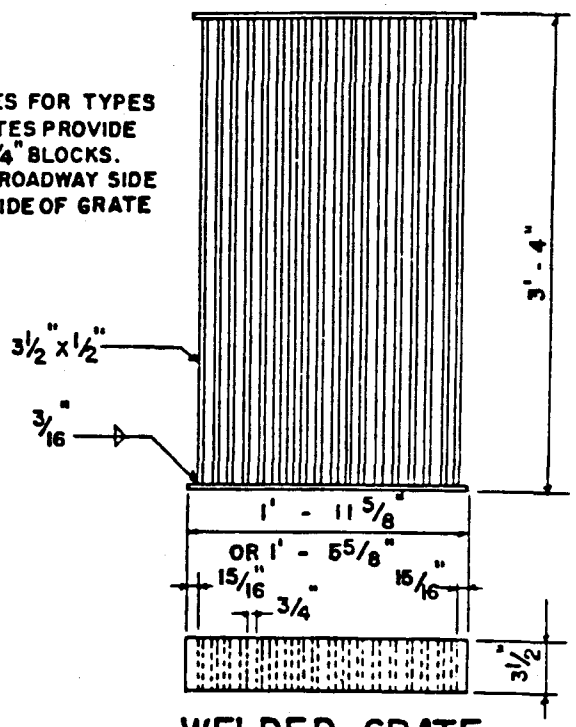

WELDED GRATE

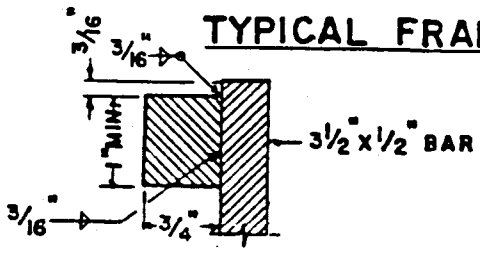

SECTION A-A

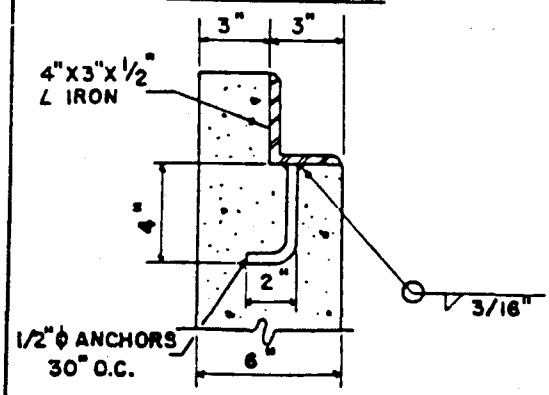

SECTION B-B

GENERAL NOTES

1. CONTRACTOR HAS THE OPTION OF USING CAST NODULAR IRON, CAST STEEL, WELDED, BOLTED, OR CAST END BLOCK GRATE.
2. GRATES AND FRAMES SHALL BE GALVANIZED.
3. ROUNDED TOP OF BARS OPTIONAL ON ALL GRATES.
4. PIPE DROP INLETS WITH A GRATE SHALL BE PLACED SO THAT BARS PARALLEL DIRECTION OF PRINCIPLE SURFACE FLOW.

COUNTY OF KAUAI	STANDARD FRAME AND GRATE NOT TO SCALE SEPTEMBER 1984	STANDARD DETAILS	D-39

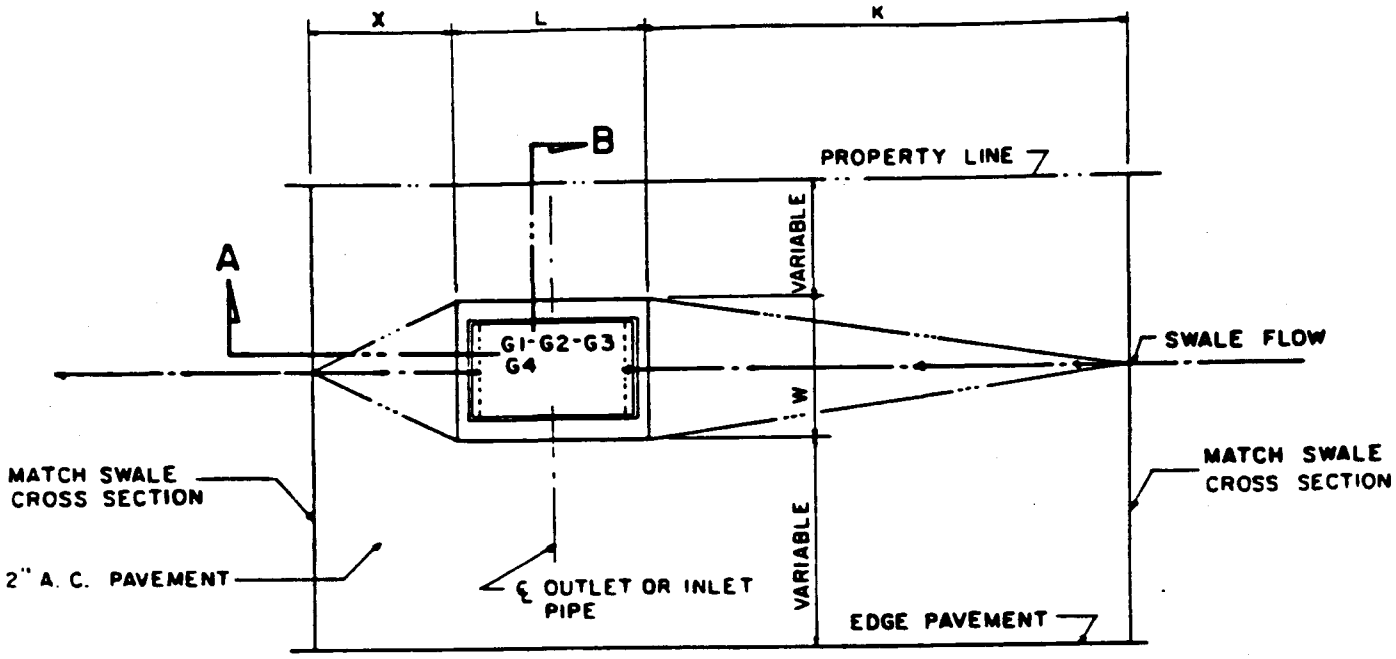

1. W = WIDTH OF CATCH BASIN
2. L = LENGTH OF CATCH BASIN
3. K = 6'-0" MIN. UNLESS OTHERWISE SPECIFIED } NORMAL SECTION
4. X = 3'-0" MIN. UNLESS OTHERWISE SPECIFIED } NORMAL SECTION
5. IN SUMP CONDITIONS K = X = 6'-0" MIN.

PLAN

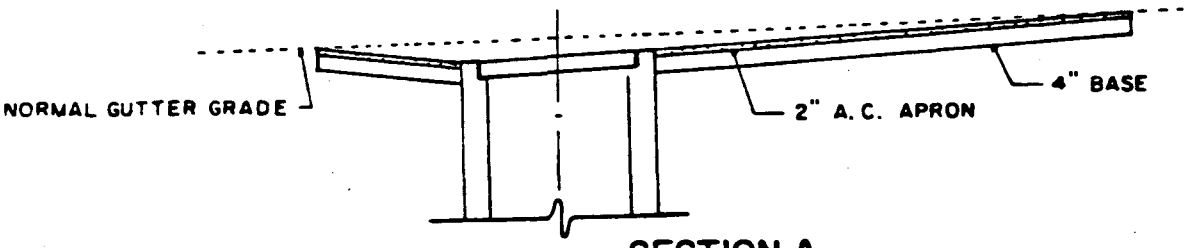

SECTION A

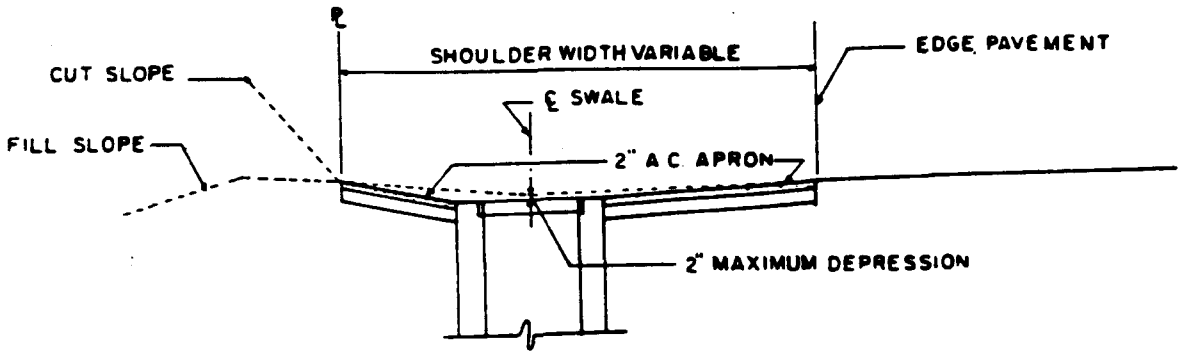

SECTION B

D-40	STANDARD DETAILS	LOCAL DEPRESSION WITHOUT CURB AND GUTTER SEPTEMBER 1984 SCALE: 1/4" = 1'-0"	COUNTY OF KAUAI

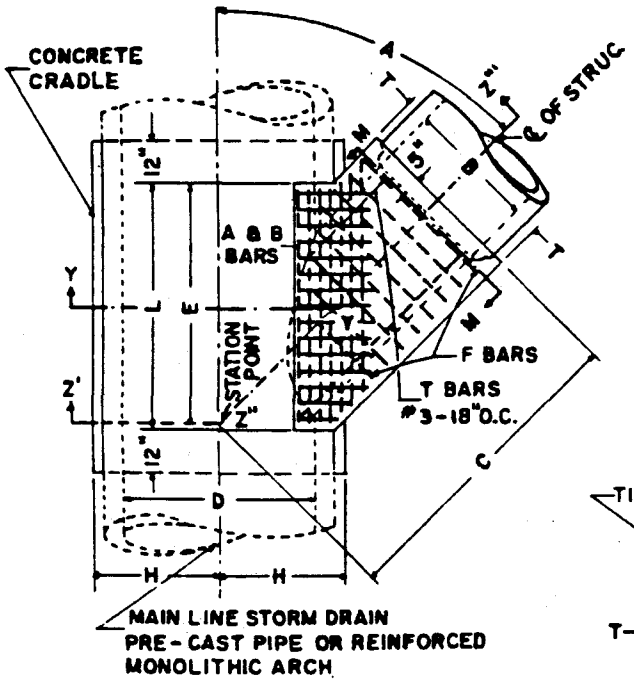

PLAN

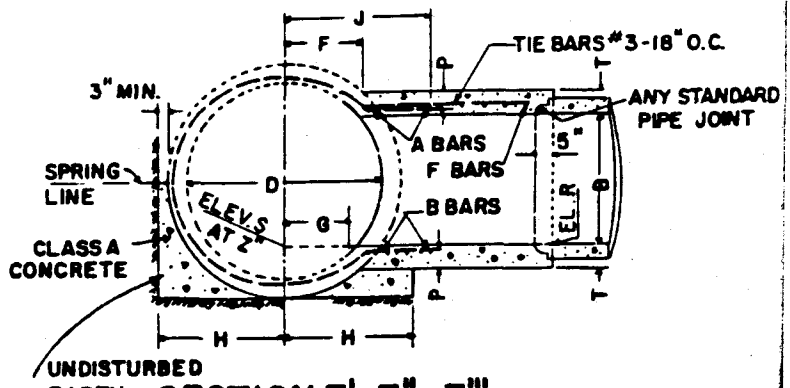

SECTION Z'-Z"-Z'''
PROJECTED ON Y-Y-Z

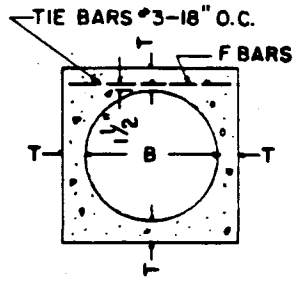

SECTION M-M

TABLE OF VALUES FOR T	
B	T
12"	4"
15"	4 1/4"
18"	4 1/2"
21"	5"
24"	5 1/4"
27"	5 1/2"
30"	6"
33"	6 1/4"
36"	6 1/2"
39"	7"

MINIMUM DEPTH OF TOP AND BOTTOM SLABS SHALL BE $\frac{D}{12}+2"$

NOTES

VALUES FOR A, B, C, D, E, F, G, L, ELEV. R AND ELEV. S SHOWN ON IMPROVEMENT PLAN.

H: PIPE SHALL BE CRADLED IN CLASS A CONCRETE EXTENDING LONGITUDINALLY TO POINT 1 FT. BEYOND THE LIMITS OF L. H = ½ OUTSIDE DIA. OF PIPE +3" AS A MIN. CRADLE MAY BE OMITTED ON SIDE OPPOSITE LATERAL INLET WHEN CONSTRUCTED IN CONNECTION WITH EXISTING PIPE STORM DRAIN.

J: A AND B BARS SHALL BE CARRIED TO POINT NOT LESS THAN J DIST. FROM ℄ = 7D/12+6".

L: RECTANGULAR OPENING IN MAIN LINE PIPE SHALL BE CUT IN WITHIN THESE LIMITS NORMAL TO PIPE SURFACE WITHOUT DAMAGING STEEL. VALUES FOR F, G, AND L ON IMPROVEMENT PLAN.

P: TRANSVERSE REINFORCEMENT IN PIPE SHALL BE CUT IN CENTER OF OPENING AND BENT TO UNIFORM DISTANCE FROM TOP AND BOTTOM OF JUNCTION STRUCTURE.

T: TABLE OF VALUES FOR T SHOWN ON THIS PLAN.

1. OPTIONAL CONSTRUCTION: WHEN JUNCTION STRUCTURE B IS SPECIFIED ON IMPROVEMENT PLAN, THE CONTRACTOR SHALL HAVE THE OPTION OF CONSTRUCTING JUNCTION C, IN WHICH CASE CONSTRUCTION DATA WILL BE FURNISHED BY THE ENGINEER.
2. CONCRETE SHALL BE CLASS A.
3. REINFORCING STEEL SHALL BE ROUND, DEFORMED, STRAIGHT BARS 1½" CLEAR FROM FACE OF CONCRETE UNLESS OTHERWISE SHOWN.
4. STEEL SCHEDULE: A & B BARS – #5 @ 3" O.C.
   F BARS – #4 @ 6" O.C.
5. MONOLITHIC ARCH: WHEN JUNCTION STRUCTURE B IS SPECIFIED WITH REINFORCED MONOLITHIC ARCH STORM DRAIN, VALUE D SHALL REFER TO THE CLEAR SPAN OF ARCH. REINFORCING STEEL SHALL BE CUT AND BENT INTO JUNCTION STRUCTURE THE SAME AS FOR PIPE. CONCRETE CRADLE UNDER REINFORCED MONOLITHIC ARCH IS NOT REQUIRED.
6. FLOOR OF STRUCTURE SHALL BE STEEL-TROWELED TO SPRING LINE.
7. ELEVATION S APPLIES AT CENTER OF MAIN LINE ON PROLOGATION OF INVERT OF SPUR.

COUNTY OF KAUAI COUNTY OF MAUI COUNTY OF HAWAII	JUNCTION STRUCTURE B SCALE: 1/4" = 1'–0" SEPTEMBER 1984	STANDARD DETAILS	D-41

DIAM. B OR D2	A OR B-BARS	C OR F-BARS
12" TO 39"	#5 @ 3"	#4 @ 6"
42" TO 84"	#6 @ 3"	#5 @ 6"

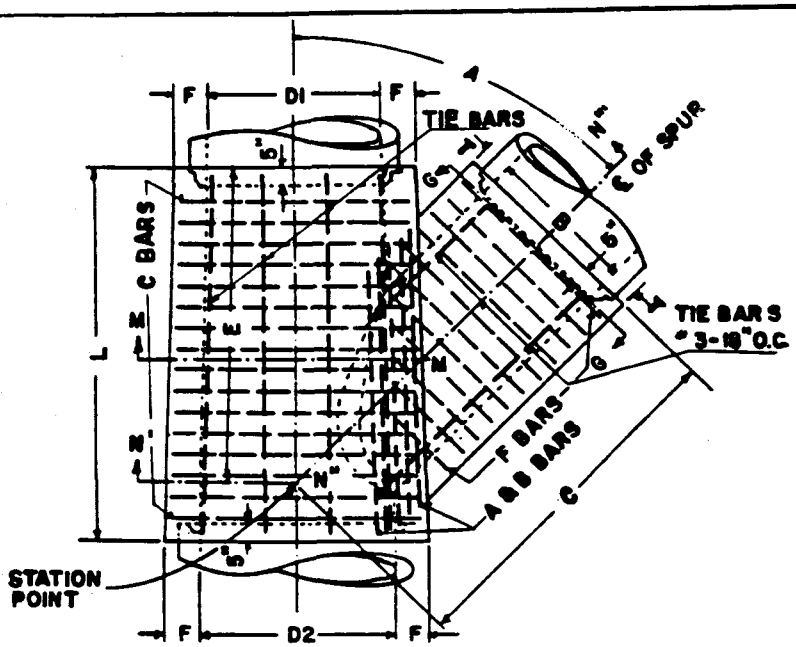

PLAN

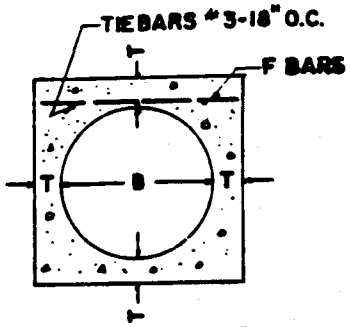

SECTION G-G

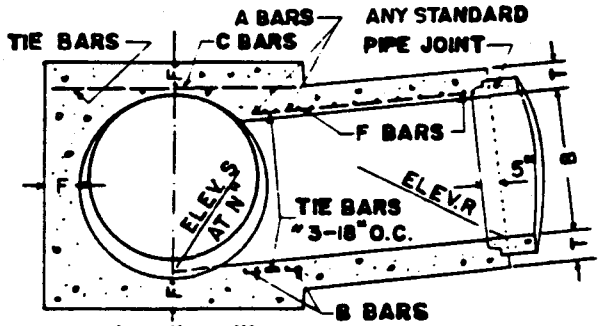

SECTION N'-N"-N'''
PROJECTED ON M-M-N

TABLE OF VALUES FOR F AND T

D2	F
12"	4"
15"	4 1/4"
18"	4 1/2"
21"	5"
24"	5 1/4"
27"	5 1/2"
30"	6"
33"	6 1/4"
36"	6 1/2"
39"	7"
42"	7 1/2"
45"	7 3/4"
48"	8"
51"	8 1/2"
54"	9"
57"	9 1/4"
60"	9 1/2"
63"	10"
66"	10 1/4"
69"	10 3/4"
72"	11"
78"	11 3/4"
84"	12 1/2"
90"	13 1/4"
96"	14"

B	T
12"	4"
15"	4 1/4"
18"	4 1/2"
21"	5"
24"	5 1/4"
27"	5 1/2"
30"	6"
33"	6 1/4"
36"	6 1/2"
39"	7"
42"	7 1/2"
45"	7 3/4"
48"	8"
51"	8 1/2"
54"	9"
57"	9 1/4"
60"	9 1/2"
63"	10"
66"	10 1/4"
69"	10 3/4"
72"	11"

NOTES

1. VALUES FOR A, B, C, D_1, D_2, E, L, ELEV. R AND ELEV. S ARE SHOWN ON IMPROVEMENT PLAN TABLE OF VALUES FOR F AND T SHOWN ON THIS PLAN.
2. OPTIONAL CONSTRUCTION: WHEN JUNCTION STRUCTURE B IS SPECIFIED ON IMPROVEMENT PLAN, THE CONTRACTOR SHALL HAVE THE OPTION OF CONSTRUCTING JUNCTION STRUCTURE C, IN WHICH CASE CONSTRUCTION DATA WILL BE FURNISHED BY THE ENGINEER.
3. CONCRETE SHALL BE CLASS A.
4. FLOOR OF STRUCTURE SHALL BE STEEL-TROWELED TO SPRING LINE.
5. REINFORCING STEEL SHALL BE ROUND, DEFORMED, STRAIGHT BARS, 1½" CLEAR FROM FACE OF CONCRETE UNLESS OTHERWISE SHOWN.
   TIE BARS SHALL BE 3/8" ϕ AND SPACED 18" O.C. OR CLOSER. A AND B BARS NEED NOT BE LONGER THAN THE OUTSIDE DIAGONAL WIDTH OF LATERAL SPUR.
6. STEEL SCHEDULE DETAILED ON IMPROVEMENT PLAN.
7. ELEVATION S APPLIES AT CENTER OF MAIN LINE ON PROLONGATION OF INVERT OF SPUR.
8. JUNCTION STRUCTURE SHALL BE POURED IN ONE CONTINUOUS OPERATION, EXCEPT THAT THE CONTRACTOR SHALL HAVE THE OPTION OF PLACING AT THE SPRING LINE A CONSTRUCTION JOINT WITH A LONGITUDINAL KEYWAY.
9. LENGTH L SHOWN ON IMPROVEMENT PLAN.
10. STATIONS OF MANHOLES SHOWN ON IMPROVEMENT PLAN APPLY AT INTERSECTION OF MAIN LINE AND SPUR. ELEV. SHOWN AT THIS POINT REFER TO PROLONGED INVERT GRADE LINES, EXCEPT THAT WHEN INTERSECTION OF CENTER LINES FALLS OUTSIDE OF STRUCTURE, THE ELEV. ARE SHOWN AND APPLY AT EXTREME LOWER END OF THE STRUCTURE.
11. LATERALS - WHERE LATERALS ENTER ON BOTH SIDES OF STRUCTURE, THEY SHALL BE DESIGNATED ON THE IMPROVEMENT PLAN AS RIGHT OR LEFT, FACING IN THE DIRECTION OF STATIONING.

D-42	STANDARD DETAILS	JUNCTION STRUCTURE C SEPTEMBER 1984 NOT TO SCALE	COUNTY OF KAUAI COUNTY OF MAUI COUNTY OF HAWAII

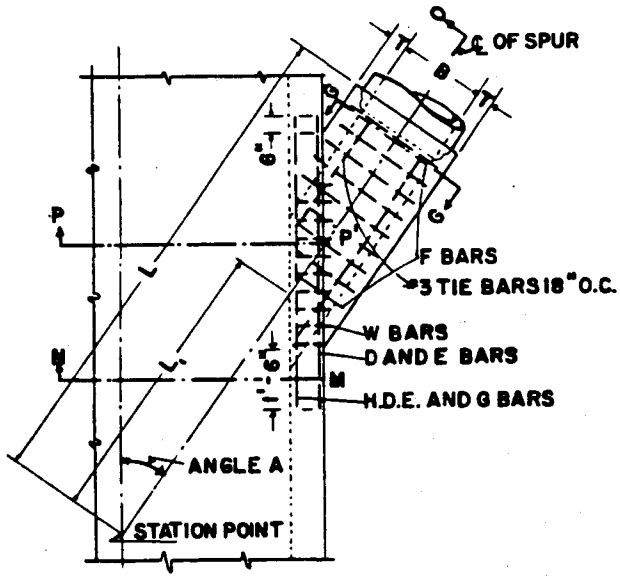

PLAN

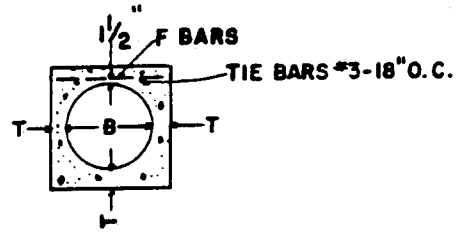

SECTION G-G

TABLE OF VALUES FOR T

B	T
12"	4"
15"	4 1/4"
18"	4 1/2"
21"	5"
24"	5 1/4"
27"	5 1/2"
30"	6"
33"	6 1/4"
36"	6 1/2"
39"	7"
42"	7 1/2"
45"	7 3/4"
48"	8"
51"	8 1/2
54"	9"
57"	9 1/4"
60"	9 1/2"
63"	10"
66"	10 1/4"
69"	10 3/4"
72"	11"

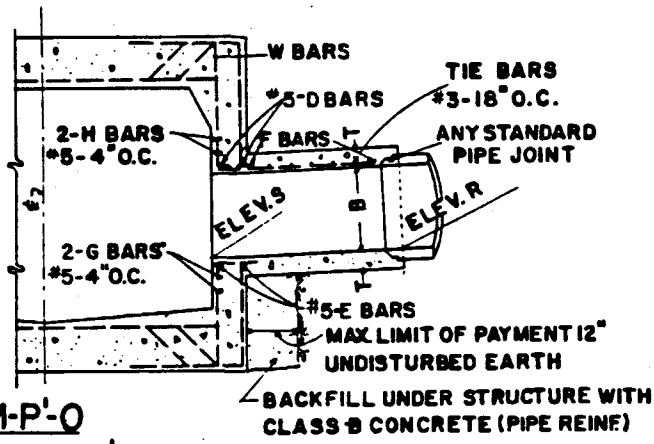

SECTION N-M-P'-O
PROJECTED ON P-P'-O

NOTES

1. VALUES FOR A, B, L, L_1, ELEVATION R AND ELEVATION S ARE SHOWN ON IMPROVEMENT PLAN. TABLE OF VALUES FOR T SHOWN ON THIS PLAN.
2. STATIONS SPECIFIED ON IMPROVEMENT PLAN APPLY AT INTERSECTION OF CENTER LINES OF MAIN LINE AND LATERAL, EXCEPT THAT STATIONS FOR CATCH BASIN CONNECTIONS APPLY AT INSIDE WALL OF STRUCTURE.
3. CONCRETE SHALL BE CLASS A EXCEPT AS OTHERWISE NOTED.
4. REINFORCING STEEL SHALL BE ROUND, DEFORMED, STRAIGHT BARS 1½" CLEAR FROM FACE OF CONCRETE UNLESS OTHERWISE SHOWN.
   W BARS ARE OF SIZE AND SPACING SPECIFIED FOR WALL STEEL ON IMPROVEMENT PLAN, AND SHALL BE CUT IN CENTER OF OPENING AND BENT INTO TOP AND BOTTOM OF JUNCTION STRUCTURE.
   OMIT H BARS WHEN SOFFIT OF SPUR IS 1 FT. OR LESS BELOW SOFFIT OF MAIN LINE, AND OMIT G BARS WHEN INVERT OF SPUR IS 1 FT. OR LESS ABOVE FLOOR OF MAIN LINE.
   OMIT ALL STEEL EXCEPT F BARS AND TIE BARS WHEN JUNCTION STRUCTURE IS SPECIFIED WITH MANHOLE, UNLESS OTHERWISE SHOWN ON IMPROVEMENT PLAN.
   STEEL SCHEDULE DETAILED ON IMPROVEMENT PLAN.
5. JUNCTION STRUCTURE SHALL BE POURED MONOLITHIC WITH MAIN LINE STORM DRAIN OR MANHOLE.
6. FLOOR OF STRUCTURE SHALL BE STEEL-TROWELED TO SPRING LINE.

COUNTY OF KAUAI COUNTY OF MAUI COUNTY OF HAWAII	JUNCTION STRUCTURE D NOT TO SCALE SEPTEMBER 1984	STANDARD DETAILS	D-43

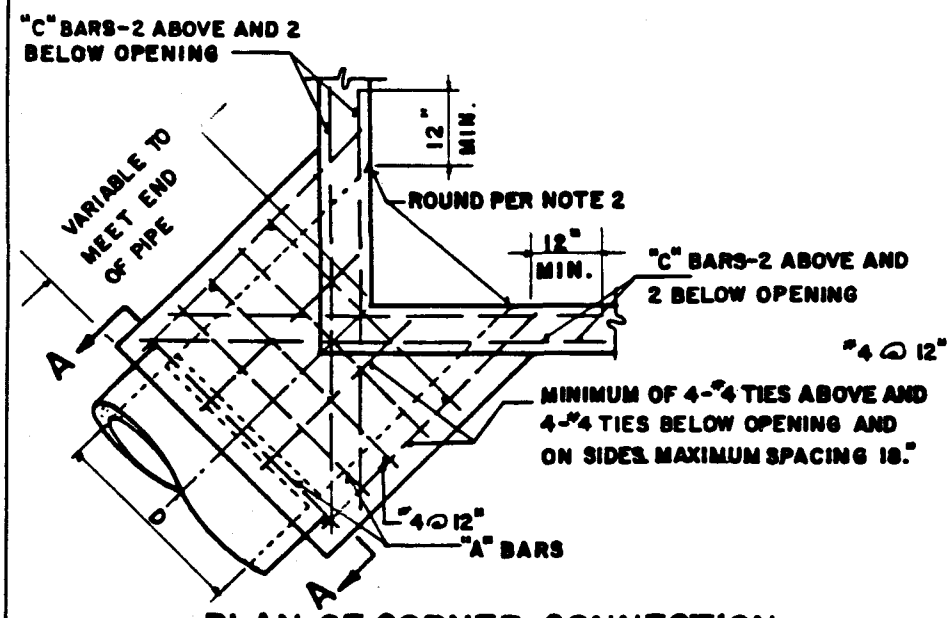

PLAN OF CORNER CONNECTION

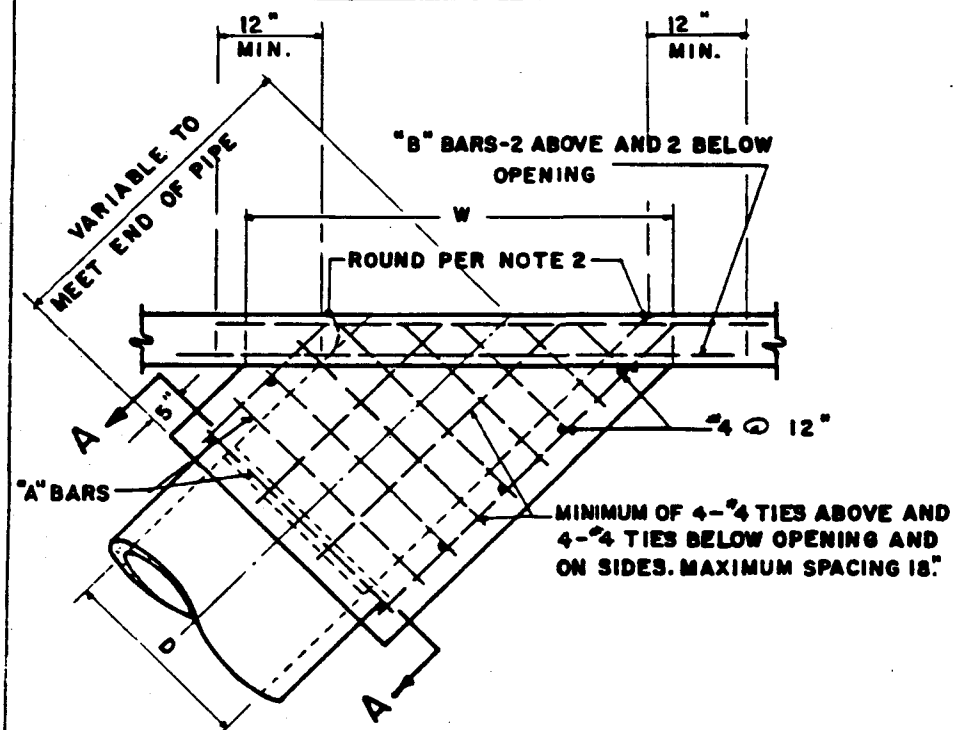

PLAN OF SIDE CONNECTION

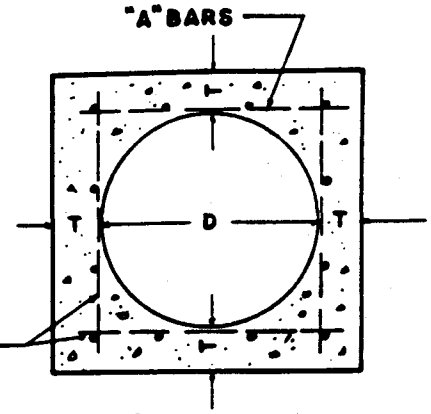

SECTION A-A

D	T	"A"	"B"-"C"
12"	4-1/2"	#4 @ 6"	#5
15"	4-1/2"		
18"	5"		
21"	5-1/2"		
24"	6"		
27"	6-1/2"		
30"	7"		
33"	7"		
36"	7-1/2"		
39"	8"		
42"	8"		
45"	8"	#5 @ 6"	#6
48"	8"		
51"	8"		
54"	8"		
57"	10"		
60"	10"		
63"	10"		
66"	11"		
69"	11"		
72"	11"		

NOTES

1. ROUND EDGE OF OUTLET 3" RADIUS.
2. REINFORCEMENT SHALL BE 1½" INCHES CLEAR FROM THE FACE OF CONCRETE.
3. IN CONNECTING TO AN EXISTING STRUCTURE BREAK OUT PORTIONS OF THE EXISTING STRUCTURE 6 INCHES OUTSIDE ITS INTERSECTION WITH THE NEW CONNECTION. BEND ENDS OF #4 BARS OVER CONNECTION OPENING AS REQUIRED.

D-44	STANDARD DETAILS	MONOLITHIC CATCH BASIN CONNECTION FOR PIPES 12" TO 72" SEPTEMBER 1984 NOT TO SCALE	COUNTY OF KAUAI COUNTY OF MAUI COUNTY OF HAWAII

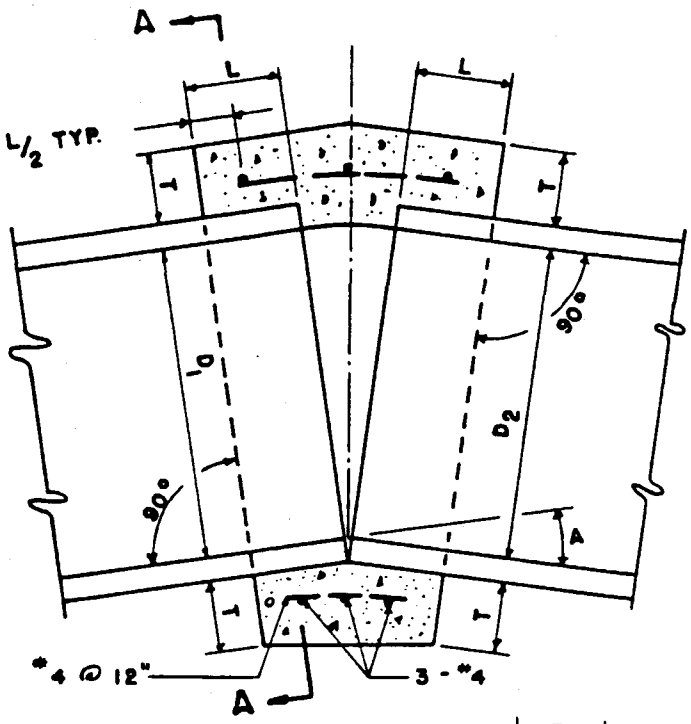

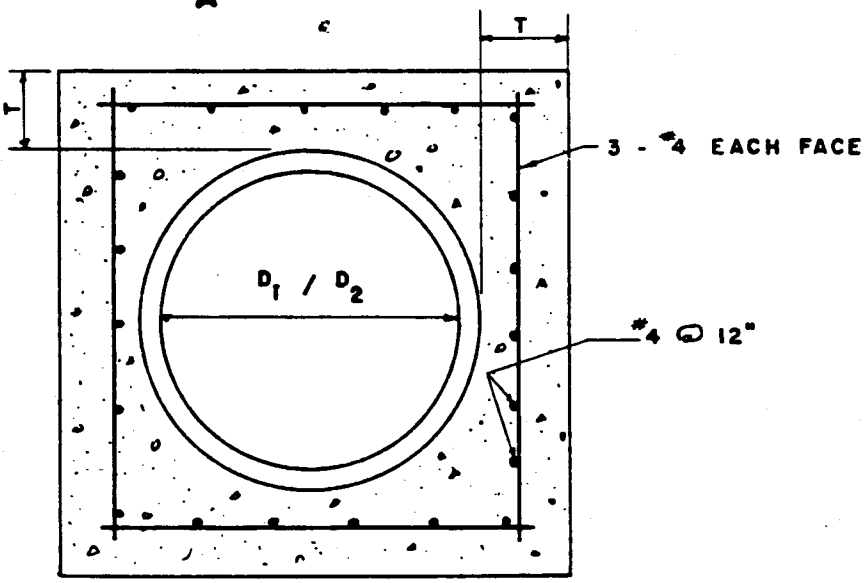

SECTION A-A

D	L	T
12"	1.0'	4"
18"	1.0'	5"
24"	1.0'	6"
36"	1.5'	8"
48"	1.5'	10"
54"	1.5'	10"
60"	1.75'	11"
66"	1.75'	11"
72"	2.0'	12"

NOTES

1. WHERE PIPES OF DIFFERENT DIAMETERS ARE JOINED WITH A CONCRETE COLLAR, L AND T SHALL BE THOSE OF THE LARGER PIPE $D = D_1$ OR D_2 WHICHEVER IS GREATER.
2. FOR PIPES SIZE NOT LISTED USE NEXT LARGER SIZE.
3. OMIT REINFORCING ON PIPES 24" AND LESS IN DIAMETER AND ON ALL PIPES WHERE ANGLE A IS LESS THAN 10°.
4. JOIN PIPES AT INVERTS.
5. REINFORCEMENT SHALL BE PLACED 1½" CLEAR FROM OUTSIDE DIAMETER OF PIPE.

COUNTY OF KAUAI COUNTY OF MAUI COUNTY OF HAWAII	CONCRETE COLLAR DETAILS NOT TO SCALE SEPTEMBER 1984	STANDARD DETAILS	D-45

SPAN	2'	2'	3'	3'	4'	4'	4'	5'	5'	5'	5'
HEIGHT	1'6"	2'	2'	3'	2'	3'	4'	2'	3'	4'	5'
Area A	3	4	6	9	8	12	16	10	15	20	25
Hydraulic Radius R	.43	.50	.60	.75	.67	.86	1.00	.71	.94	1.11	1.25
Neutral Slope S_n	.63	.91	.73	.82	.84	.70	.77	.59	.62	.67	.73
Head Factor	1.30	1.07	.65	.89	.79	.83	.49	.69	.49	.39	.34
Entrance Capacity Q_e	11	17	26	46	45	64	99	43	80	123	178
Design Discharge Q_d	10	20	43	79	90	107	183	71	132	203	288

Note

For boxes of height less than that shown in table, use next greater table height slabs, wall dimensions and reinforcing steel, and make necessary changes in bar lengths, number of spacers and quantities.

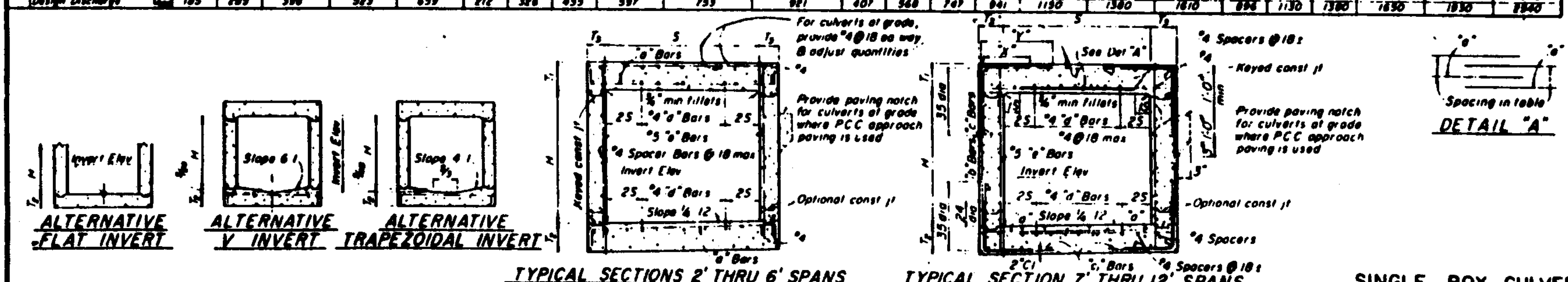

SINGLE BOX CULVERTS

D-46

STANDARD DETAILS

SINGLE BOX CULVERTS

SEPTEMBER 1984

NOT TO SCALE

COUNTY OF KAUAI
COUNTY OF MAUI
COUNTY OF HAWAII

DOUBLE BOX CULVERTS

SPAN	4'	4'	4'	5'	5'	5'	5'	6'	6'	6'	6'	8'	8'	8'	8'	8'
HEIGHT	2'	3'	4'	2'	3'	4'	5'	3'	4'	5'	6'	4'	5'	6'	7'	8'
Strength Classification / Max. Fill over Top	[illegible]	[illegible]	[illegible]	[illegible]	[illegible]	[illegible]	[illegible]	[illegible]	[illegible]	[illegible]	[illegible]	[illegible]	[illegible]	[illegible]	[illegible]	[illegible]
Conc. Top Slab / Bottom Slab / Sidewalls	[illegible]	[illegible]	[illegible]	[illegible]	[illegible]	[illegible]	[illegible]	[illegible]	[illegible]	[illegible]	[illegible]	[illegible]	[illegible]	[illegible]	[illegible]	[illegible]
Reinforcing Steel (Size Bar, Spacing, Length)	[illegible]	[illegible]	[illegible]	[illegible]	[illegible]	[illegible]	[illegible]	[illegible]	[illegible]	[illegible]	[illegible]	[illegible]	[illegible]	[illegible]	[illegible]	[illegible]
"d" Dist Bars (Top Slab Tot No., Bottom Slab Tot No.)	[illegible]	[illegible]	[illegible]	[illegible]	[illegible]	[illegible]	[illegible]	[illegible]	[illegible]	[illegible]	[illegible]	[illegible]	[illegible]	[illegible]	[illegible]	[illegible]
"e" Bars (Size Bar, Spacing)	[illegible]	[illegible]	[illegible]	[illegible]	[illegible]	[illegible]	[illegible]	[illegible]	[illegible]	[illegible]	[illegible]	[illegible]	[illegible]	[illegible]	[illegible]	[illegible]
Spacers Number	23	26	29	23	26	29	32	30	33	36	39	[illegible]	[illegible]	[illegible]	[illegible]	[illegible]
Quant. Concrete C.Y. per lin ft / Reinf. Lbs per lin ft	[illegible]	[illegible]	[illegible]	[illegible]	[illegible]	[illegible]	[illegible]	[illegible]	[illegible]	[illegible]	[illegible]	[illegible]	[illegible]	[illegible]	[illegible]	[illegible]
Hydraulics Area A	16	24	32	20	30	40	50	36	48	60	72	64	80	96	112	128
Hydraulic Radius R	0.67	0.86	1.00	0.71	0.94	1.11	1.25	1.00	1.20	1.33	1.50	1.33	1.54	1.71	1.87	2.00
Neutral Slope S	0.64	0.70	0.77	0.50	0.62	0.67	0.73	0.56	0.59	0.62	0.66	0.52	0.56	0.58	0.59	0.62
Head Factor k	0.75	0.38	0.43	[illegible]	[illegible]	0.39	0.36	0.486	0.334	0.302	0.271	0.314	0.262	0.220	0.200	0.183
Entrance Capacity Q_E	70	128	196	86	160	246	344	156	290	410	544	384	532	724	914	1118
Design Discharge Q_{des}	116	214	328	140	264	404	560	318	480	682	896	[illegible]	910	1194	1506	1842

SPAN	10'	10'	10'	10'	10'	12'	12'	12'	12'	12'	12'
HEIGHT	5'	6'	7'	8'	10'	6'	7'	8'	9'	10'	12'
Strength Classification / Max. Fill over Top	[illegible]	[illegible]	[illegible]	[illegible]	[illegible]	[illegible]	[illegible]	[illegible]	[illegible]	[illegible]	[illegible]
Conc. Top Slab / Bottom Slab / Sidewalls	[illegible]	[illegible]	[illegible]	[illegible]	[illegible]	[illegible]	[illegible]	[illegible]	[illegible]	[illegible]	[illegible]
Reinforcing Steel (Size Bar, Spacing, Length)	[illegible]	[illegible]	[illegible]	[illegible]	[illegible]	[illegible]	[illegible]	[illegible]	[illegible]	[illegible]	[illegible]
"d" Dist Bars (Top Slab Tot No., Bottom Slab Tot No.)	[illegible]	[illegible]	[illegible]	[illegible]	[illegible]	[illegible]	[illegible]	[illegible]	[illegible]	[illegible]	[illegible]
"e" Bars (Size Bar, Spacing)	[illegible]	[illegible]	[illegible]	[illegible]	[illegible]	[illegible]	[illegible]	[illegible]	[illegible]	[illegible]	[illegible]
Spacers Number	45	48	51	54	60	52	55	58	61	64	70
Quant. Concrete C.Y. per lin ft / Reinf. Lbs per lin ft	[illegible]	[illegible]	[illegible]	[illegible]	[illegible]	[illegible]	[illegible]	[illegible]	[illegible]	[illegible]	[illegible]
Hydraulics Area A	100	120	140	160	200	144	168	192	216	240	288
Hydraulic Radius R	1.67	1.88	2.06	2.22	2.50	2.00	2.21	2.40	2.57	2.73	3.00
Neutral Slope S	0.49	0.51	0.52	0.54	0.58	0.46	0.48	0.49	0.51	0.52	0.56
Head Factor k	0.238	0.208	0.183	0.183	0.125	0.189	0.167	0.151	0.138	0.128	0.110
Entrance Capacity Q_E	690	906	1162	1396	1952	1060	1372	1678	2000	2340	3060
Design Discharge Q_{des}	1130	1484	1800	2300	3220	1760	2260	2760	3300	3860	5060

For culverts at grade, extend "c" bars full length, top slab only, provide additional spacers @18 and adjust quantities

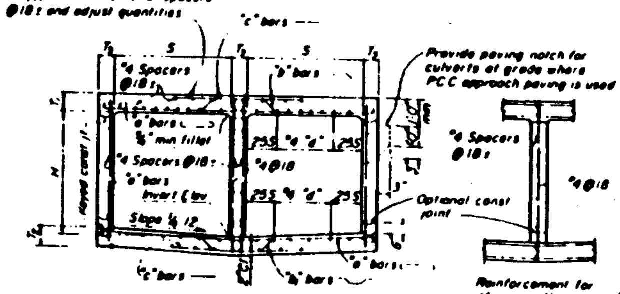

TYPICAL SECTION

(Showing reinforcement for interior walls 8" and over)

DOUBLE BOX CULVERTS

COUNTY OF KAUAI COUNTY OF MAUI COUNTY OF HAWAII	DOUBLE BOX CULVERTS NOT TO SCALE SEPTEMBER 1984	STANDARD DETAILS	D-47

D-48

STANDARD DETAILS

TRIPLE BOX CULVERTS

SEPTEMBER 1984

NOT TO SCALE

COUNTY OF KAUAI
COUNTY OF MAUI
COUNTY OF HAWAII

SPAN	4'						5'						6'						8'					
HEIGHT	2'			3'			2'			3'			3'			4'			4'			5'		
STRENGTH CLASSIFICATION / MAX FILL OVER TOP	A	B	C	A	B	C	A	B	C	A	B	C	A	B	C	A	B	C	A	B	C	A	B	C
Top Slab																								
Bottom Slab																								
Sidewalls																								
Bars																								
Spacing																								
Length																								
Bars																								
Spacing																								
Length																								
Bars																								
Spacing																								
Length																								
Top Slab																								
Bottom Slab																								
Bars																								
Bars																								
Concrete C.Y.																								
Steel Lbs.																								
Area																								
Hydraulic Radius																								
Hydraulic Slope																								
Flow Factor																								
Entrance Capacity																								
Design Discharge																								

SPAN	10'										12'											
HEIGHT	5'			6'			7'			8'			6'			7'			8'			9'		
STRENGTH CLASSIFICATION / MAX FILL OVER TOP	A	B	C	A	B	C	A	B	C	A	B	C	A	B	C	A	B	C	A	B	C	A	B	C
Top Slab																								
Bottom Slab																								
Sidewalls																								
Bars																								
Spacing																								
Length																								
Bars																								
Spacing																								
Length																								
Bars																								
Spacing																								
Length																								
Top Slab																								
Bottom Slab																								
Bars																								
Bars																								
Concrete C.Y.																								
Steel Lbs.																								
Area																								
Hydraulic Radius																								
Hydraulic Slope																								
Flow Factor																								
Entrance Capacity																								
Design Discharge																								

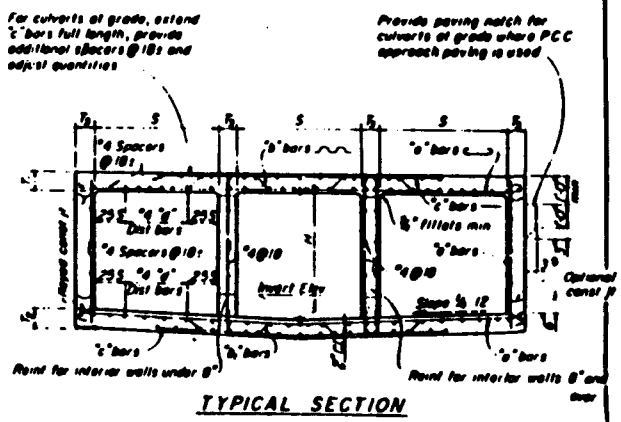

TYPICAL SECTION

TRIPLE BOX CULVERTS

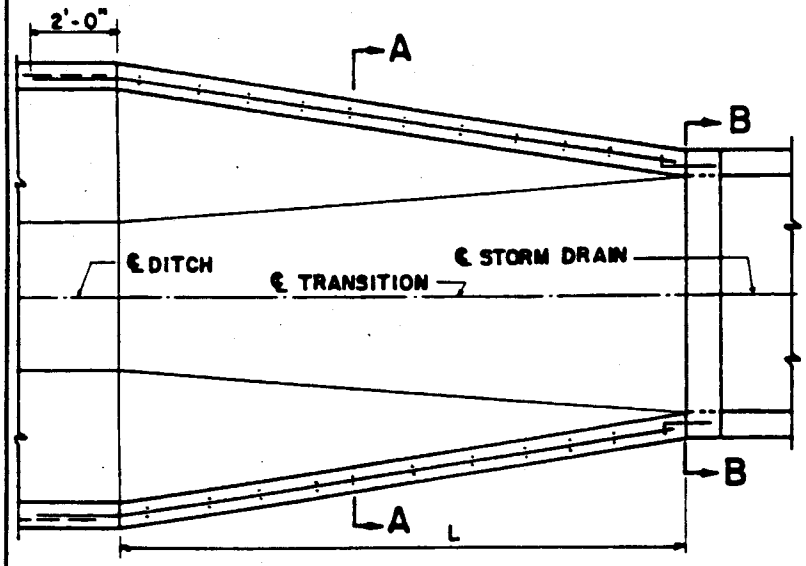

PLAN

TRANSITION TO RECTANGULAR STORM DRAIN

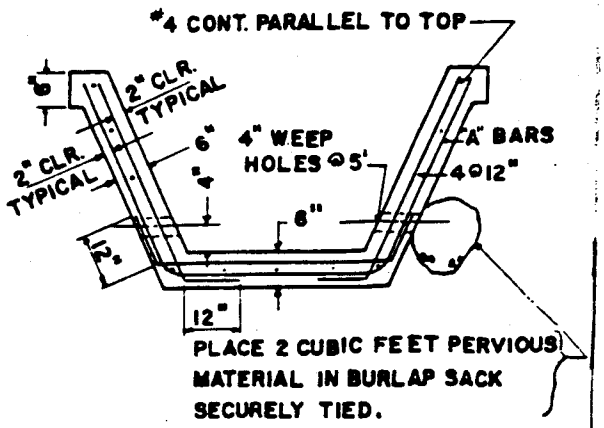

SECTION A-A

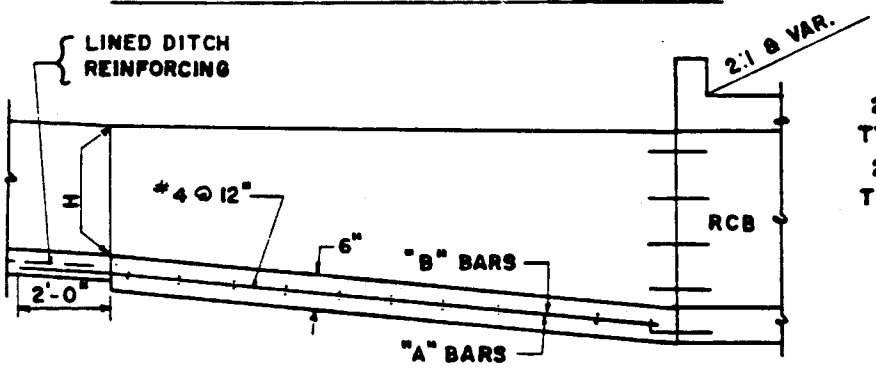

PROFILE

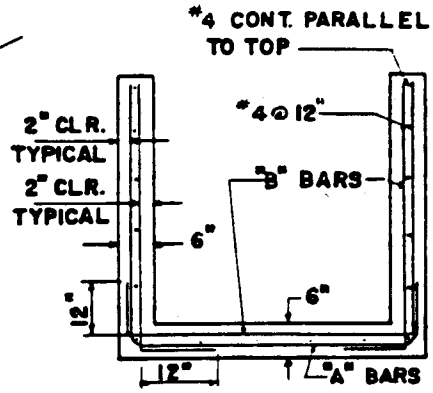

SECTION B-B

H	TRANSITION REINFORCEMENT	H.W. REINFORCEMENT
0'-4"	#4 @ 12" BOTH WAYS CENTERED	#4 @ 18"
OVER 4'-6"	"A" BARS #5 @ 24" "B" BARS #5 @ 24"	#4 @ 18"
OVER 6'-6"	"A" BARS #5 @ 12" "B" BARS #5 @ 12"	#5 @ 12"

NOTES

1. PROVIDE A CONSTRUCTION JOINT BETWEEN THE TRANSITION AND THE STORM DRAIN.
2. EXTEND THE LONGITUDINAL REINFORCING STEEL OF THE TRANSITION 2' INTO THE CHANNEL.
3. IN LIEU OF PLACING THE DOWELS BETWEEN THE TRANSITION AND THE RECTANGULAR STORM DRAIN THE LONGITUDINAL REINFORCING STEEL OF THE STORM DRAIN MAY BE EXTENDED 2' INTO THE TRANSITION STUCTURE.

COUNTY OF KAUAI COUNTY OF MAUI COUNTY OF HAWAII	RECTANGULAR TRANSITION SCALE: 1/4" = 1'-0" SEPTEMBER 1984	STANDARD DETAILS	D-49

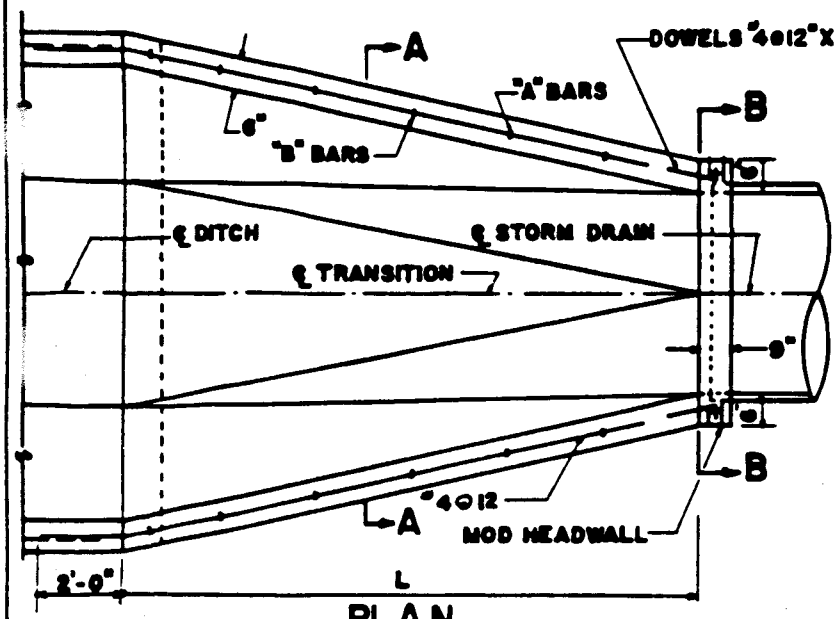

PLAN

TRANSITION TO CIRCULAR STORM DRAIN

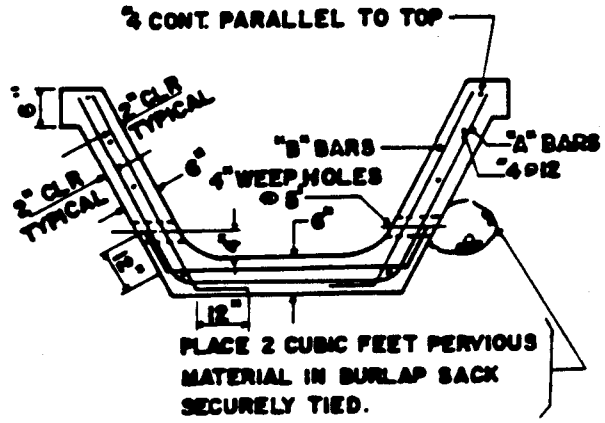

SECTION A-A

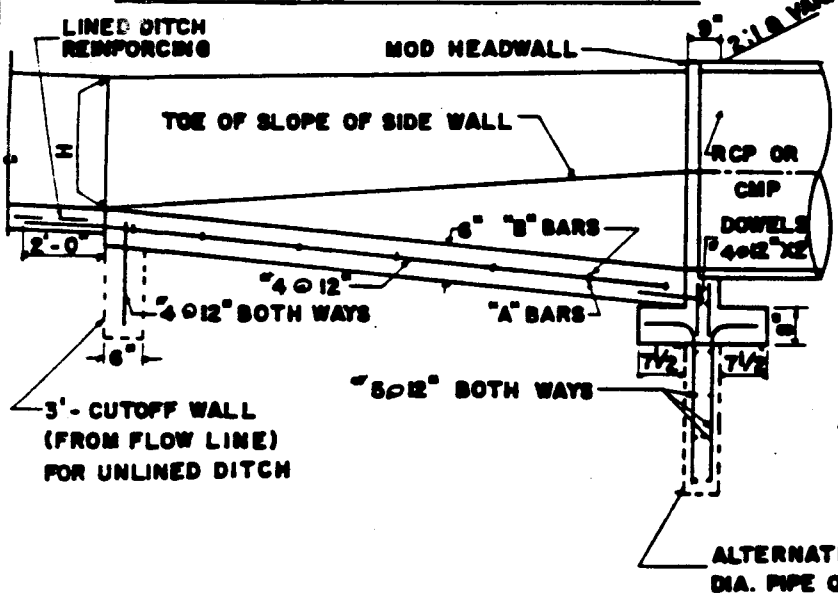

PROFILE

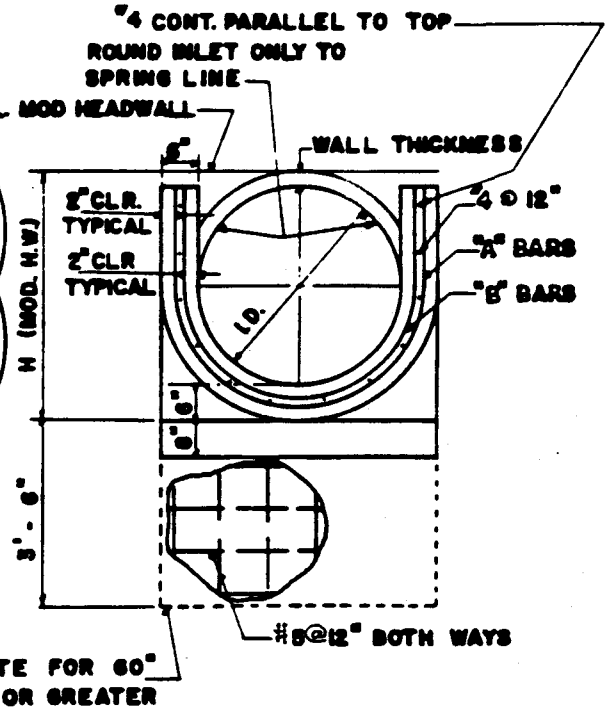

SECTION B-B

NOTE

SEE RECTANGULAR TRANSITION FOR GENERAL NOTES & STEEL TABLE

D-50	STANDARD DETAILS	CIRCULAR TRANSITION SEPTEMBER 1984 NOT TO SCALE	COUNTY OF KAUAI COUNTY OF MAUI COUNTY OF HAWAII

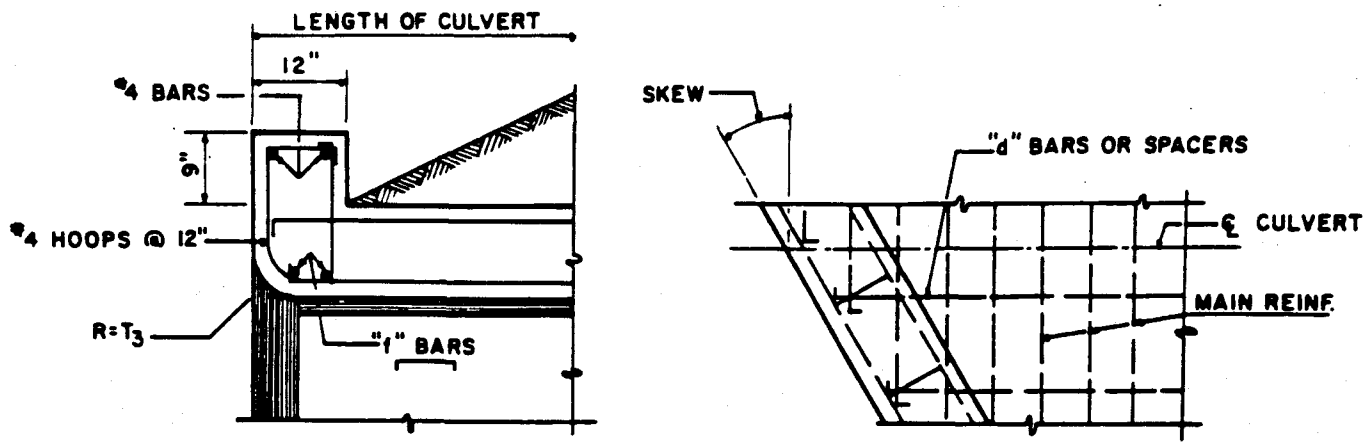

PARTIAL SECTION

PARTIAL PLAN - SKEWED

PARAPET DETAILS FOR SINGLE SPAN CULVERTS

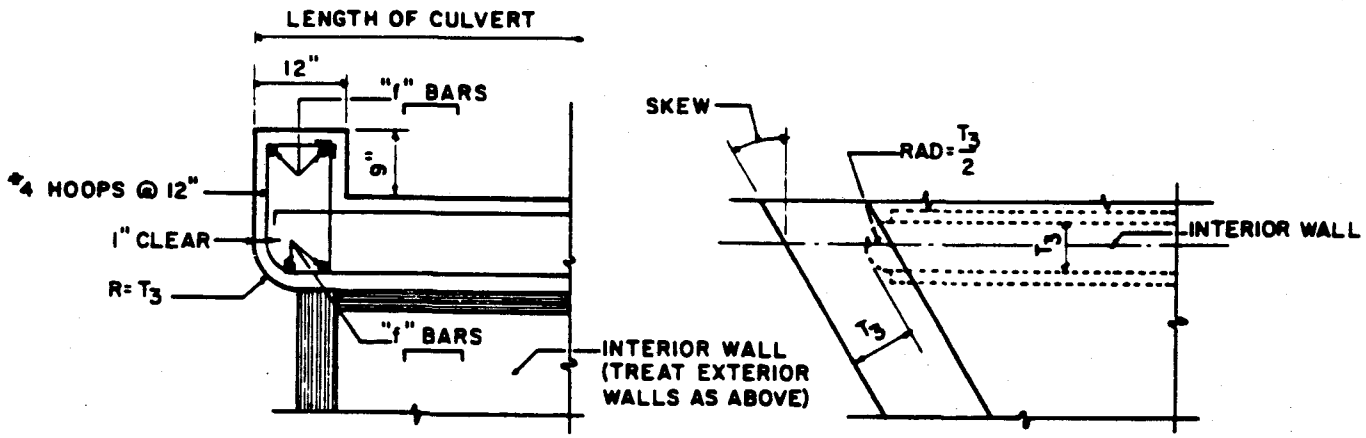

PARTIAL SECTION

PARTIAL PLAN - SKEWED

PARAPET DETAILS FOR MUTIPLE SPAN CULVERTS

PARAPET "f" BAR NOS.			
SKEW ANGLE / SPAN	0° TO 15°	16° TO 30°	31° TO 45°
3'	#4	#4	#5
4'	#4	#5	#6
5'	#5	#6	#7
6'	#6	#8	#8
8'	#8	#9	#9
10'	#9	#10	#10
12'	#10	#10	#10

"d" BARS SHALL BE AS NOTED IN THE SINGLE, DOUBLE AND TRIPLE BOX CULVERT DETAILS.

COUNTY OF KAUAI	PARAPET DETAILS FOR BOX CULVERTS SCALE: 1/2" = 1'-0" SEPTEMBER 1984	STANDARD DETAILS	D-51

CASE - 1
REINFORCED CONCRETE BEAM

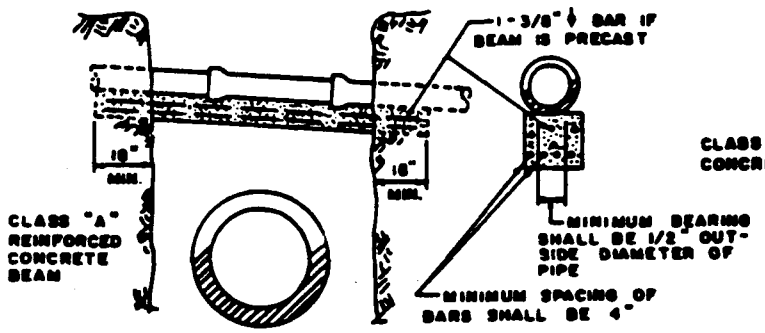

DIMENSIONS OF REINFORCED CONCRETE BEAMS:

TRENCH WIDTH	DEPTH OF BEAM	BAR SIZE	BEAM LENGTH
4'-0" or less	8"	5/8" ϕ	7'-0"
4'-6"	9"	3/4" ϕ	7'-6"
5'-0"	9-1/2"	3/4" ϕ	8'-0"
6'-0"	10-1/2"	3/4" ϕ	9'-0"
7'-0"	12"	7/8" ϕ	10'-0"
8'-0"	13"	7/8" ϕ	11'-0"

1. WIDTH OF BEAMS SHALL BE NOMINAL DIAMETER OF PIPE PLUS 2".
2. LENGTH OF BEAMS SHALL BE THE WIDTH OF TRENCH PLUS 3'-0".
3. REINFORCING STEEL SHALL BE PLACED 1-1/2" CLEAR FROM THE SIDE AND BOTTOM OF BEAMS.
4. IF BEAMS ARE PRECAST, 18" AT ENDS OF BEAMS SHALL BE BEDDED IN CLASS "D" CONCRETE.
5. CLASS "B" MORTAR SHALL BE PLACED BETWEEN TOP OF BEAMS AND BOTTOM OF PIPE TO GIVE BEARING.

CASE - 2
CONCRETE SUPPORT WALL

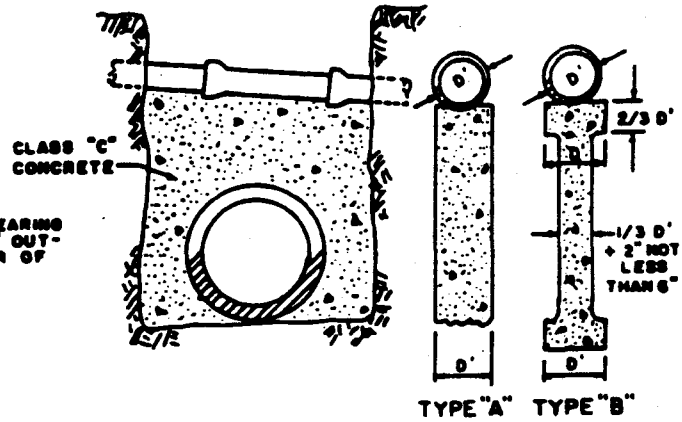

1. SUPPORTING WALL SHALL HAVE A FIRM BEARING ON THE SUBGRADE AND AGAINST THE SIDES OF THE EXCAVATION.
2. WALL SHALL BE AT LEAST 2-INCHES FREE AND CLEAR OF ANY GAS OR WATER OR OTHER CONDUIT OR DUCT.
3. EITHER TYPE "A" OR TYPE "B" CROSS SECTION MAY BE USED AT THE CONTRACTOR'S OPTION.
4. WHENEVER SO DIRECTED BY THE ENGINEER, THE CONTRACTOR SHALL PIERCE THE WALL WITH SUITABLE OPENINGS TO PREVENT UNEQUAL PRESSURE RESULTING FROM FLOODING THE BACKFILL. THE VOLUME OF THE PIERCED OPENING SHALL NOT EXCEED 1/2 THE VOLUME OF THE SUPPORTING WALL.

CASE - 3
CAST IRON PIPE

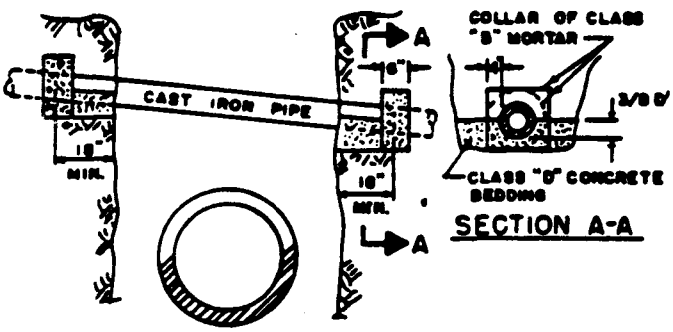

INSIDE OF CAST IRON PIPE:

	CLASS 150 PIPE			CLASS 250 PIPE		
INSIDE DIAMETER	6"	8"	10"	6"	8"	10"
MAXIMUM TRENCH WD.	4'-6"	5'-6"	7'-0"	5'-0"	6'-0"	8'-0"

NOTE: PIPE SHALL BE BEDDED IN 18" OF CONCRETE BEYOND EDGE OF TRENCH.

CASE - 4
SPUN REINFORCED CONCRETE PIPE STORM DRAINS ONLY

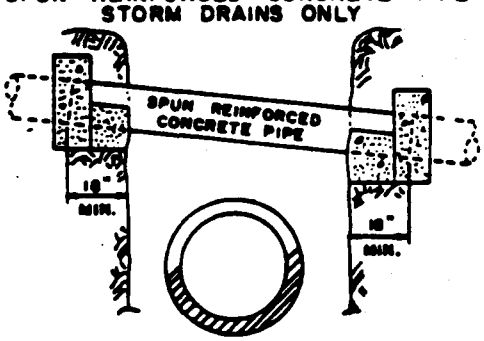

1. CLASS 2000-D SPUN REINFORCED CONCRETE PIPE OF THE SAME DIAMETER AS STORM MAY BE USED FOR STORM DRAINS ONLY WHERE WIDTH OF TRENCH IS 5'-0" OR LESS.
2. BEARING OF THE PIPE ENDS AND JOINT CLOSURE SHALL BE THE SAME AS FOR CASE 3.

METHODS OF SUPPORTING STORM DRAIN AND SEWER PIPES ACROSS TRENCHES

D-52	STANDARD DETAILS	SUPPORT FOR DRAIN AND SEWER PIPES ACROSS TRENCHES SEPTEMBER 1984 NOT TO SCALE	COUNTY OF KAUAI COUNTY OF MAUI COUNTY OF HAWAII

STANDARD DETAILS for Public Works Construction

September 1984

Sewers

PART 3

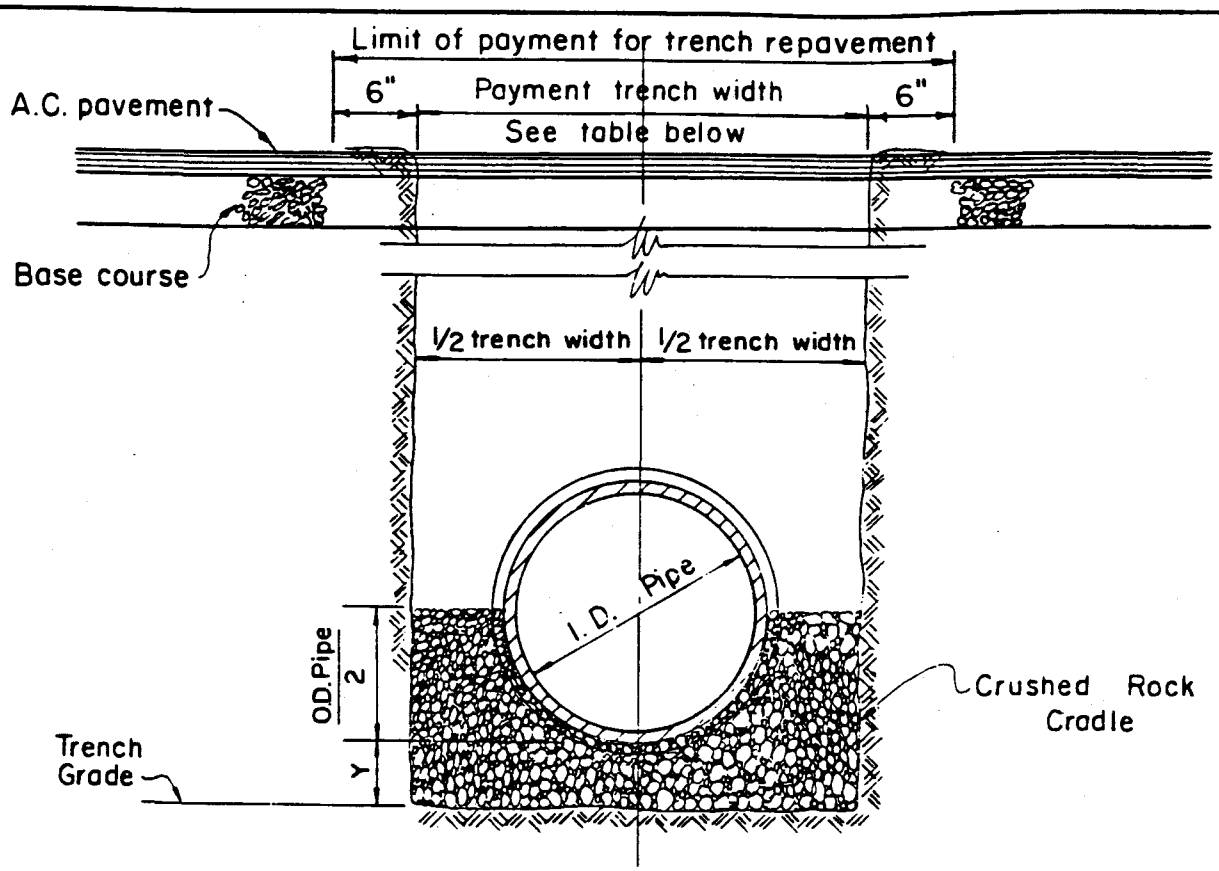

NOTE:

Payment width of cradle shall be payment trench width.

PIPE SIZE	PAYMENT TRENCH WIDTH	CRUSHED ROCK CRADLE	
		"Y" Min.	CY/LF
6"	24"	4"	.042
8"	24"	4"	.045
10"	24"	4"	.047
12"	30"	5"	.073
15"	38"	6"	.114
18"	41"	6"	.130
21"	45"	7"	.163
24"	50"	8"	.204
27"	53"	9"	.238
30"	57"	10"	.280
36"	69"	11"	.390
42"	76"	12"	.457
48"	84"	12"	.546
54"	91"	12"	.615

ROCK CRADLE FOR SEWER PIPE

COUNTY OF KAUAI CITY & COUNTY OF HONOLULU COUNTY OF MAUI COUNTY OF HAWAII	ROCK CRADLE FOR SEWER PIPE NOT TO SCALE SEPTEMBER 1984	STANDARD DETAILS	S-1

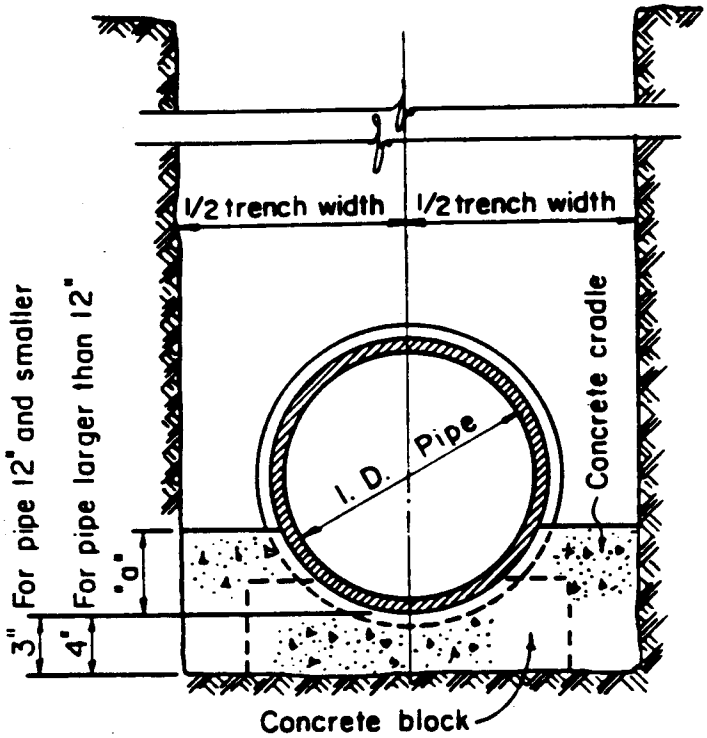

NOTE:

Payment width of cradle shall be payment trench width.

DIMENSIONS OF CONCRETE CRADLE		
Pipe Size	"a"	Width
6"	3"	24"
8"	3"	24"
10"	3"	24"
12"	3"	30"
15"	4"	38"
18"	5"	41"
21"	5"	45"
24"	6"	50"
27"	7"	53"
30"	7"	57"

S-2	STANDARD DETAILS	CONCRETE CRADLE FOR VITRIFIED CLAY PIPE SEPTEMBER 1984 NOT TO SCALE	COUNTY OF KAUAI CITY & COUNTY OF HONOLULU COUNTY OF MAUI COUNTY OF HAWAII

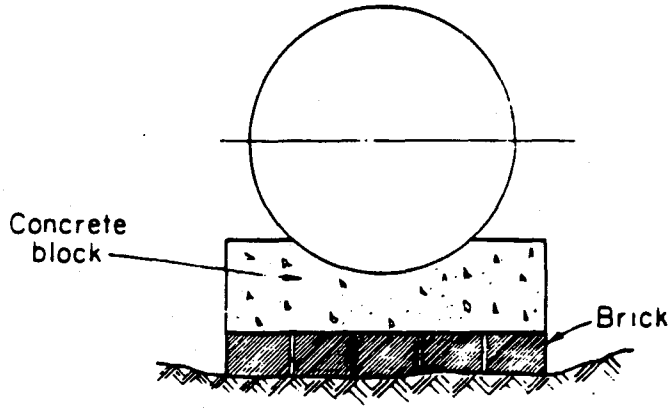

METHOD OF USING BRICKS
UNDER CONCRETE BLOCKS

Not to Scale

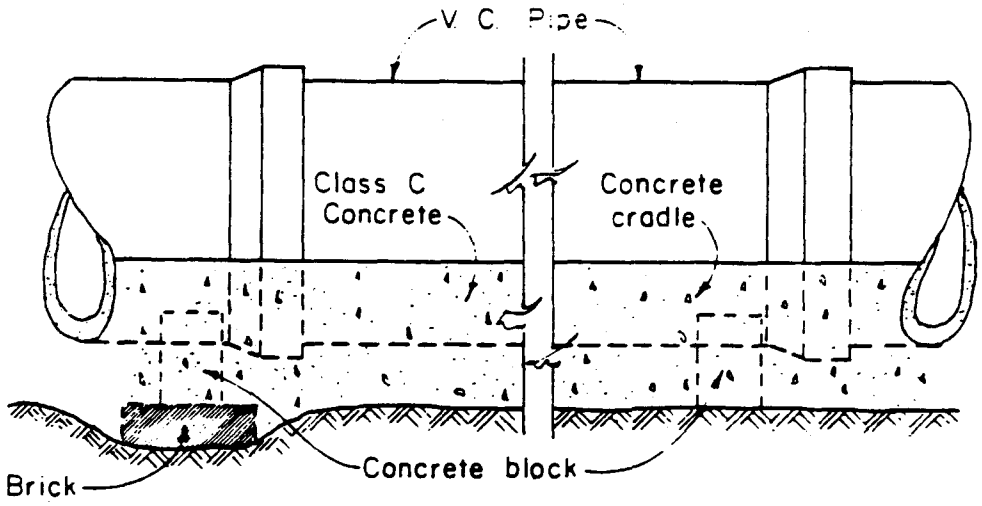

ELEVATION SHOWING
METHOD OF LAYING PIPE

Not to Scale

Contractor shall set Concrete Blocks on undisturbed ground. Where ground is too low, the contractor shall not heap up dirt under the Concrete Block but use Concrete Bricks to take up the deficiency, scraping away beneath Concrete Block to give sufficient room for Brick.

COUNTY OF KAUAI CITY & COUNTY OF HONOLULU COUNTY OF MAUI COUNTY OF HAWAII	METHOD OF LAYING PIPE NOT TO SCALE SEPTEMBER 1984	STANDARD DETAILS	S-3

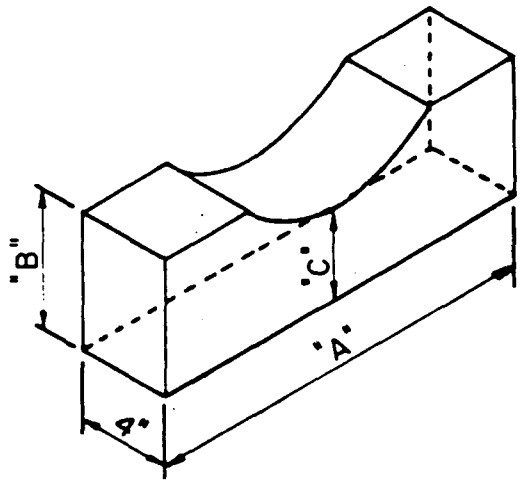

DETAIL OF PRECAST CONCRETE PIPE BLOCK

Not to Scale

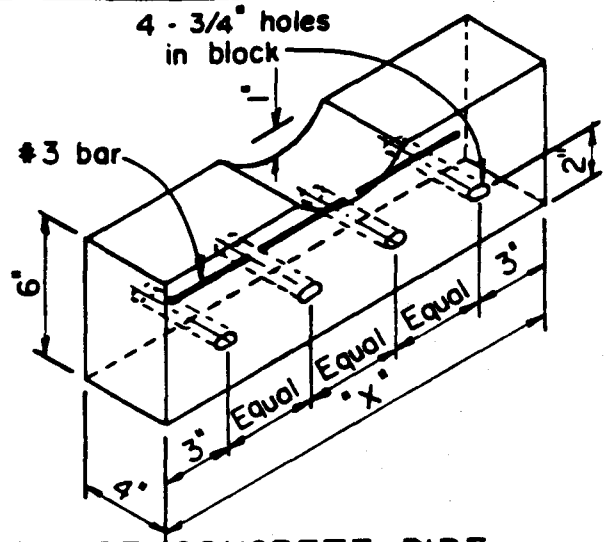

DETAIL OF CONCRETE PIPE BLOCK FOR REINF. CRADLE

Not to Scale

CONCRETE BLOCK DIMENSIONS			
Pipe Size	"A"	"B"	"C"
6"	1' - 2"	6"	3"
8"	1' - 5"	6"	3"
10"	1' - 7"	6"	3"
12"	1' - 7"	6"	3"
15"	1' - 8"	6"	4"
18"	1' - 9"	6"	4"
21"	1' - 10"	6"	4"
24"	1' - 11"	6"	4"
27"	2' - 0"	6"	4"
30"	2' - 3"	6"	4"

DIM. OF REINF. CONCRETE BLOCK	
Pipe Size	"X"
6"	1' - 6"
8"	1' - 6"
10"	1' - 8"
12"	1' - 8"
15"	1' - 10"
18"	1' - 10"
21"	1' - 10"
24"	2' - 0"
27"	2' - 0"
30"	2' - 0"

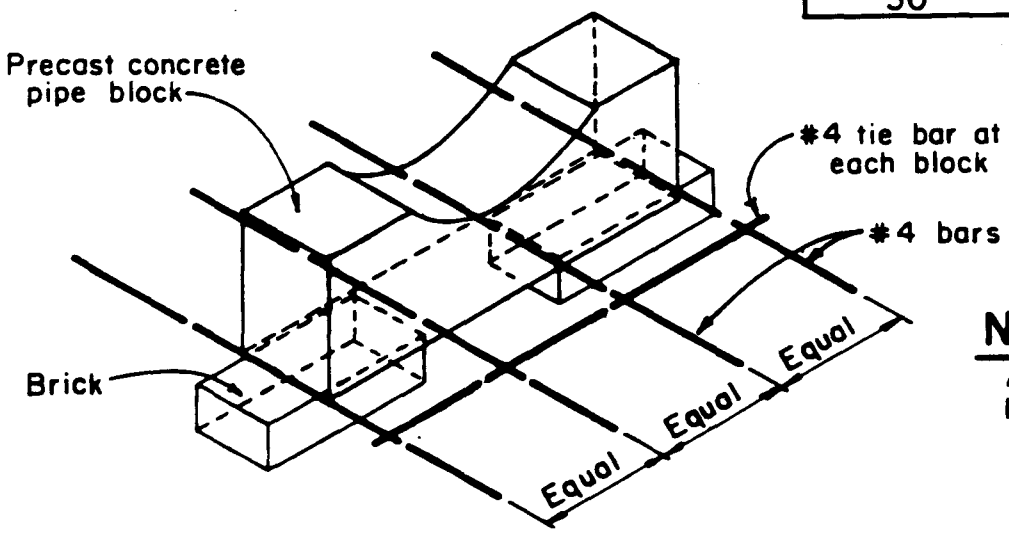

NOTE:
Add brick for larger size pipe

ALTERNATE DETAIL OF CONC. PIPE BLOCK FOR REINF. CRADLE

Not to Scale

S-4	STANDARD DETAILS	PRE-CAST CONCRETE PIPE BLOCK SEPTEMBER 1984 NOT TO SCALE	COUNTY OF KAUAI CITY & COUNTY OF HONOLULU COUNTY OF MAUI COUNTY OF HAWAII

NOTE:

Reinforcing bars of laterals shall be lapped 40 dia. to reinforcing bars of mains.

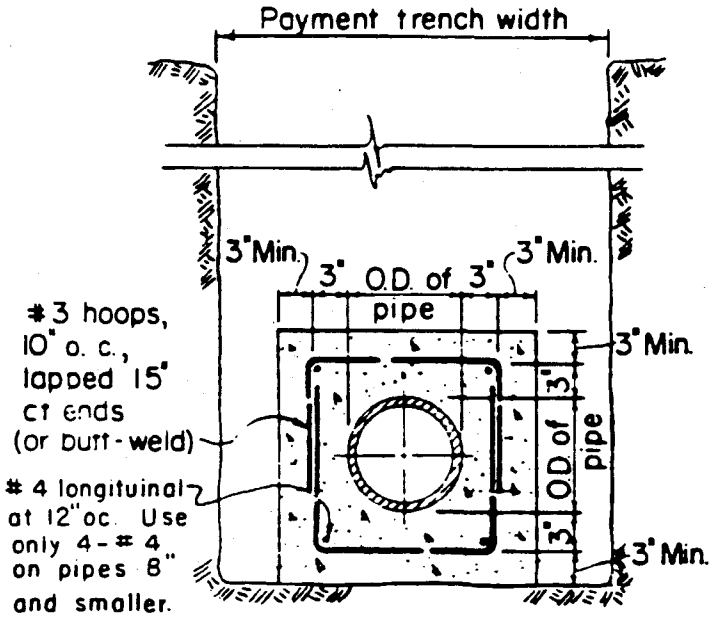

DETAIL OF CONCRETE JACKET

FOR PIPES 12" AND SMALLER

Scale: 3/4" = 1'-0"

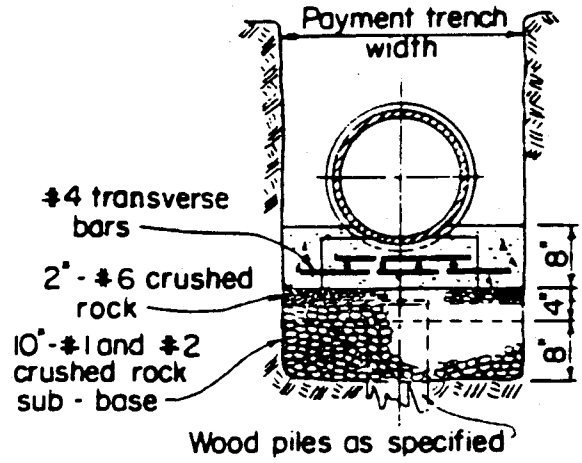

SECTION "A-A"

Scale: 1/2" = 1'-0"

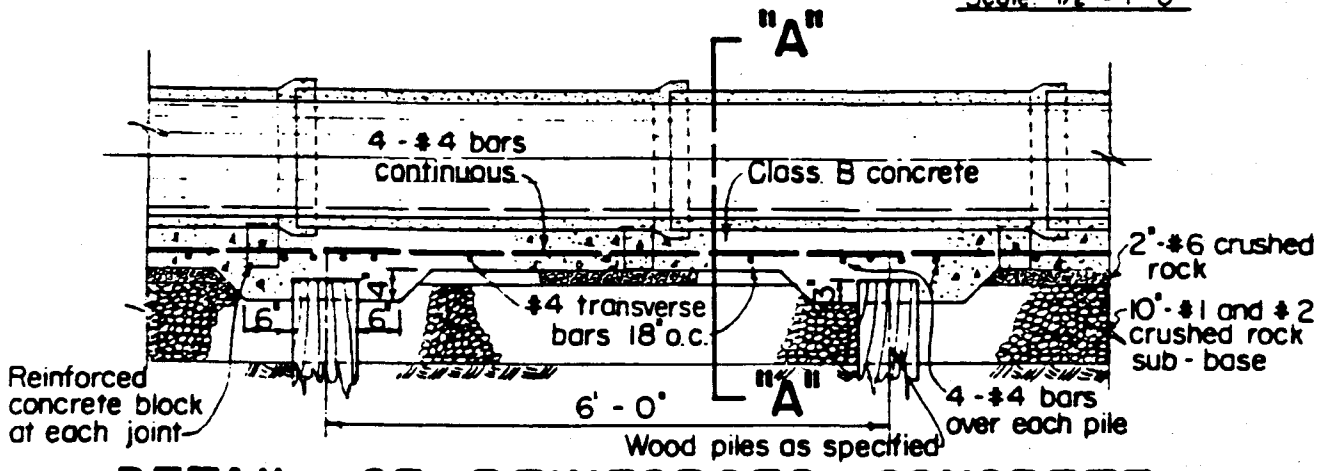

DETAIL OF REINFORCED CONCRETE CRADLE ON WOOD PILES

(FOR 6, 8, 10, AND 12 IN. V. C. PIPE)

Scale: 1/2" = 1'-0"

DETAIL OF REINFORCED CONCRETE CRADLE WITHOUT PILES SIMILAR EXCEPT FOR WOOD PILES AND PILE CAPS

COUNTY OF KAUAI CITY & COUNTY OF HONOLULU COUNTY OF MAUI COUNTY OF HAWAII	CONCRETE JACKET, REINFORCED CONCRETE CRADLE SCALE: AS NOTED SEPTEMBER 1984	STANDARD DETAILS	S-5

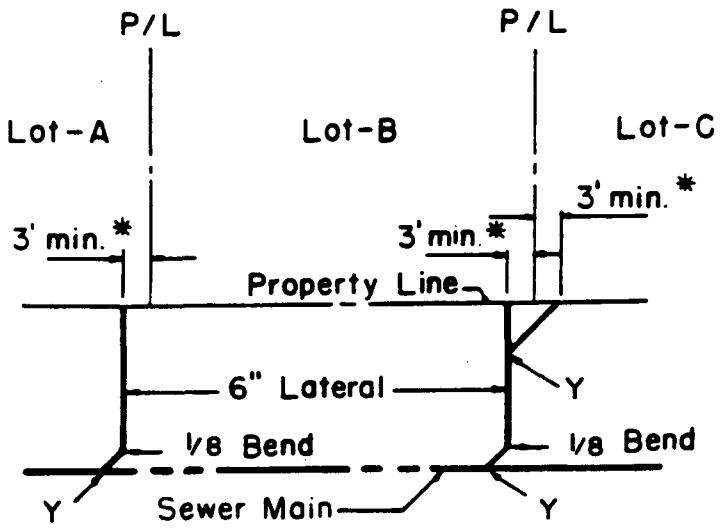

LAYOUT

NOTE:

Permission is to be secured from property owner before construction at property line is started.

*4' for Maui only

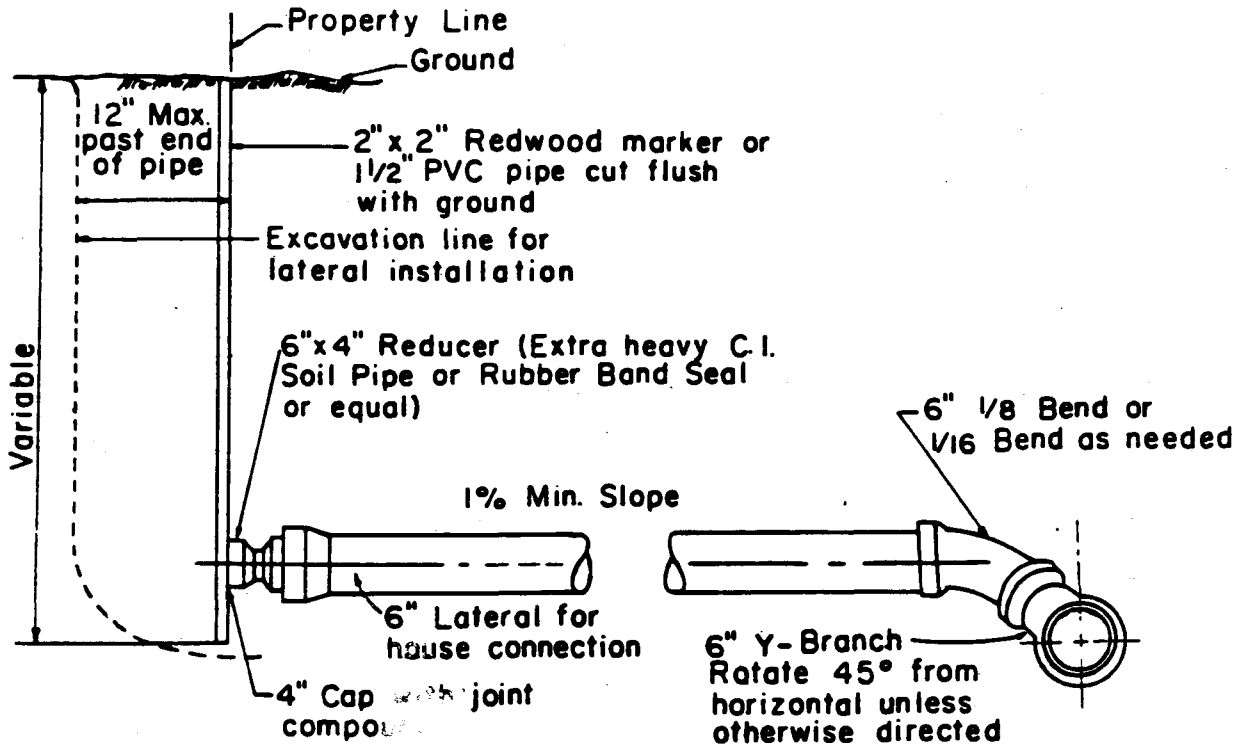

DE AT PROPERTY LINE
AT MAIN LINE

S-6	STANDARD DETAILS	LATERALS SEPTE 4 NOT TO SCALE	COUNTY OF KAUAI CITY & COUNTY OF HONOLULU COUNTY OF MAUI COUNTY OF HAWAII

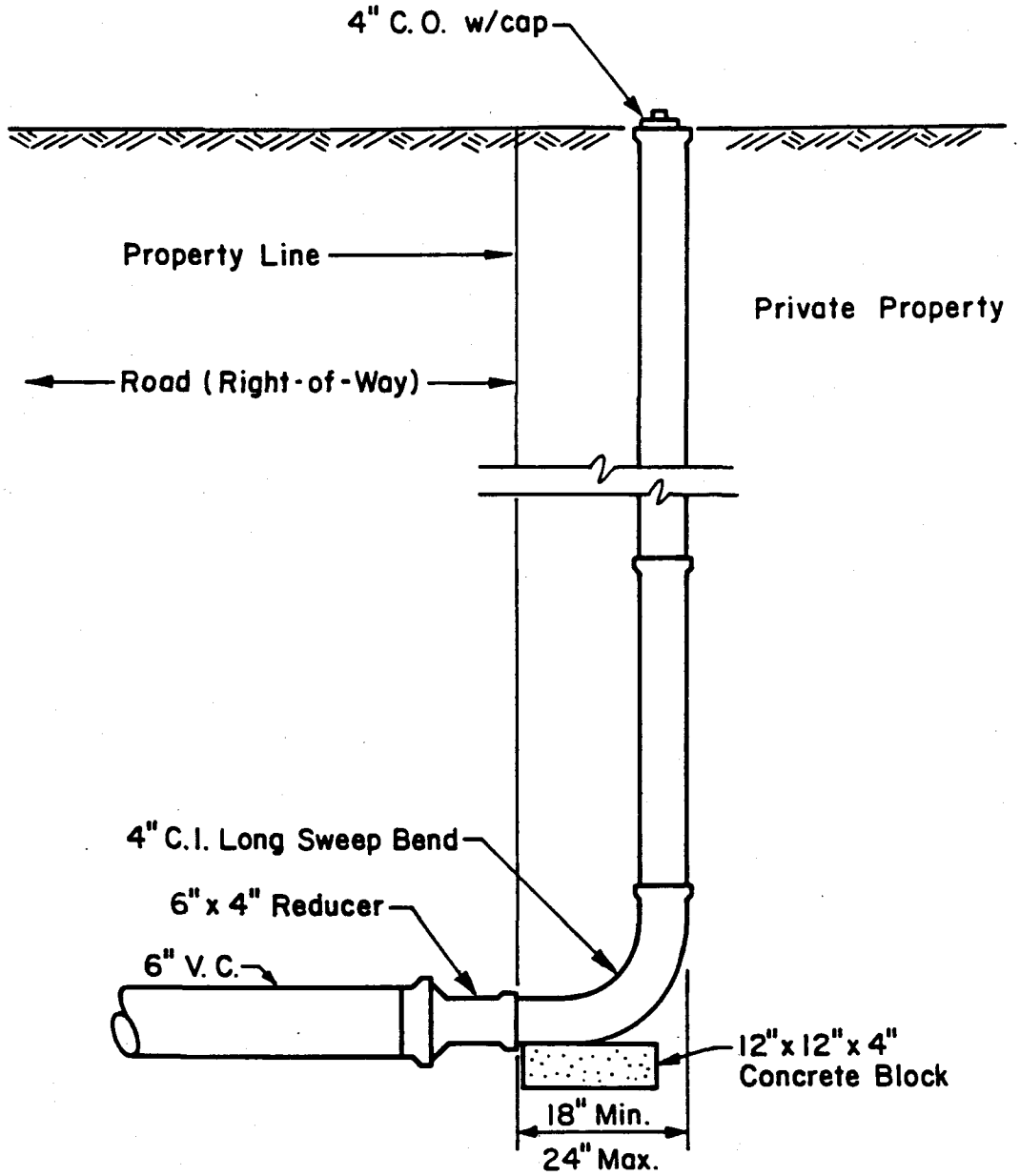

ADVANCE RISER CONNECTION

Not to Scale

CITY & COUNTY OF HONOLULU	ADVANCE RISER CONNECTION NOT TO SCALE SEPTEMBER 1984	STANDARD DETAILS	S-7

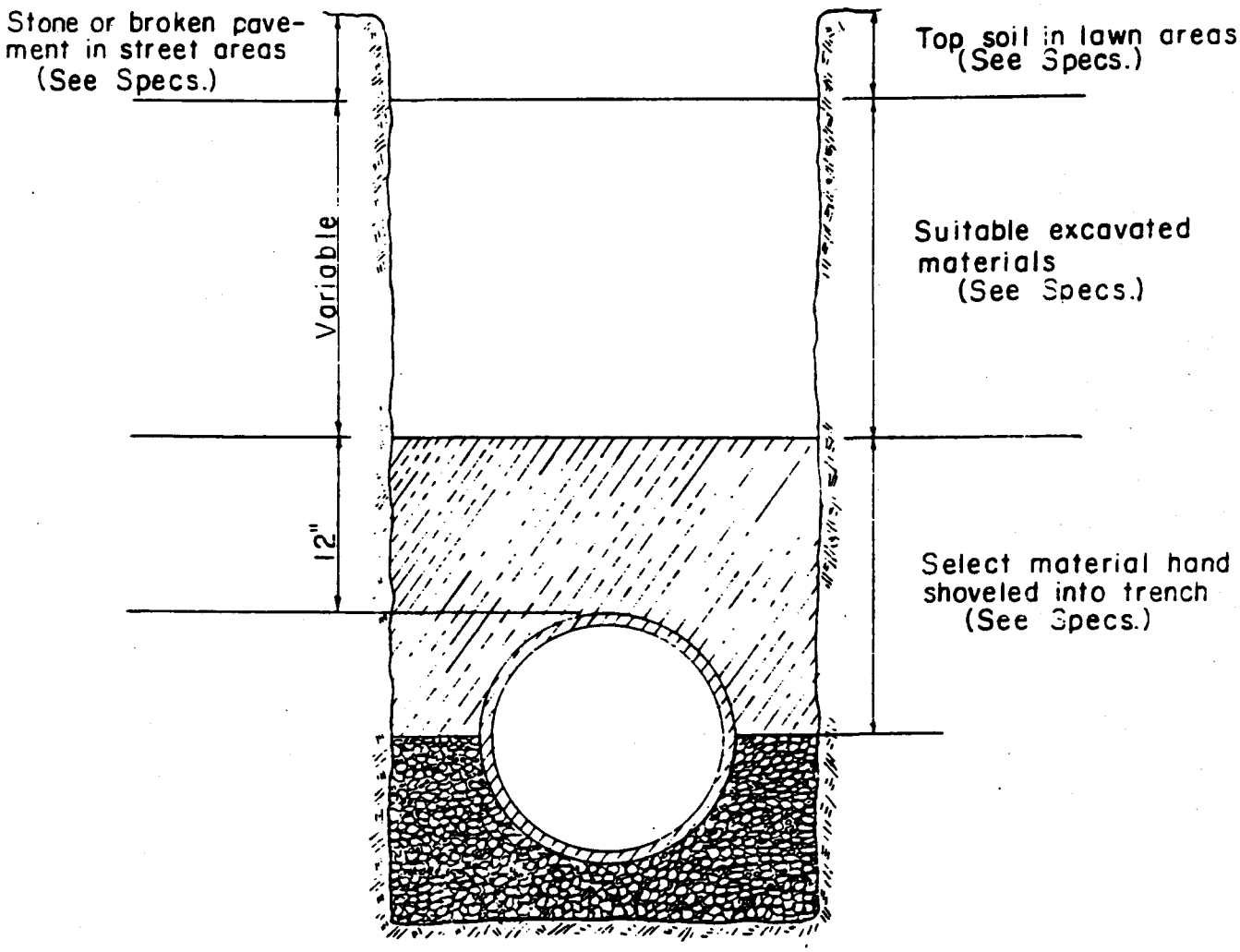

NOT TO SCALE

S-8	STANDARD DETAILS	METHOD OF BACKFILL SEPTEMBER 1984 NOT TO SCALE	COUNTY OF KAUAI CITY & COUNTY OF HONOLULU COUNTY OF MAUI COUNTY OF HAWAII

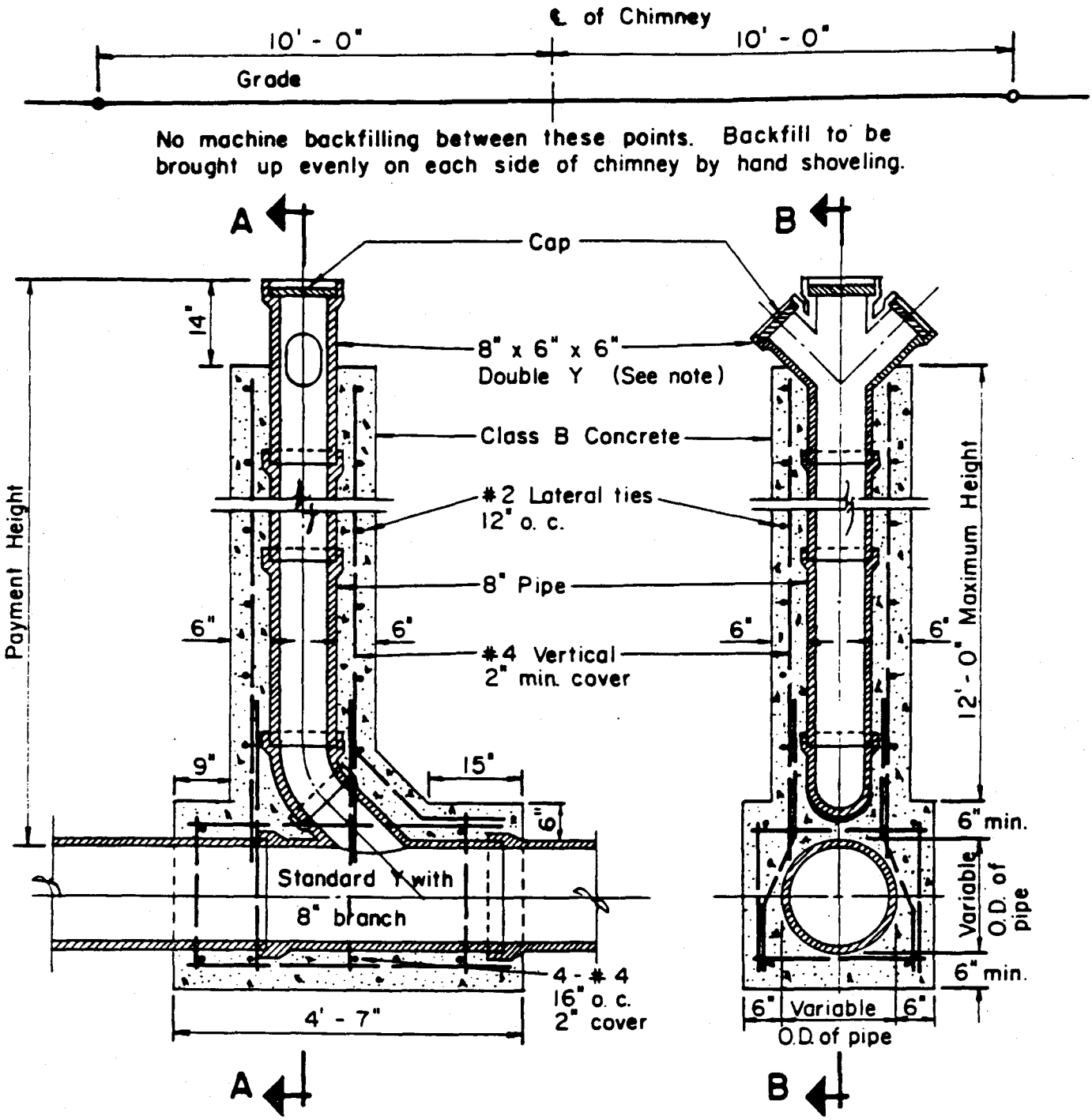

SECTION B-B

SECTION A-A

DETAILS OF CHIMNEY

Scale: 1/2" = 1' - 0"

Double "Y" may be replaced by one or two single wyes with inverts as noted on the plans.

NOTE:

All reinforcing rods #4 except lateral ties. Laps - 40 diameters.

COUNTY OF KAUAI CITY & COUNTY OF HONOLULU COUNTY OF MAUI COUNTY OF HAWAII	CHIMNEY SCALE: 1/2" = 1'-0" SEPTEMBER 1984	STANDARD DETAILS	S-9

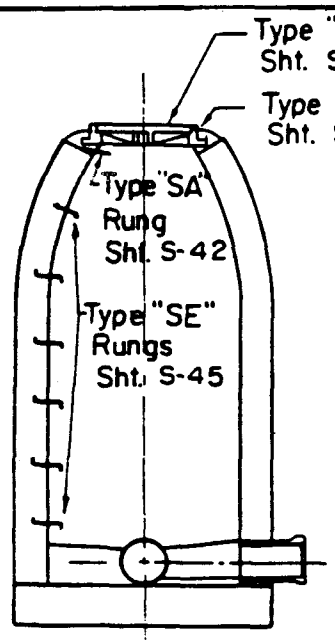

PLAIN M.H.
(BRICK & CAST-IN-PLACE)
SHTS. S-26, S-27

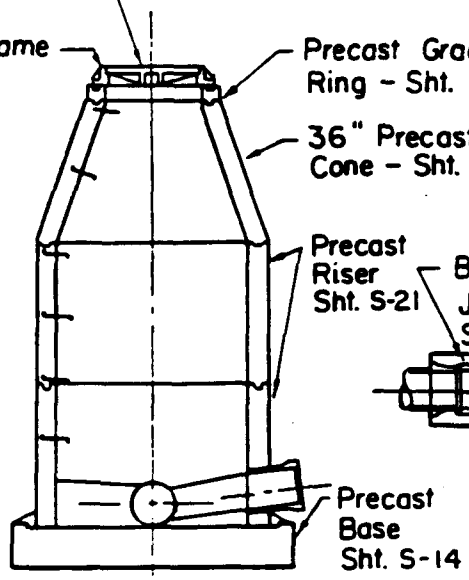

PLAIN M.H.
(PRECAST) SHT. S-13

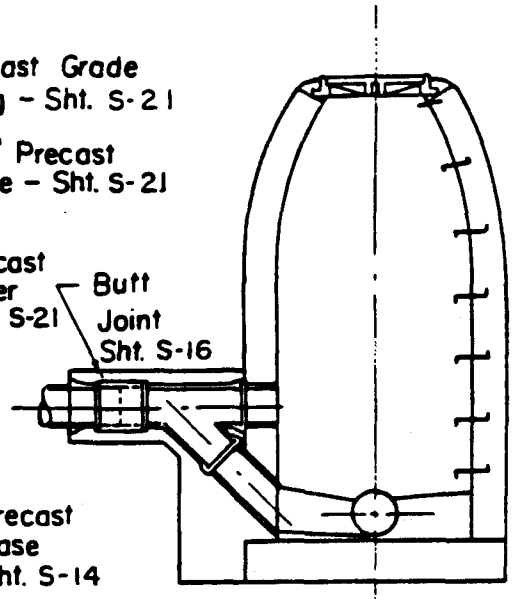

SHALLOW DROP M.H.
SHTS. S-15, S-28

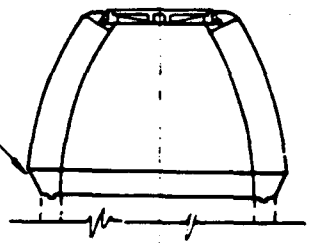

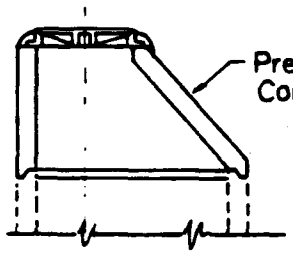

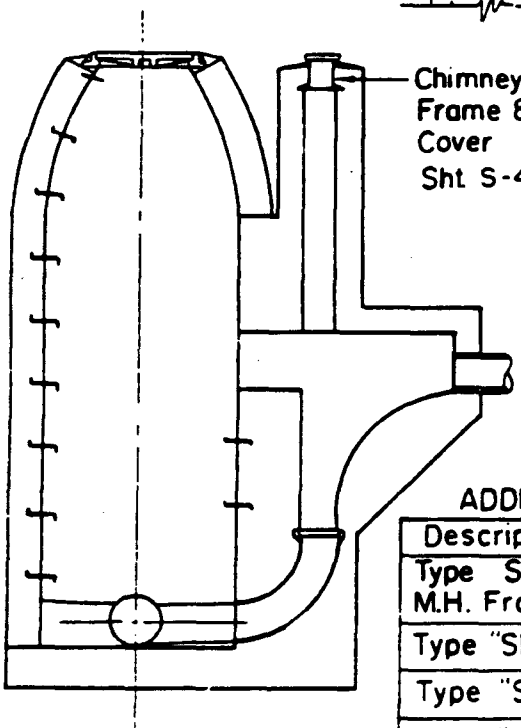

DROP M.H.
SHTS. S-17, S-18,
S-29, S-30

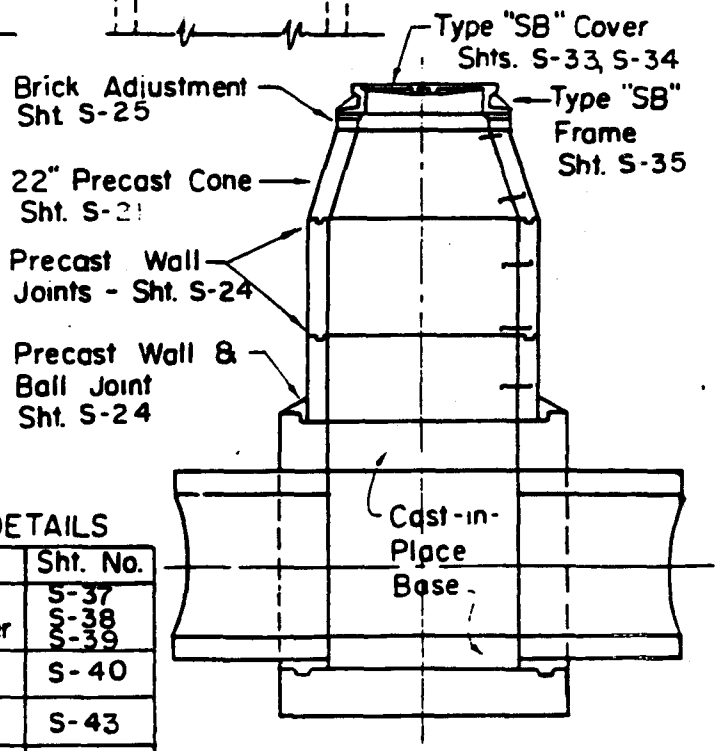

PLAIN M.H.
36" TO 48" DIA. PIPES
SHTS. S-19, S-20

ADDITIONAL DETAILS

Description	Sht. No.
Type SC Pressure M.H. Frame & Cover	S-37 S-38 S-39
Type "SD" Frame	S-40
Type "SC" Rung	S-43
Type "SD" Rung	S-44
Modified "SB" (Press) Frame & Cover	S-36

SCALE : 1/4"=1'-0"

S-10	STANDARD DETAILS	INDEX TO SEWER MANHOLE DETAILS SEPTEMBER 1984 SCALE: 1/4" = 1'-0"	COUNTY OF KAUAI CITY & COUNTY OF HONOLULU COUNTY OF MAUI COUNTY OF HAWAII

MANHOLE NOTES

BASES

1. When precast concrete bases are used, a leveling concrete grout of 2" minimum thickness shall be placed.

WALLS

1. When precast walls are used, the height adjustment shall be in the bottom section.
2. The precast manhole riser section shall be cast with openings whenever sewer pipes must pass thru.
3. Openings in manhole walls shall be patched with epoxy grout when required.
4. Precast cones shall not be used in easement areas unless approved by the Engineer.
5. Manhole walls of reinforced concrete shall be to a height 1' above normal ground water table.

FRAMES AND COVERS

1. Generally type "SA" is used. Type "SD" frame is used in sidewalk or slab areas. Types "SB" and "SC" shall be used only when indicated.

RUNGS

1. Rungs shall be placed in all manholes unless otherwise indicated.
2. One type "SA" rung is used as a grab bar at the top of the manhole.
3. Type "SE" rungs are generally used unless otherwise indicated.
4. Type "SC" rungs shall be used in corrosive conditions in lieu of "SE" when specified.
5. Rungs shall not be aligned above any flow line except in drop manholes, where two rungs are located below the drop pipe opening and level with the rungs on the opposite wall.
6. Rungs shall not be placed in manholes less than 3' high.
7. Type "SE" or designated rungs shall be evenly spaced. Maximum spacing shall be 16" on center.

DROP CONNECTIONS

1. Pipe shall be of vitrified clay or cast iron except PVC may be used if PVC pipeline is permitted.

MANHOLE CHIMNEYS

1. Pipe shall be vitrified clay except PVC may be used if PVC pipeline is permitted.

STUBS AND ENTRY PIPE

1. All pipes entering or leaving a manhole shall have joints within 2' of the manhole wall. Joints within 2' of the manhole wall may be omitted when approved resilient manhole connectors are used.

2. When providing for future alignment, the bell of the stub shall be flush with the outside of the manhole wall and capped.

3. Where the sewer pipe runs straight thru the manhole, the Contractor may lay the pipe thru the manhole with the manhole invert and base poured together. After the concrete has hardened, the upper portion of the pipe within the manhole shall be carefully broken out and any unevenness shall be patched with mortar.

4. Drop manholes shall have a bell joint flush with the exterior wall of the drop.

5. When not otherwise noted, manhole stubs shall be sloped as follows:

Pipe Size	Rise Per Foot
6"	1/8"
8"	3/32"
10"	1/16"
12"	1/16"

TRANSITION RING

1. A transition ring shall be used whenever a brick wall or cone is placed above a precast concrete wall.

REINFORCING STEEL

1. All reinforcing bars interfering with pipes shall be bent to clear them.

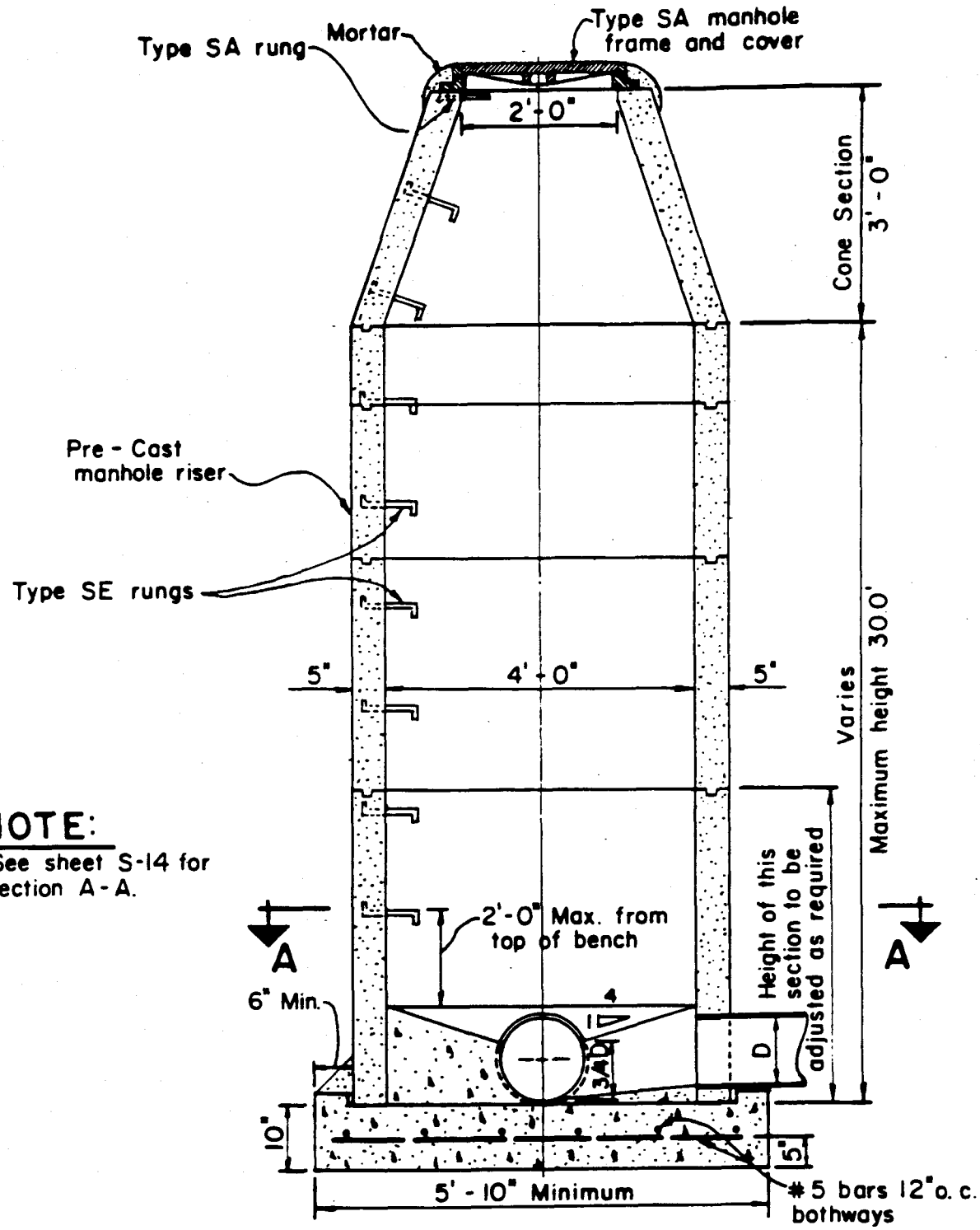

NOTE:

1. See sheet S-14 for section A-A.

PLAIN MANHOLE
PRE-CAST CONCRETE

Scale: 1/2" = 1'-0"

COUNTY OF KAUAI CITY & COUNTY OF HONOLULU COUNTY OF MAUI COUNTY OF HAWAII	PRE-CAST CONCRETE PLAIN MANHOLE SCALE: 1/2" = 1'-0" SEPTEMBER 1984	STANDARD DETAILS	S-13

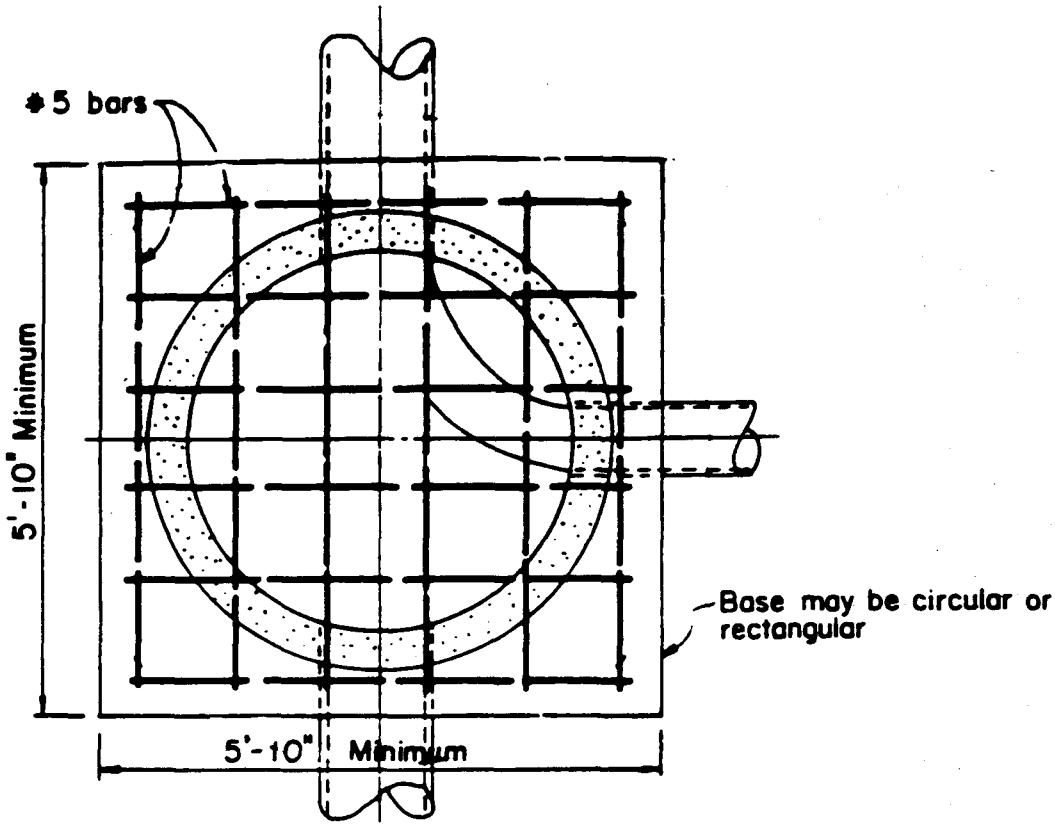

SECTION A-A

Scale: 1/2" = 1'-0"

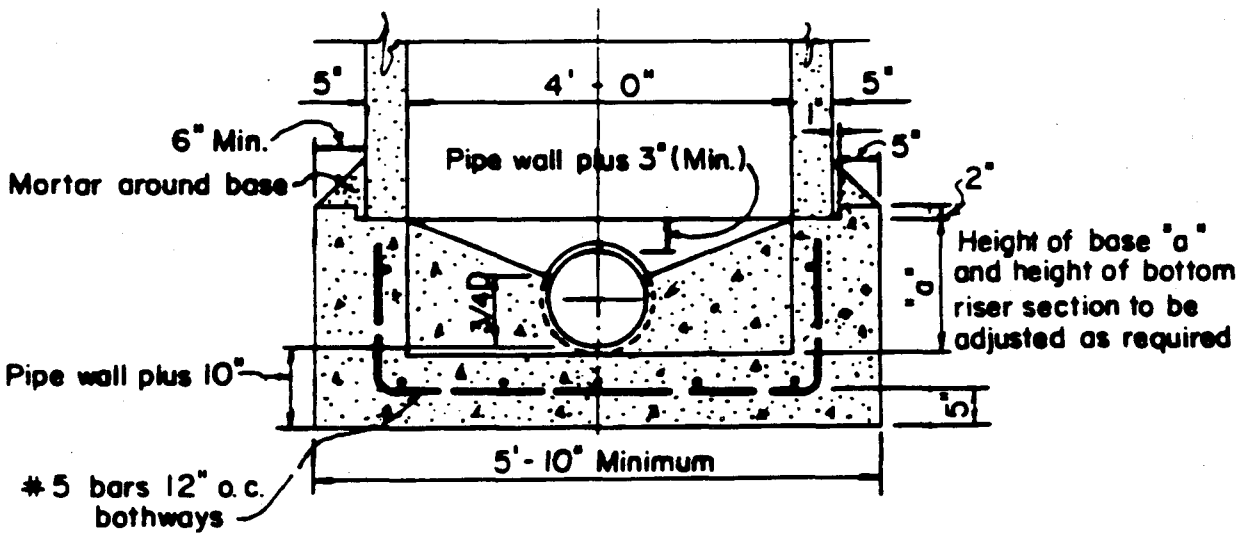

ALTERNATE BASE
PRE-CAST CONCRETE M.H.

Scale: 1/2" = 1'-0"

S-14	STANDARD DETAILS	PRE-CAST CONCRETE PLAIN MANHOLE - SECTION AND ALTERNATE BASE SEPTEMBER 1984 SCALE: 1/2" = 1'-0"	COUNTY OF KAUAI CITY & COUNTY OF HONOLULU COUNTY OF MAUI COUNTY OF HAWAII

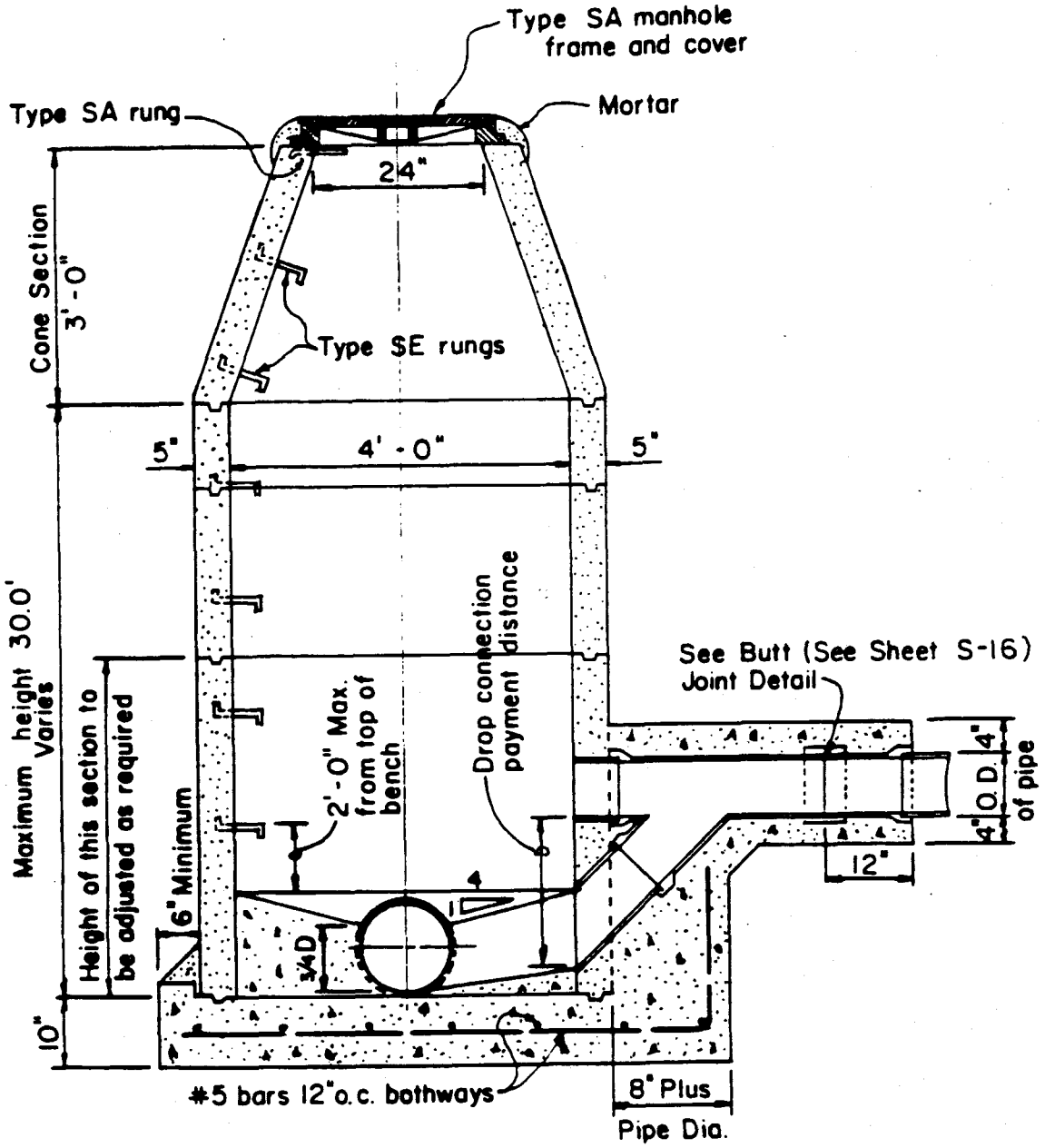

SHALLOW DROP MANHOLE

FOR DROP UNDER 5.0 FEET

PRE - CAST CONCRETE

Scale: 1/2" = 1'-0"

COUNTY OF KAUAI CITY & COUNTY OF HONOLULU COUNTY OF MAUI COUNTY OF HAWAII	PRE-CAST CONCRETE SHALLOW DROP MANHOLE SCALE: 1/2" = 1'-0" SEPTEMBER 1984	STANDARD DETAILS	S-15

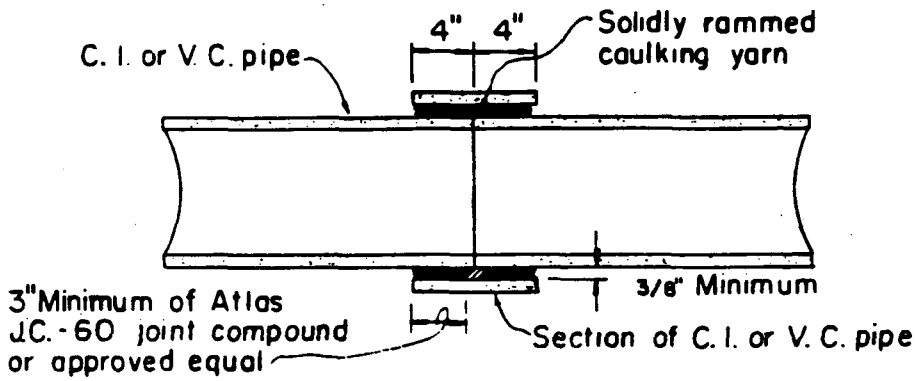

CAULKED JOINT

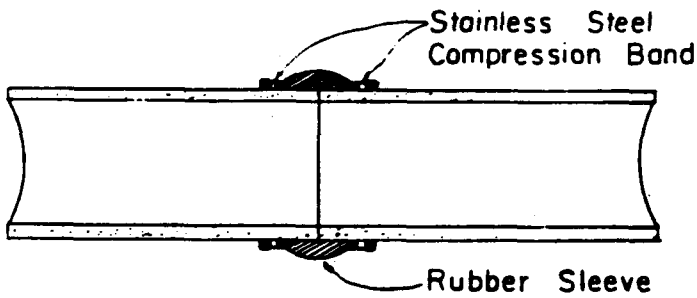

RUBBER COMPRESSION JOINT

BUTT JOINT DETAILS

Scale: 1" = 1'-0"

S-16	STANDARD DETAILS	PRE-CAST CONCRETE SHALLOW DROP MANHOLE - BUTT JOINT DETAILS SEPTEMBER 1984 SCALE: 1" = 1'-0"	COUNTY OF KAUAI CITY & COUNTY OF HONOLULU COUNTY OF MAUI COUNTY OF HAWAII

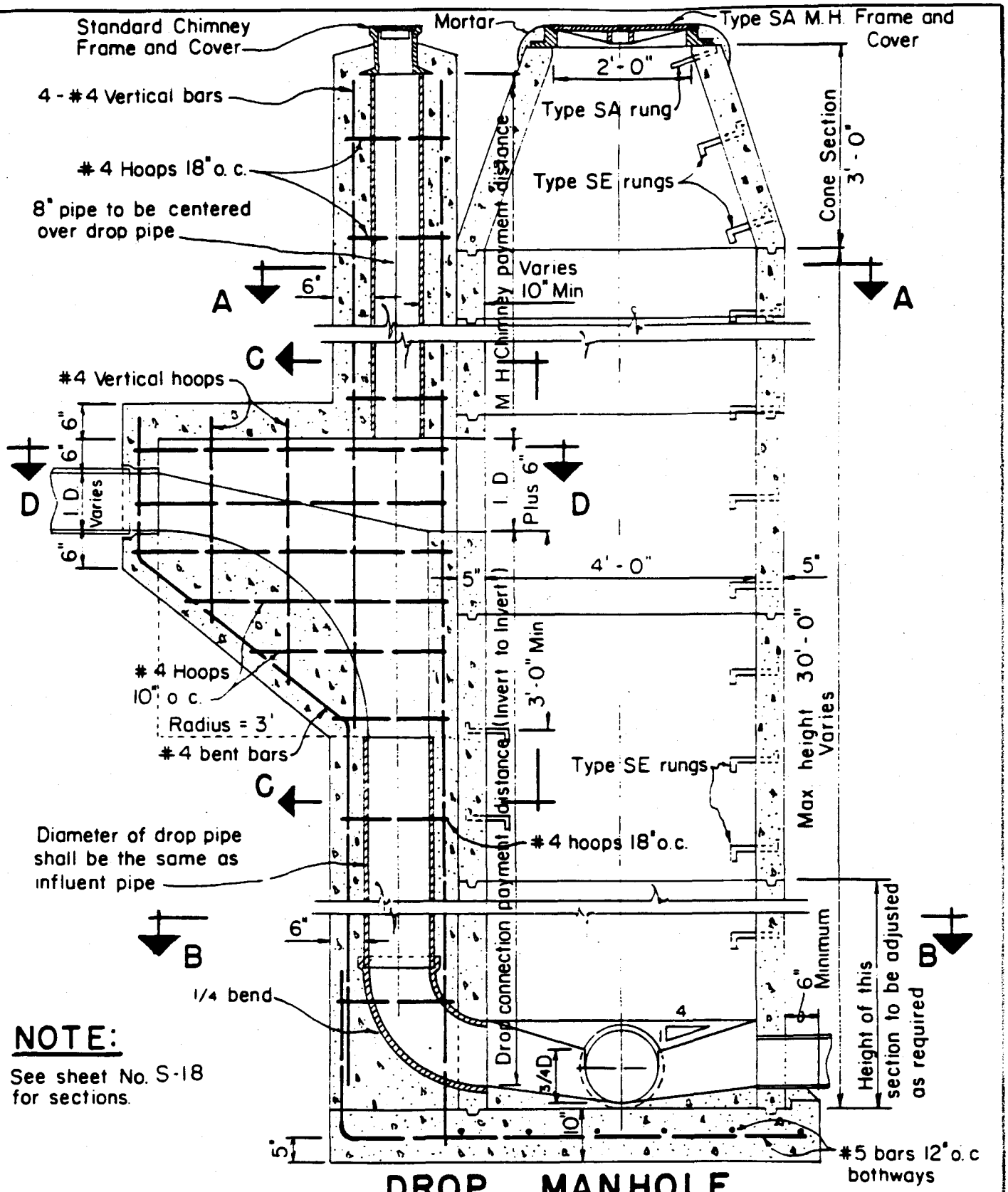

NOTE:

See sheet No. S-18 for sections.

DROP MANHOLE
FOR DROPS OVER 5.0 FEET
PRE - CAST CONCRETE

COUNTY OF KAUAI CITY & COUNTY OF HONOLULU COUNTY OF MAUI COUNTY OF HAWAII	PRE-CAST CONCRETE DROP MANHOLE SCALE: 1/2" = 1'-0" SEPTEMBER 1984	STANDARD DETAILS	S-17

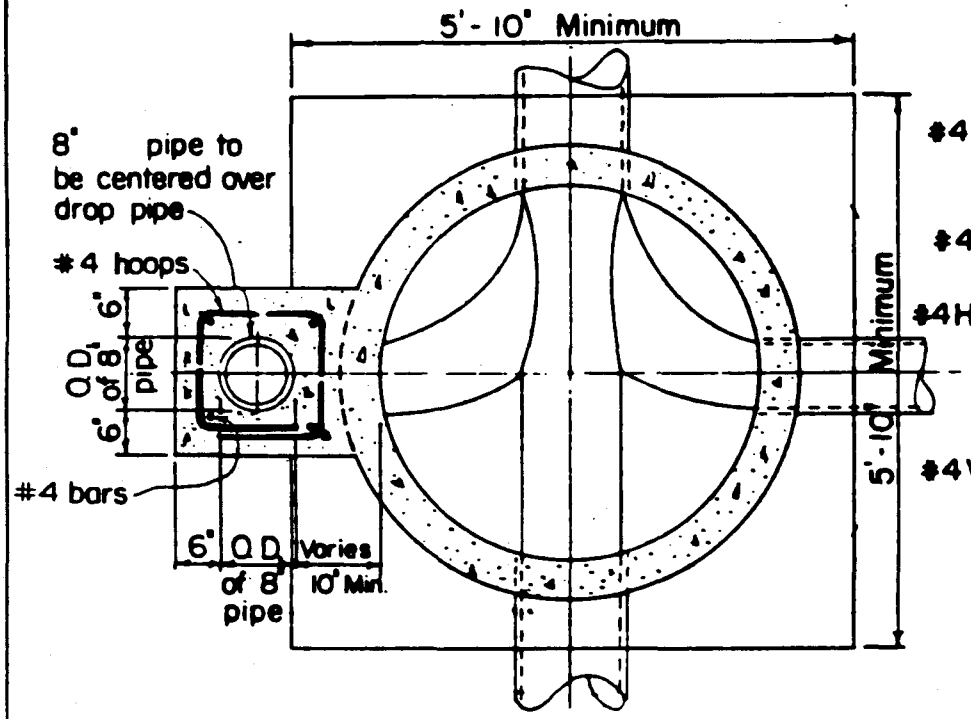

SECTION A-A

Scale: 1/2" = 1'-0"

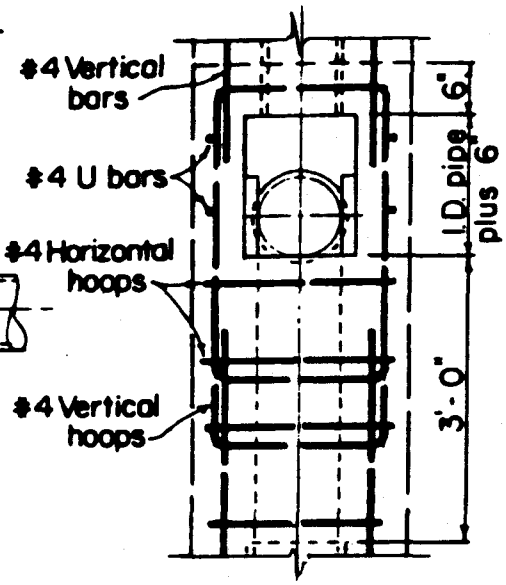

SECTION C-C

Scale: 1/2" = 1'-0"

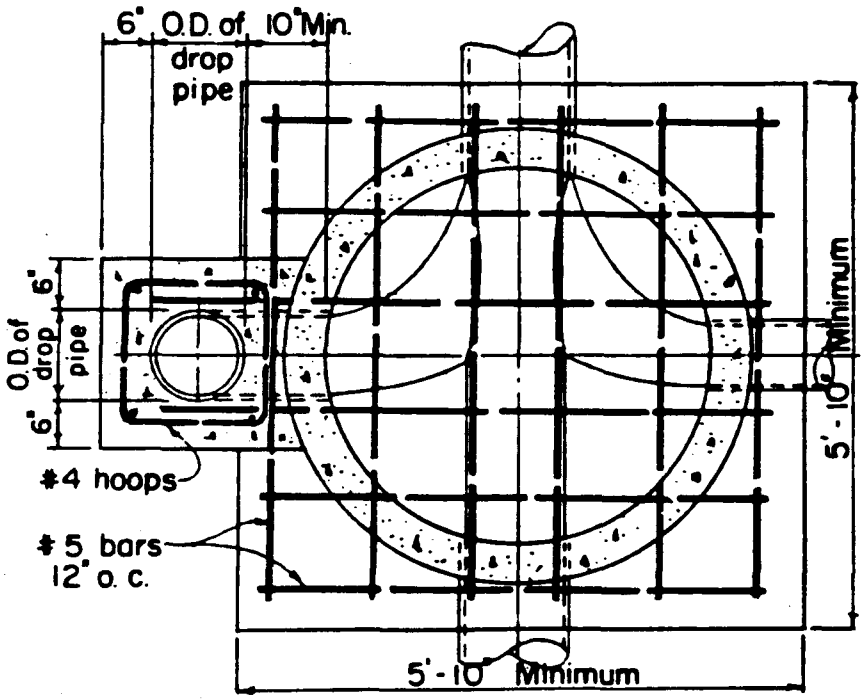

SECTION B-B

Scale: 1/2" = 1'-0"

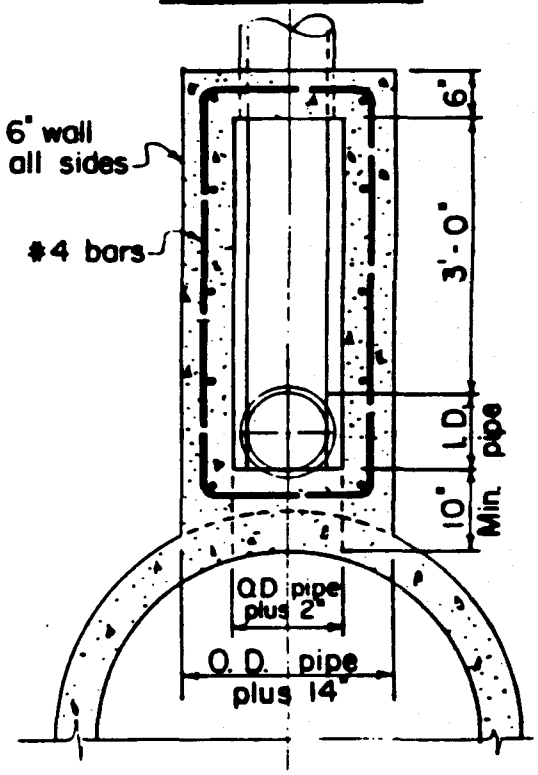

SECTION D-D

Scale: 1/2" = 1'-0"

S-18	STANDARD DETAILS	PRE-CAST CONCRETE DROP MANHOLE - SECTIONS SEPTEMBER 1984 SCALE: 1/2" = 1'-0"	COUNTY OF KAUAI CITY & COUNTY OF HONOLULU COUNTY OF MAUI COUNTY OF HAWAII

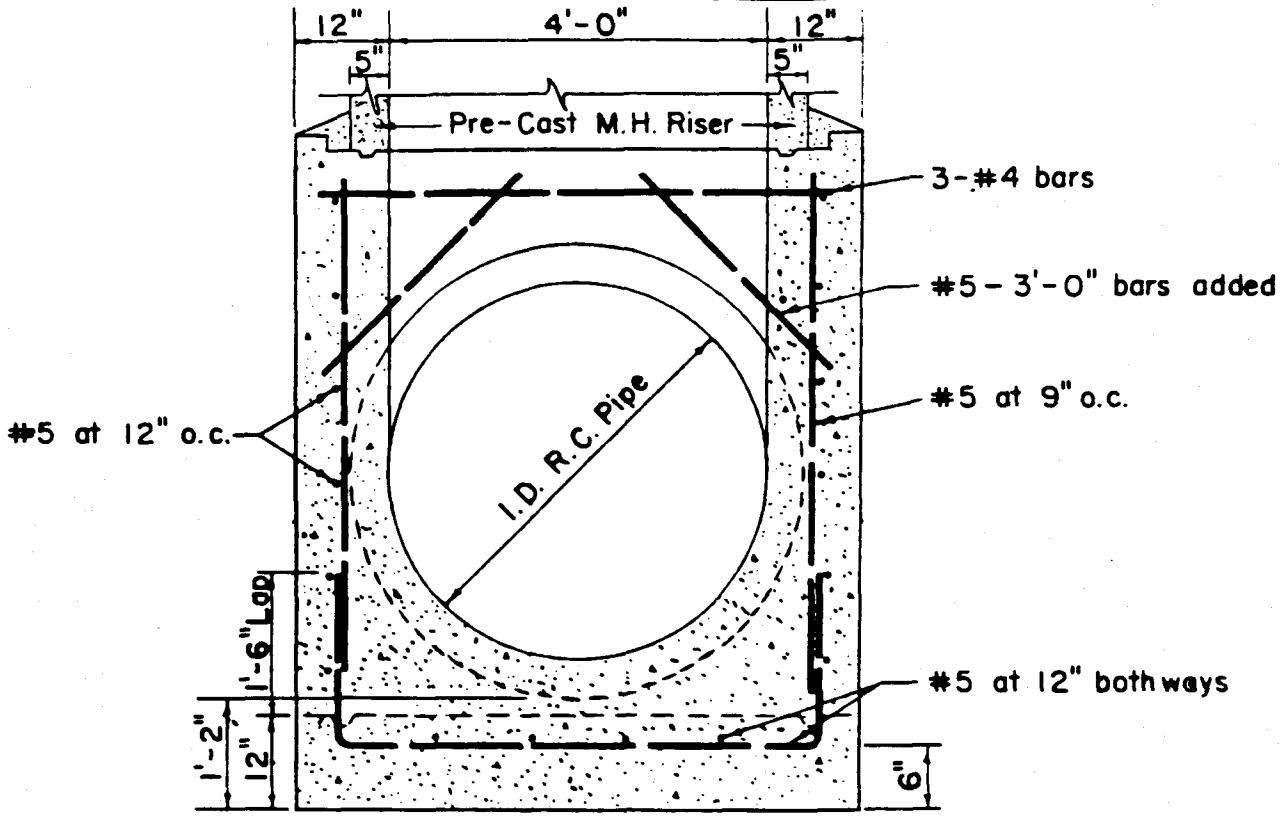

SECTION A-A

Scale: 1/2" = 1'-0"

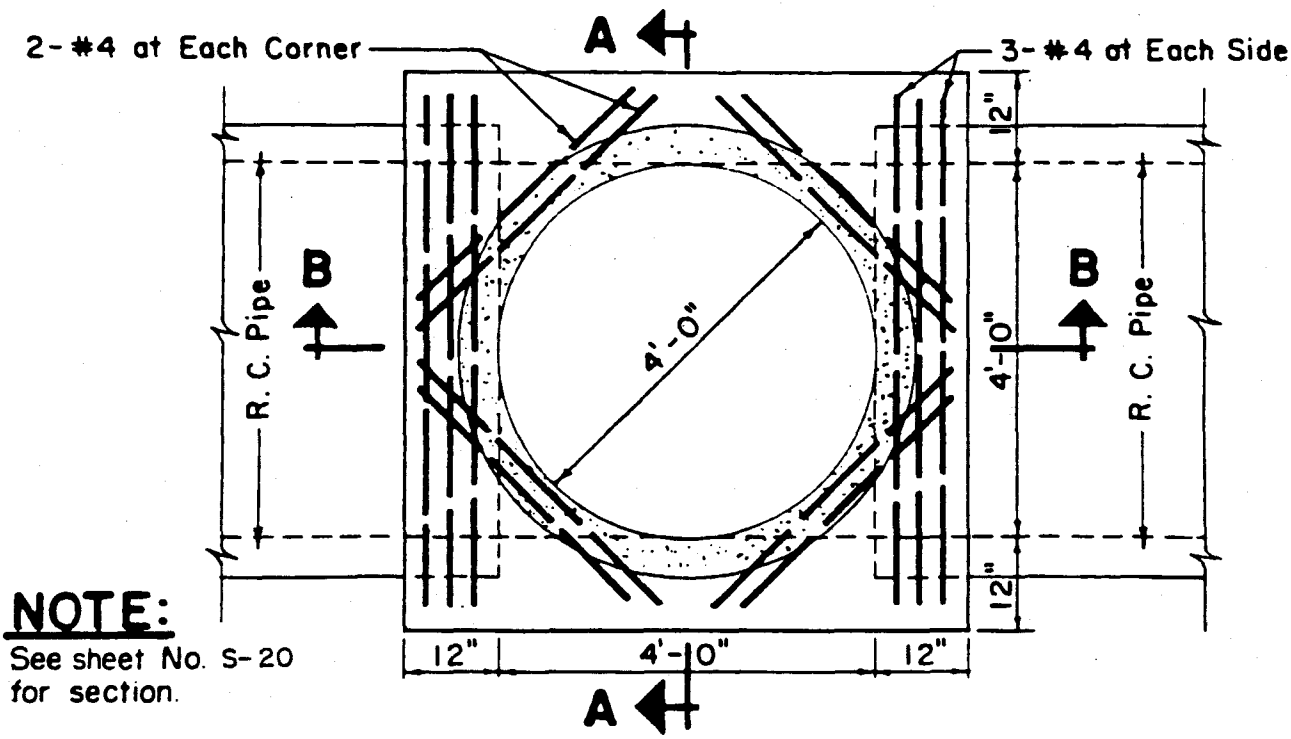

NOTE:
See sheet No. S-20 for section.

PLAN

PLAIN MANHOLE FOR R.C. PIPE (PRE-CAST CONC.) 27" TO 48"

COUNTY OF KAUAI CITY & COUNTY OF HONOLULU COUNTY OF MAUI COUNTY OF HAWAII	PRE-CAST CONCRETE PLAIN MANHOLE FOR 27" TO 48" R.C. PIPE SCALE: 1/2" = 1'-0" SEPTEMBER 1984	STANDARD DETAILS	S-19

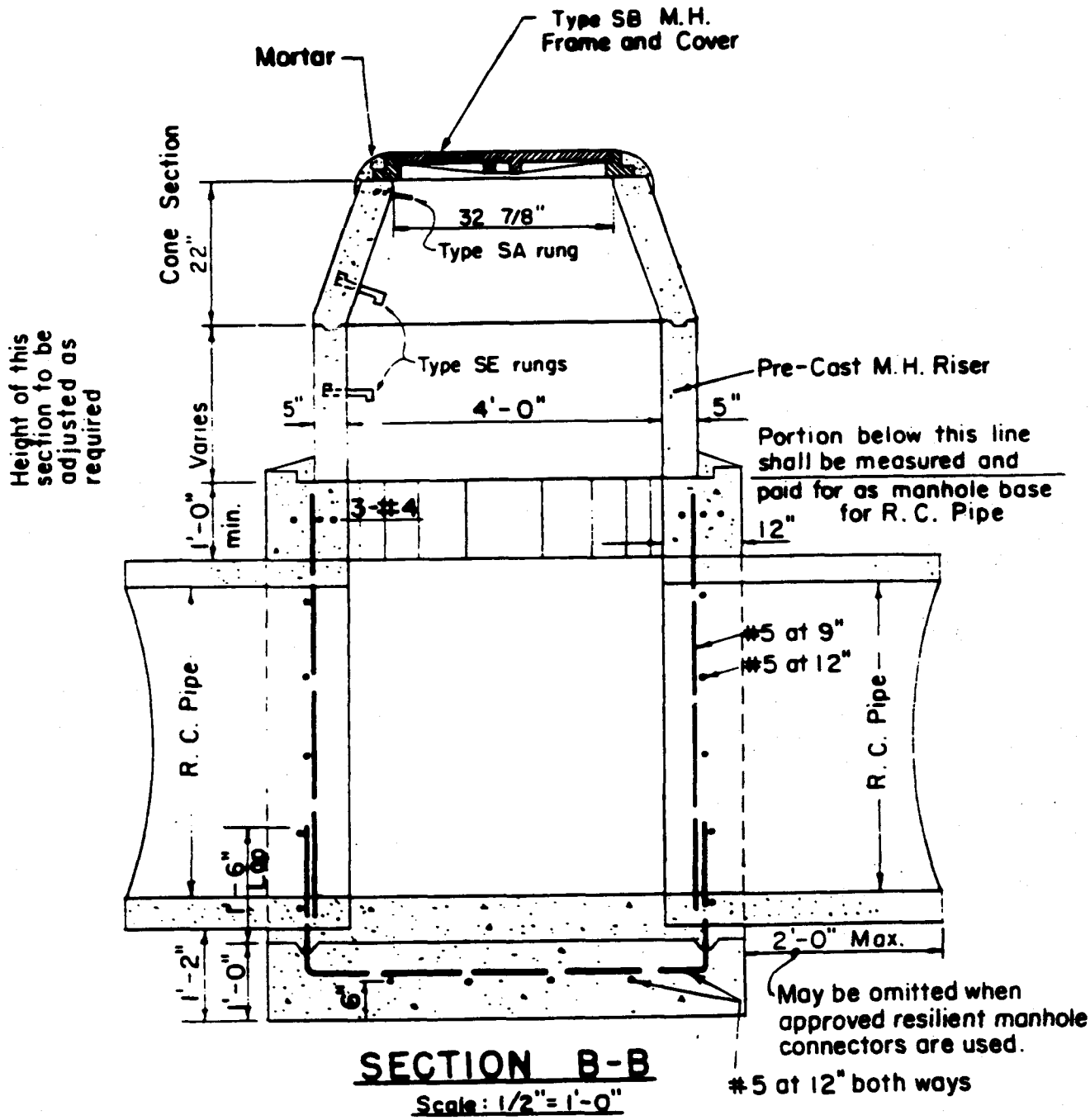

SECTION B-B

Scale: 1/2" = 1'-0"

PLAIN MANHOLE FOR R.C. PIPE

(PRE-CAST CONCRETE)

27" TO 48" DIA. INCLUSIVE

S-20	STANDARD DETAILS	PRE-CAST CONCRETE PLAIN MANHOLE FOR 27" TO 48" R.C. PIPE - SECTION SEPTEMBER 1984 SCALE: 1/2" = 1'-0"	COUNTY OF KAUAI CITY & COUNTY OF HONOLULU COUNTY OF MAUI COUNTY OF HAWAII

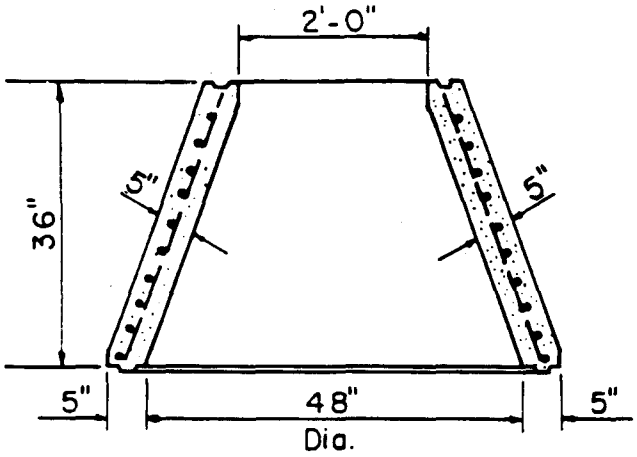

36" CONE

SCALE: 1/2" = 1'-0"

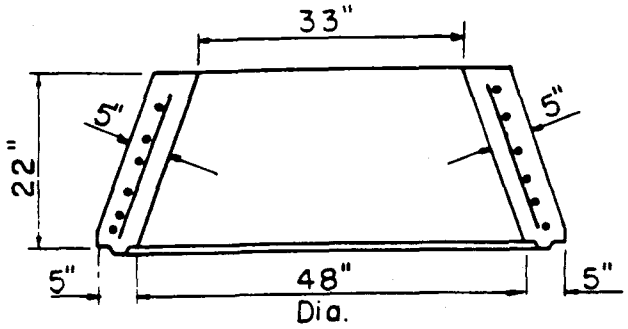

22" CONE

SCALE: 1/2" = 1'-0"

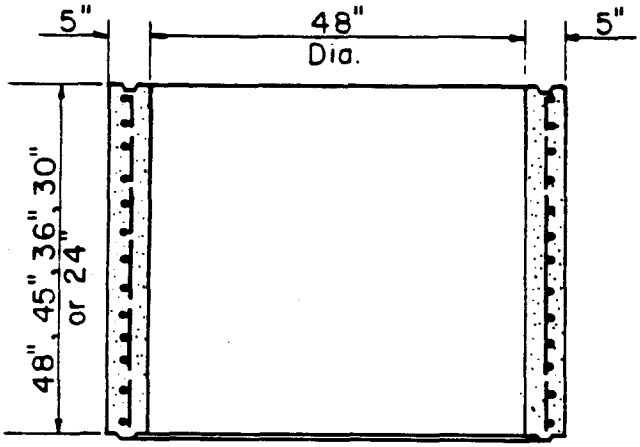

RISER

SCALE: 1/2" = 1'-0"

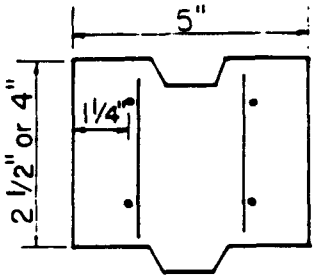

GRADE RING

SCALE: 3" = 1'-0"

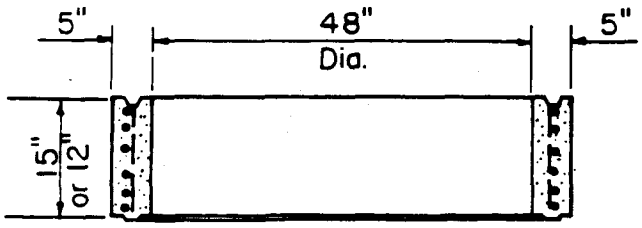

RISER

SCALE: 1/2" = 1'-0"

SECTION	A_s/L.F.
48" x 48" Riser	0.15
48" x 45" Riser	0.15
48" x 36" Riser	0.15
48" x 30" Riser	0.15
48" x 24" Riser	0.15
48" x 15" Riser	0.15
48" x 12" Riser	0.15
48" x 24" x 36" Cone	0.16
48" x 33" x 22" Cone	0.16
22" x 4" Grade Ring	0.12
22" x 2 1/2" Grade Ring	0.12

NOTES

1. Pre-cast sections shall conform to ASTM C478
2. Manufacturers may submit to the Engineer for approval, prior to manufacturing, designs other than those shown on this sheet.

COUNTY OF KAUAI CITY & COUNTY OF HONOLULU COUNTY OF MAUI COUNTY OF HAWAII	PRE-CAST CONCRETE MANHOLE WALL SCALE: AS NOTED SEPTEMBER 1984	STANDARD DETAILS	S-21

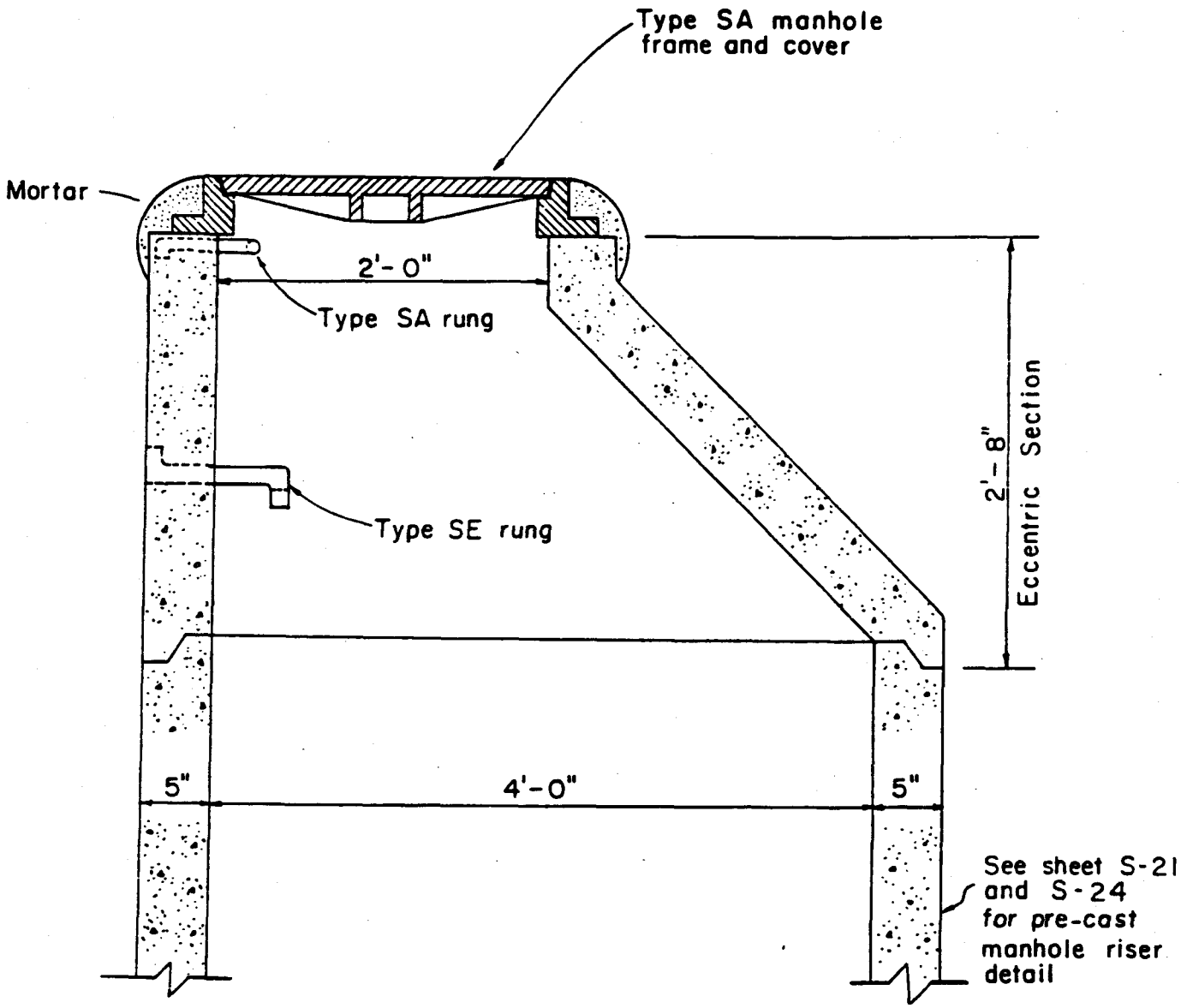

Scale: 1" = 1'-0"

S-22	STANDARD DETAILS	PRE-CAST CONCRETE ECCENTRIC MANHOLE CONE SEPTEMBER 1984 SCALE: 1" = 1'-0"	COUNTY OF KAUAI COUNTY OF MAUI COUNTY OF HAWAII

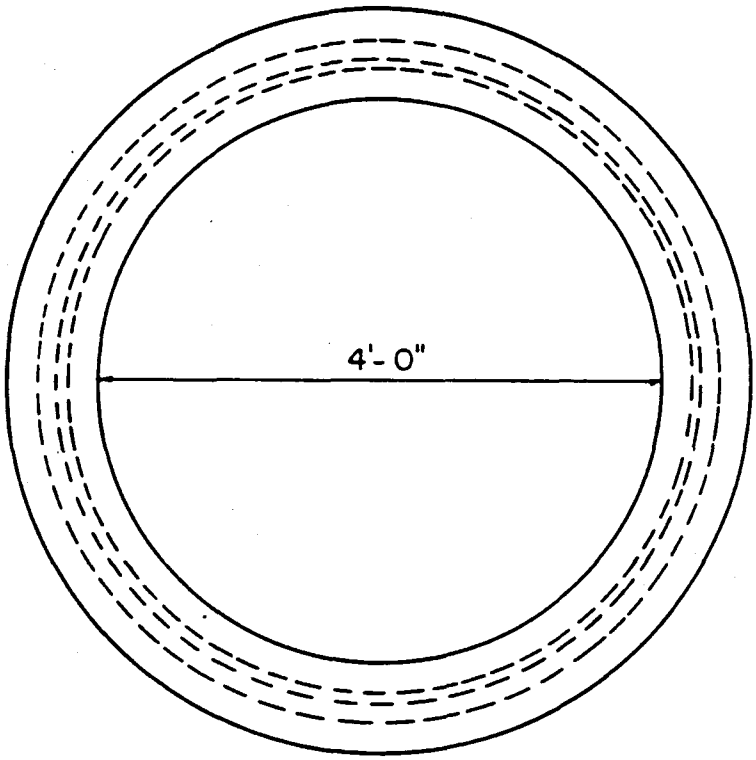

PLAN

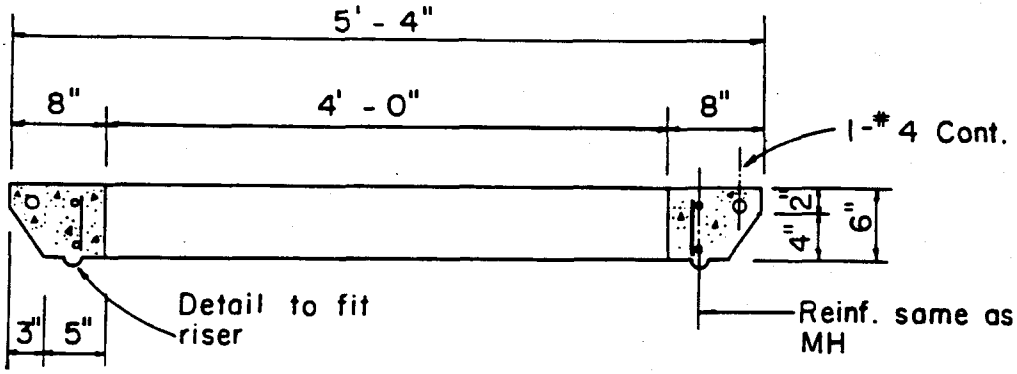

SECTION

Scale: 3/4" = 1'-0"

COUNTY OF KAUAI CITY & COUNTY OF HONOLULU COUNTY OF MAUI COUNTY OF HAWAII	PRE-CAST CONCRETE MANHOLE WALL TO BRICK WALL ADAPTER RING SCALE:3/4" = 1'-0" SEPTEMBER 1984	STANDARD DETAILS	S-23

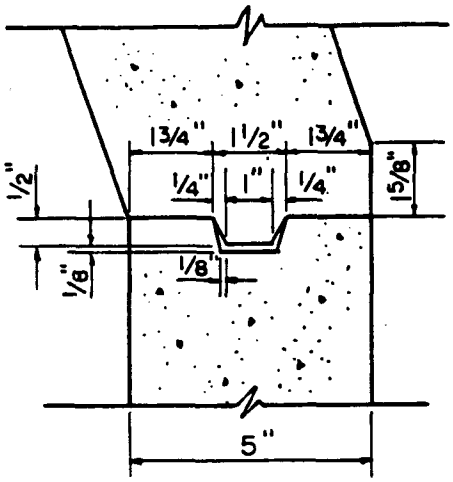

CONE SECTION

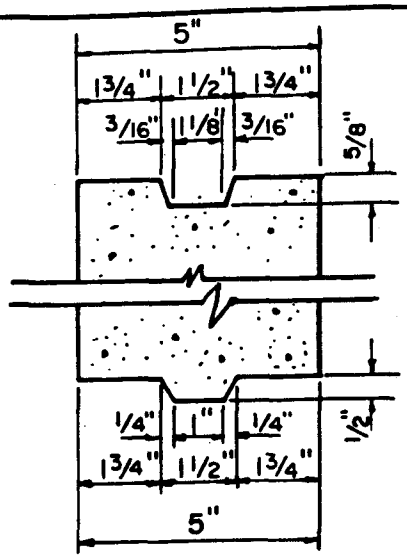

RISER SECTION

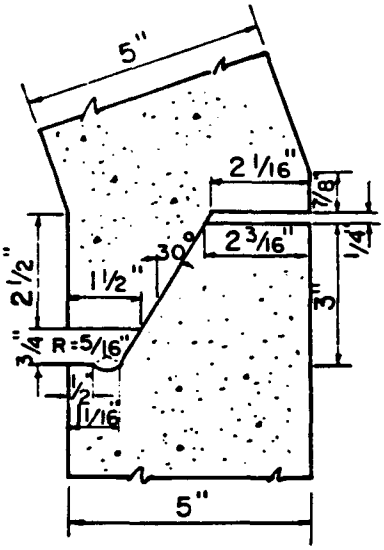

CONE SECTION
(Alternate Detail)

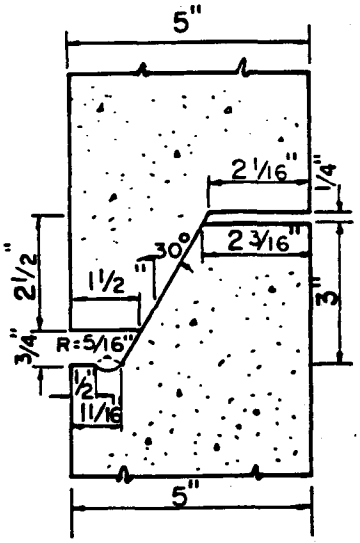

RISER SECTION
(Alternate Detail)

Scale : 3" = 1'-0"

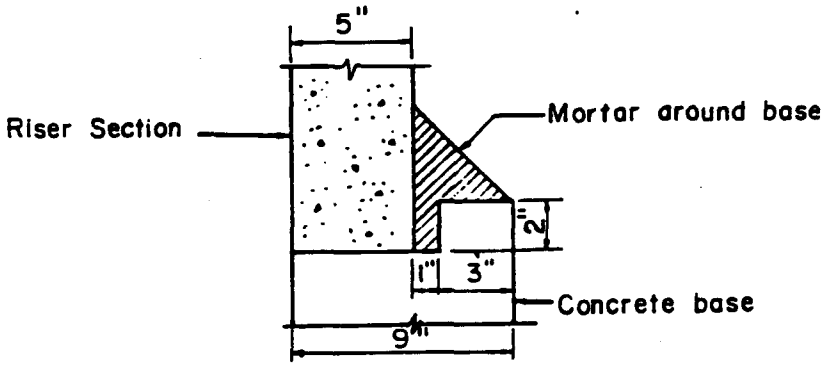

RISER AND MANHOLE BASE JOINT SCALE: 1-1/2" = 1'-0"

S-24	STANDARD DETAILS	PRE-CAST CONCRETE MANHOLE WALL JOINTS SEPTEMBER 1984 SCALE: AS NOTED	COUNTY OF KAUAI CITY & COUNTY OF HONOLULU COUNTY OF MAUI COUNTY OF HAWAII

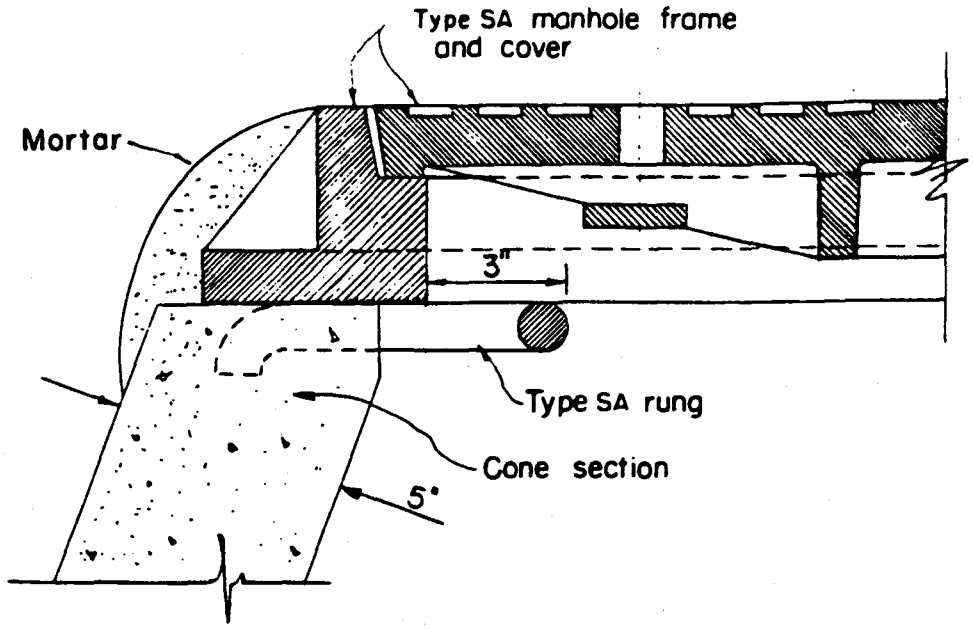

SHOWN WITHOUT GRADE RING

Scale: 3" = 1'-0"

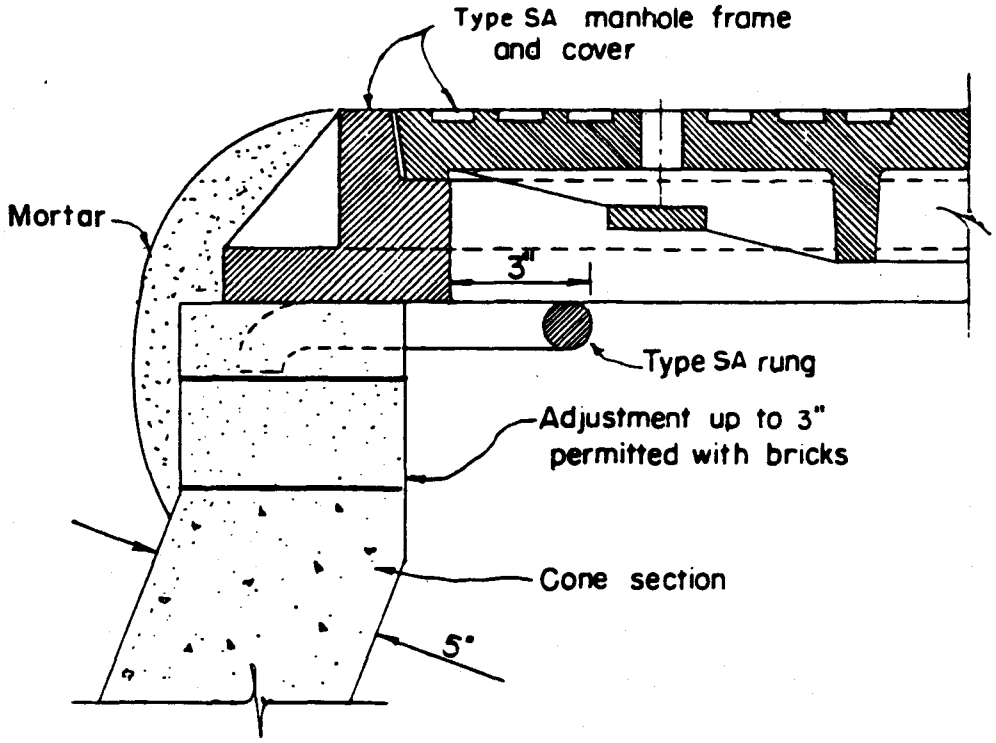

SHOWN WITH GRADE RING

PRE - CAST MANHOLE

DETAIL AT TOP RUNG

COUNTY OF KAUAI CITY & COUNTY OF HONOLULU COUNTY OF MAUI COUNTY OF HAWAII	PRE-CAST CONCRETE MANHOLE - DETAIL AT TOP RUNG SCALE: 3" = 1'-0" SEPTEMBER 1984	STANDARD DETAILS	S-25

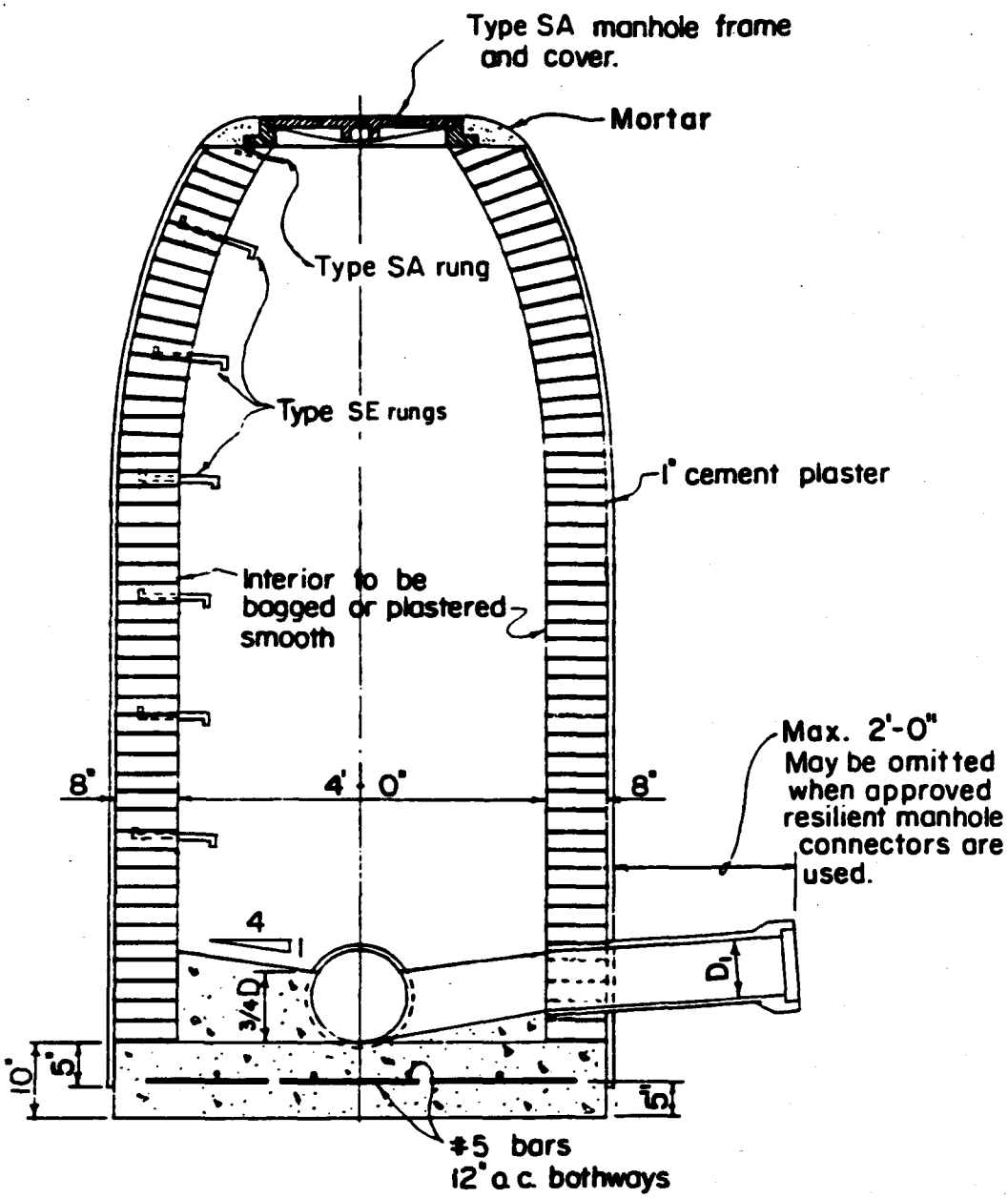

(MAXIMUM HEIGHT - 10.0 FEET)

PLAIN MANHOLE (BRICK)

Scale: 1/2" = 1' - 0"

S-26	STANDARD DETAILS	BRICK MANHOLE SEPTEMBER 1984 SCALE: 1/2" = 1'-0"	COUNTY OF KAUAI CITY & COUNTY OF HONOLULU COUNTY OF MAUI COUNTY OF HAWAII

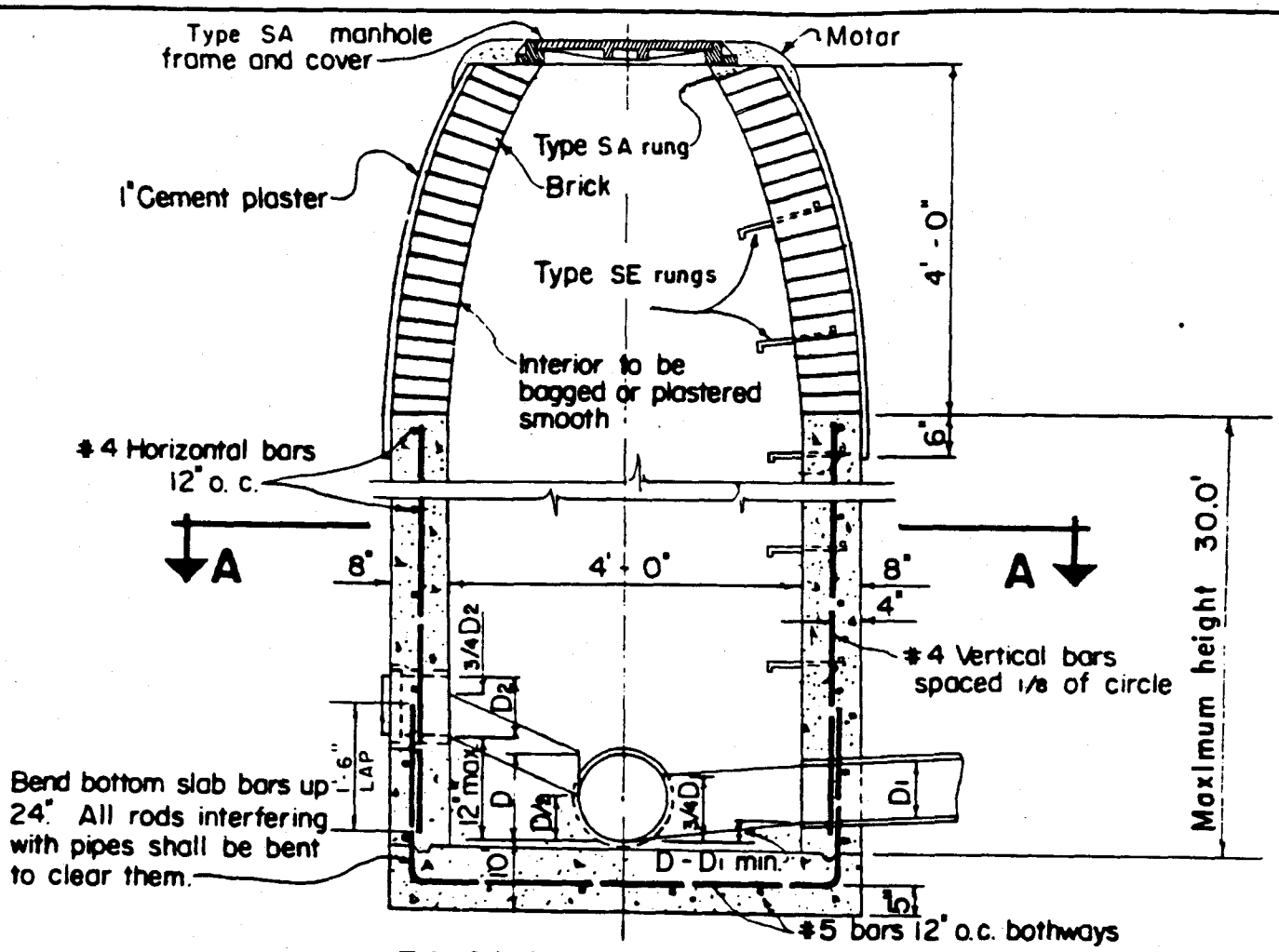

PLAIN MANHOLE (CAST-IN-PLACE)

Scale: 1/2" = 1'-0"

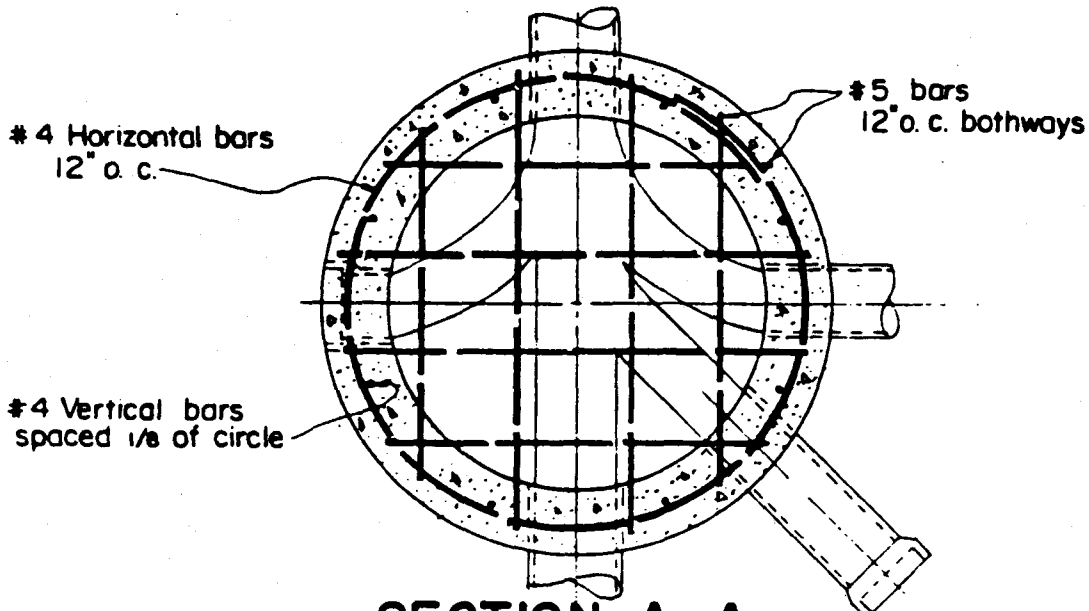

SECTION A-A

Scale: 1/2" = 1'-0"

COUNTY OF KAUAI CITY & COUNTY OF HONOLULU COUNTY OF MAUI COUNTY OF HAWAII	PLAIN MANHOLE SCALE: 1/2" = 1'-0" SEPTEMBER 1984	STANDARD DETAILS	S-27

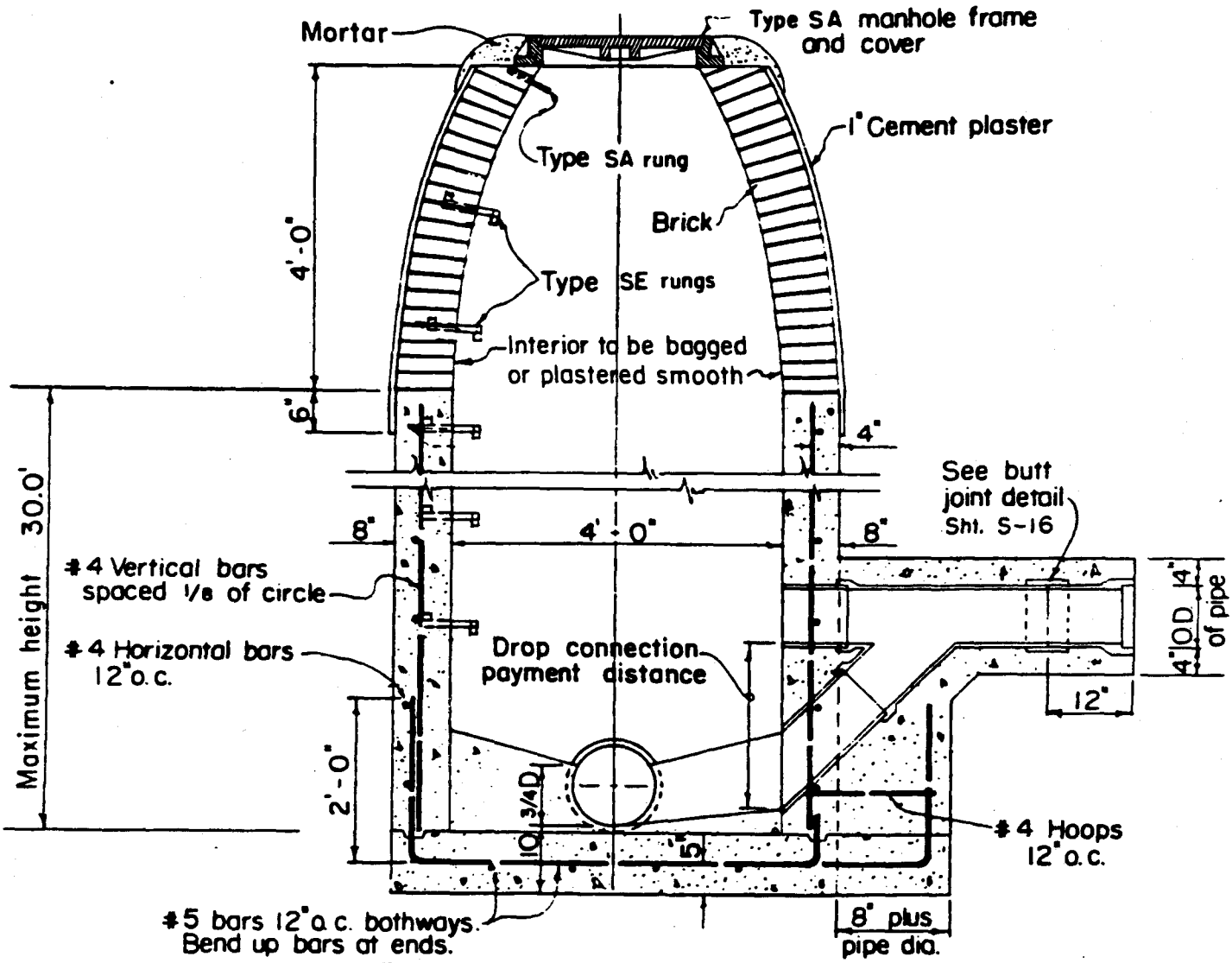

FOR DROPS UNDER 5.0 FEET

(SHALLOW) DROP MANHOLE (CAST-IN-PLACE)

Scale: 1/2" = 1'-0"

NOTES:

Manhole wall to be of reinforced concrete to height 1' above normal ground water table.

S-28	STANDARD DETAILS	SHALLOW DROP MANHOLE SEPTEMBER 1984 SCALE: 1/2" = 1'-0"	COUNTY OF KAUAI CITY & COUNTY OF HONOLULU COUNTY OF MAUI COUNTY OF HAWAII

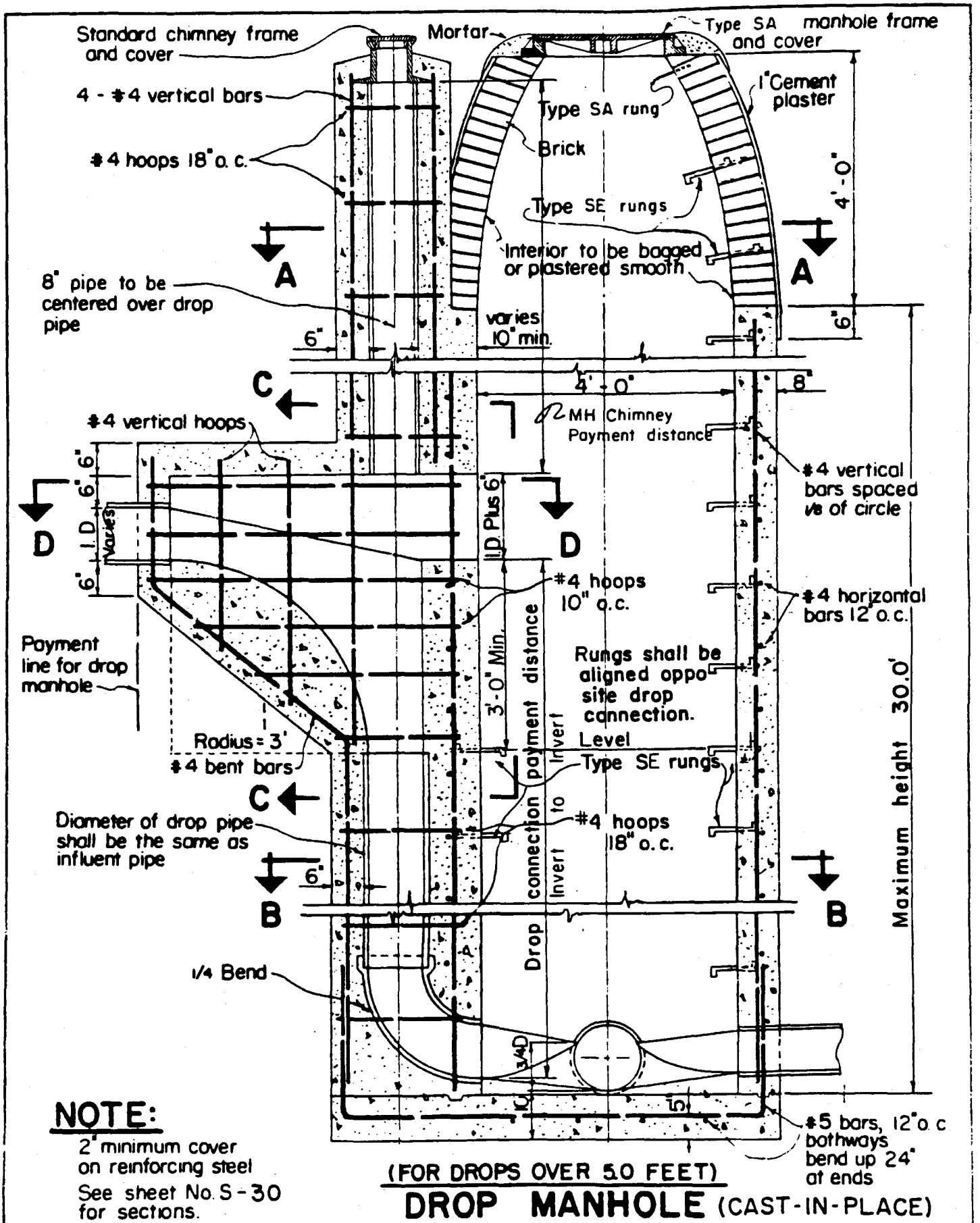

NOTE:

2" minimum cover on reinforcing steel

See sheet No. S-30 for sections.

(FOR DROPS OVER 5.0 FEET)

DROP MANHOLE (CAST-IN-PLACE)

COUNTY OF KAUAI CITY & COUNTY OF HONOLULU COUNTY OF MAUI COUNTY OF HAWAII	DROP MANHOLE SCALE: 1/2" = 1'-0" SEPTEMBER 1984	STANDARD DETAILS	S-29

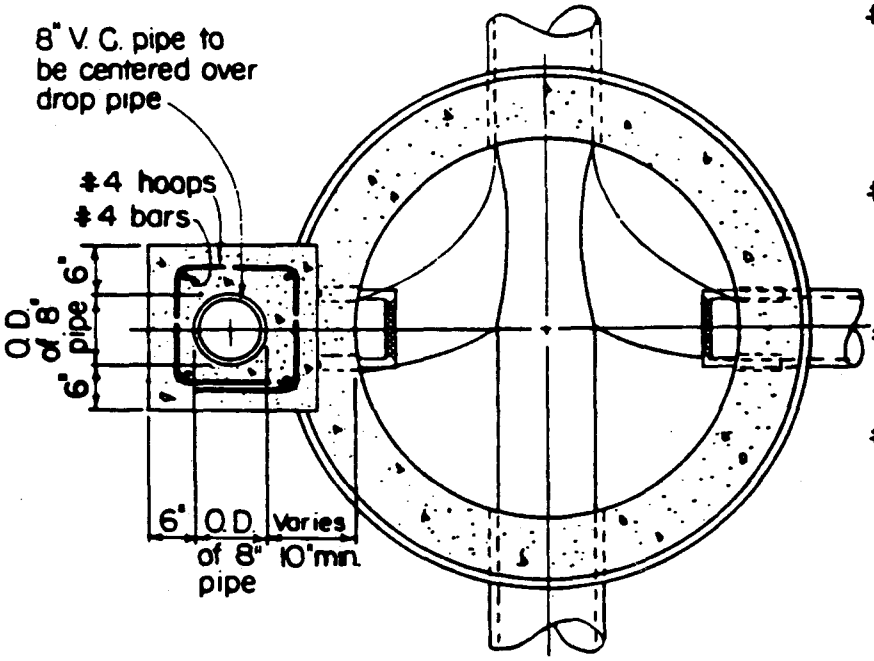

SECTION A-A

Scale: 1/2" = 1'-0"

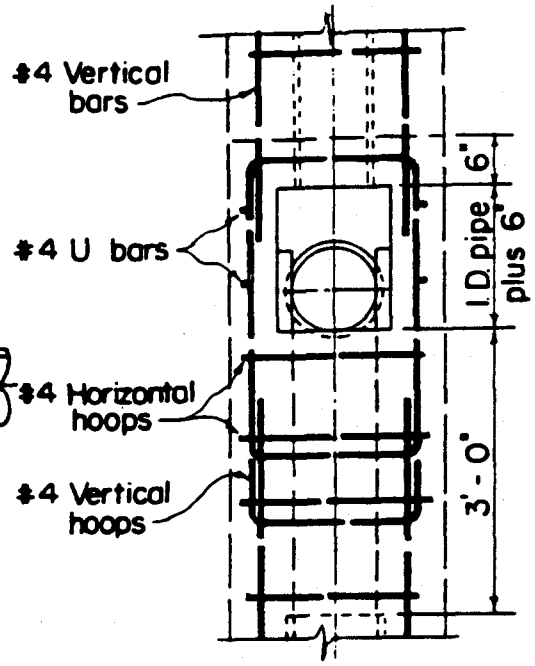

SECTION C-C

Scale: 1/2" = 1'-0"

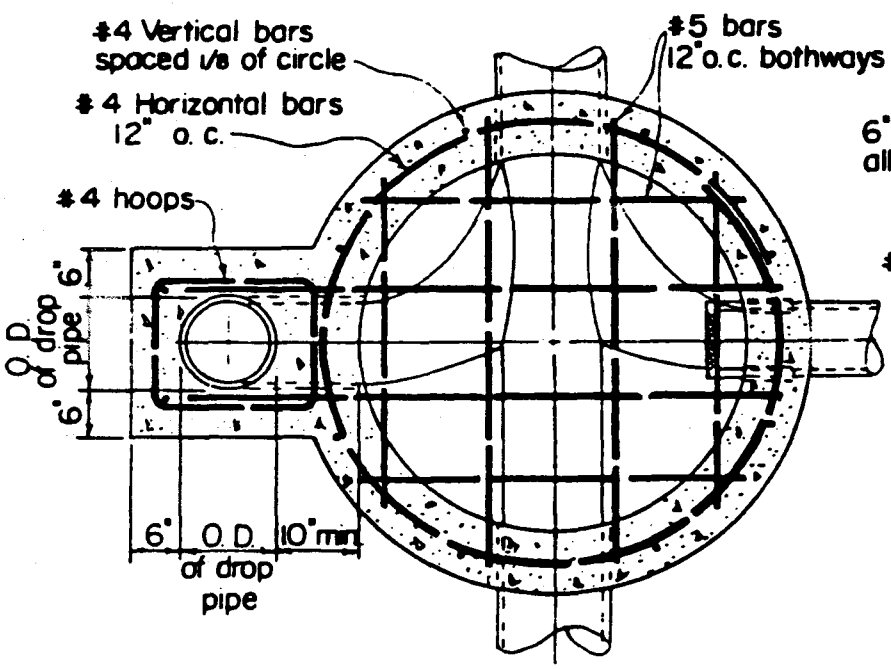

SECTION B-B

Scale: 1/2" = 1'-0"

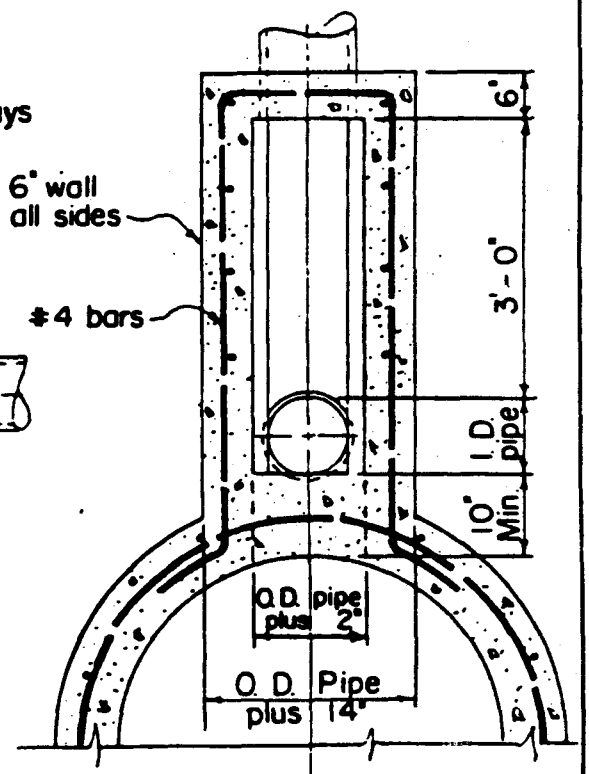

SECTION D-D

Scale: 1/2" = 1'-0"

DROP MANHOLE

S-30	STANDARD DETAILS	DROP MANHOLE - SECTIONS SEPTEMBER 1984 SCALE: 1/2" = 1'-0"	COUNTY OF KAUAI CITY & COUNTY OF HONOLULU COUNTY OF MAUI COUNTY OF HAWAII

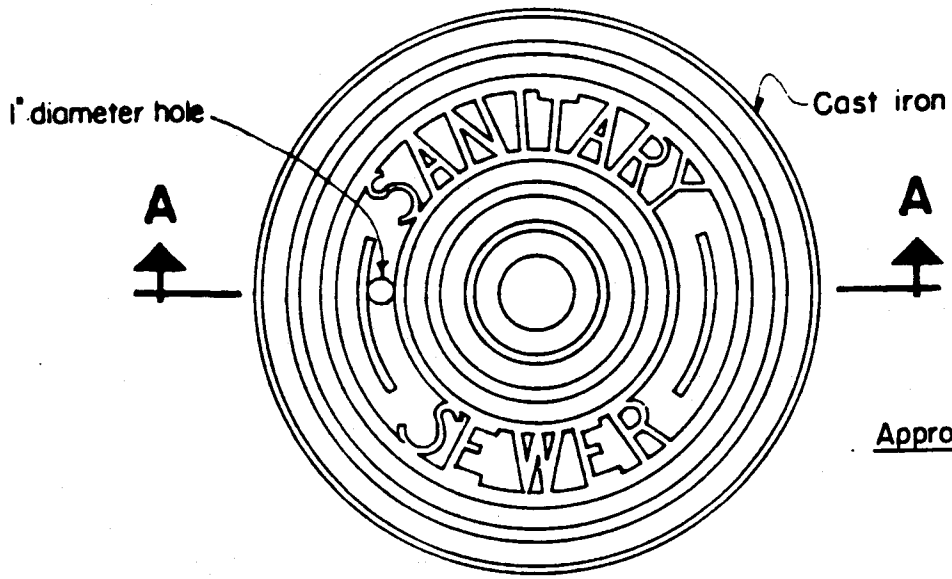

Approx. weight 158 pounds

PLAN OF MANHOLE COVER

Scale: 1 1/2" = 1' - 0"

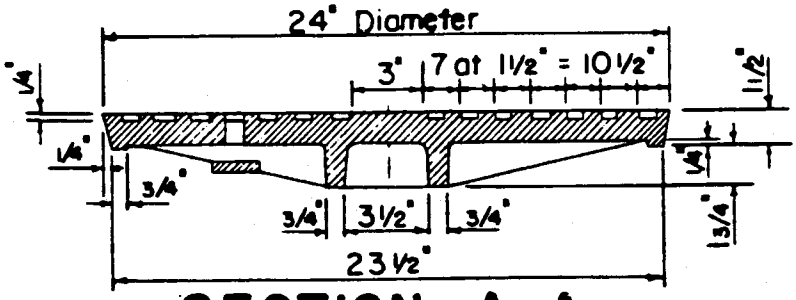

SECTION A-A

Scale: 1 1/2" = 1' - 0"

NOTE:

This cover is used with the SA or SD frame.

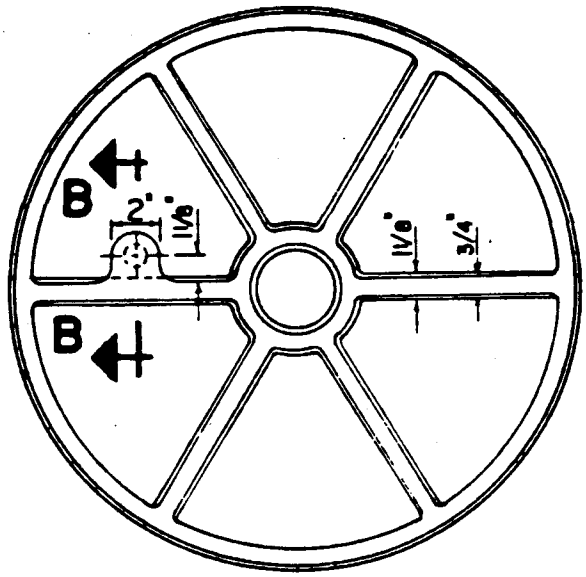

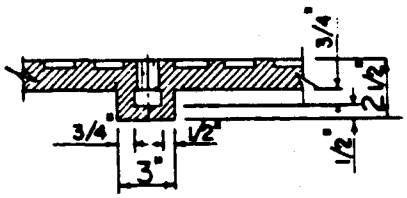

SECTION B-B

BOTTOM VIEW OF COVER

Scale: 1 1/2" = 1' - 0"

COUNTY OF KAUAI CITY & COUNTY OF HONOLULU COUNTY OF MAUI COUNTY OF HAWAII	MANHOLE COVER - TYPE SA SCALE: 1-1/2" = 1'-0" SEPTEMBER 1984	STANDARD DETAILS	S-31

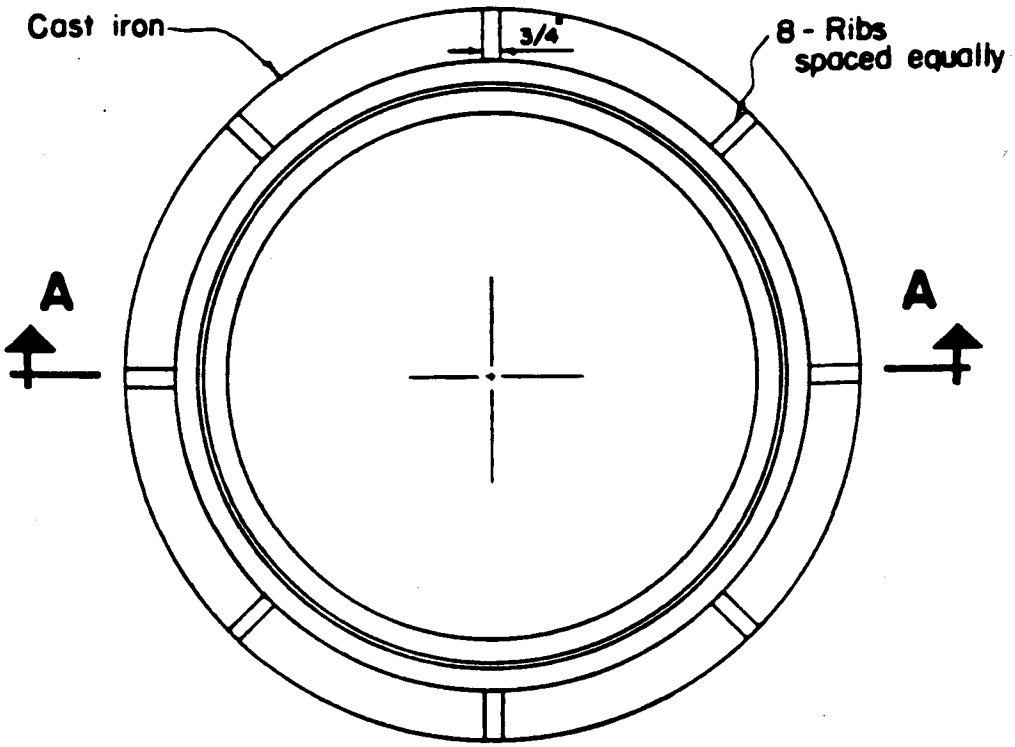

PLAN OF MANHOLE FRAME

Scale: 1 1/2" = 1'-0"

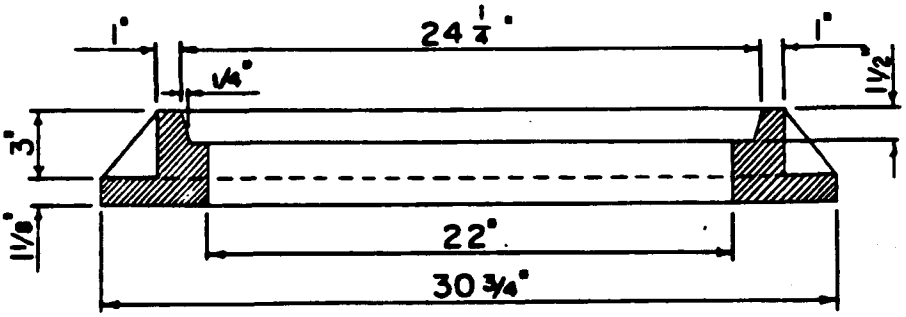

SECTION A - A

Scale: 1 1/2" = 1'-0"

Approx. weight 156 pounds

S-32	STANDARD DETAILS	MANHOLE FRAME - TYPE SA SEPTEMBER 1984 SCALE: 1-1/2" = 1'-0"	COUNTY OF KAUAI CITY & COUNTY OF HONOLULU COUNTY OF MAUI COUNTY OF HAWAII

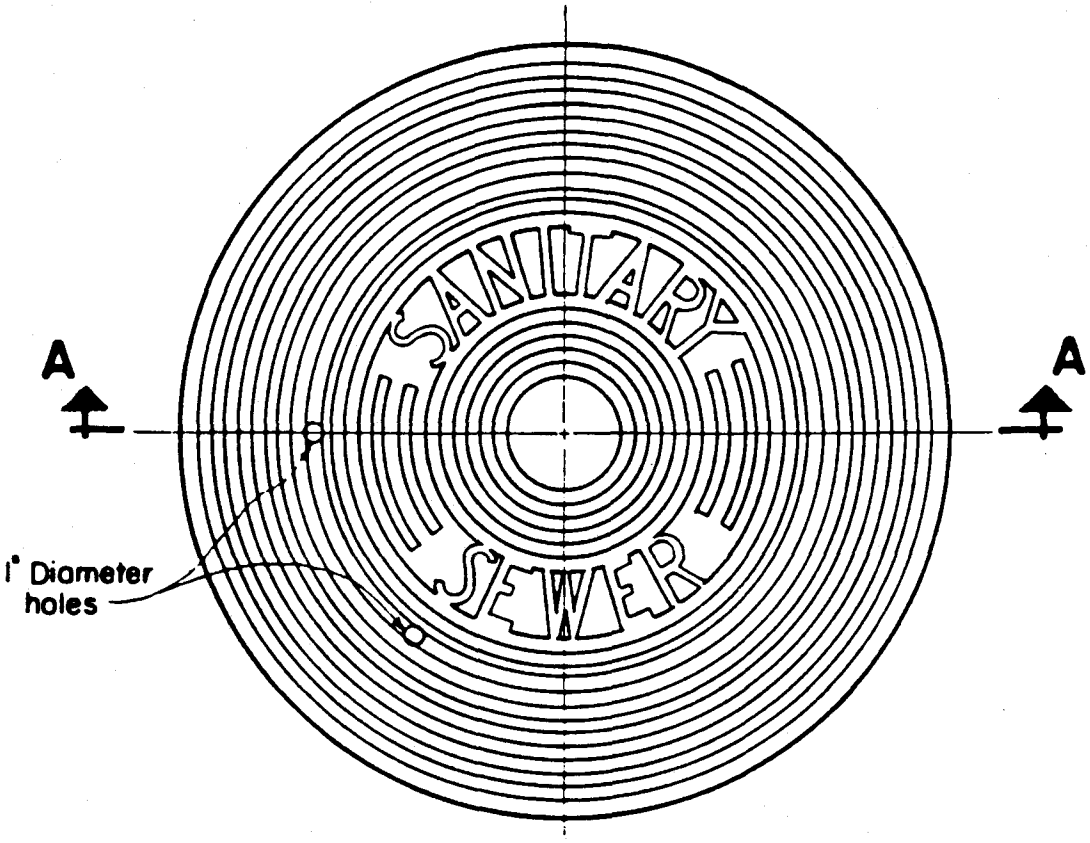

PLAN
SPECIAL MANHOLE COVER

Scale: 1 1/2" = 1'-0"

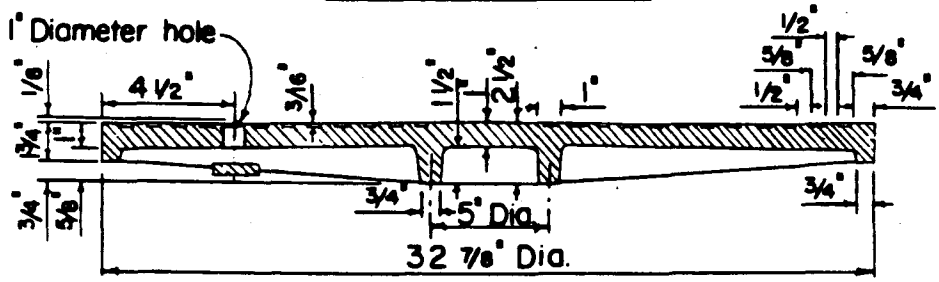

SECTION A - A

Scale: 1 1/2" = 1'-0"

Approx. Weight 260 Pounds

COUNTY OF KAUAI CITY & COUNTY OF HONOLULU COUNTY OF MAUI COUNTY OF HAWAII	MANHOLE COVER - TYPE SB, TOP VIEW SCALE: 1-1/2" = 1'-0" SEPTEMBER 1984	STANDARD DETAILS	S-33

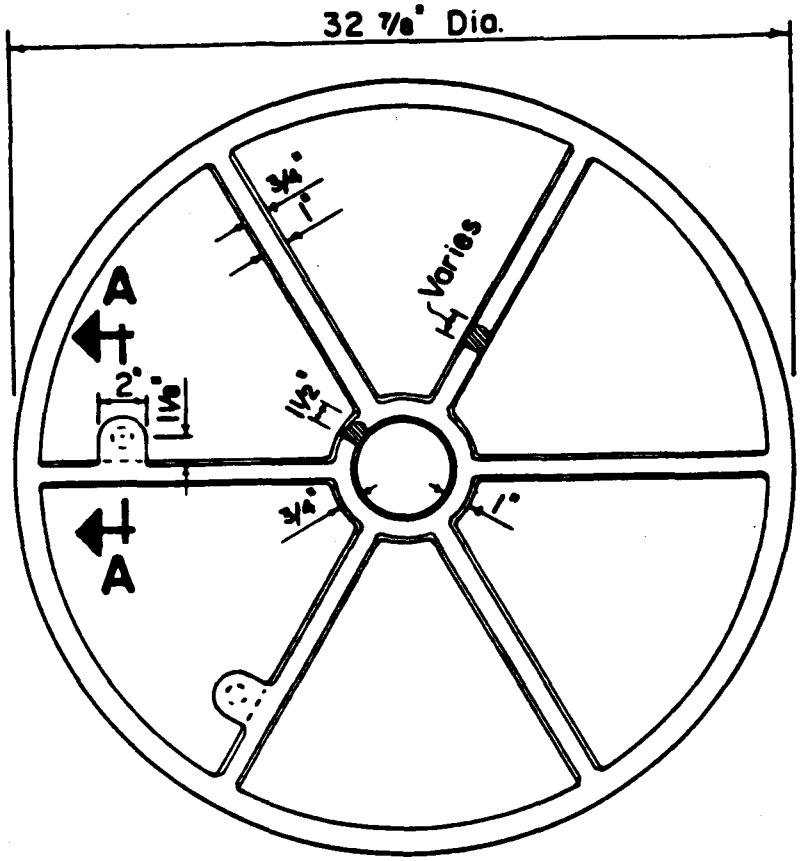

BOTTOM VIEW OF COVER

Scale: 1 1/2" = 1' - 0"

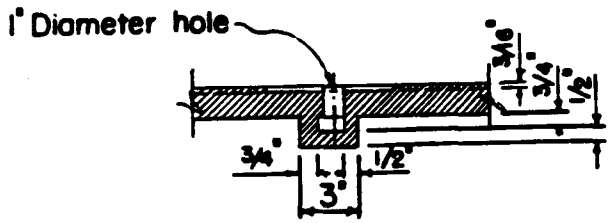

SECTION A - A

Scale: 1 1/2" = 1' - 0"

S-34	STANDARD DETAILS	MANHOLE COVER - TYPE SB, BOTTOM VIEW SEPTEMBER 1984 SCALE: 1-1/2" = 1'-0"	COUNTY OF KAUAI CITY & COUNTY OF HONOLULU COUNTY OF MAUI COUNTY OF HAWAII

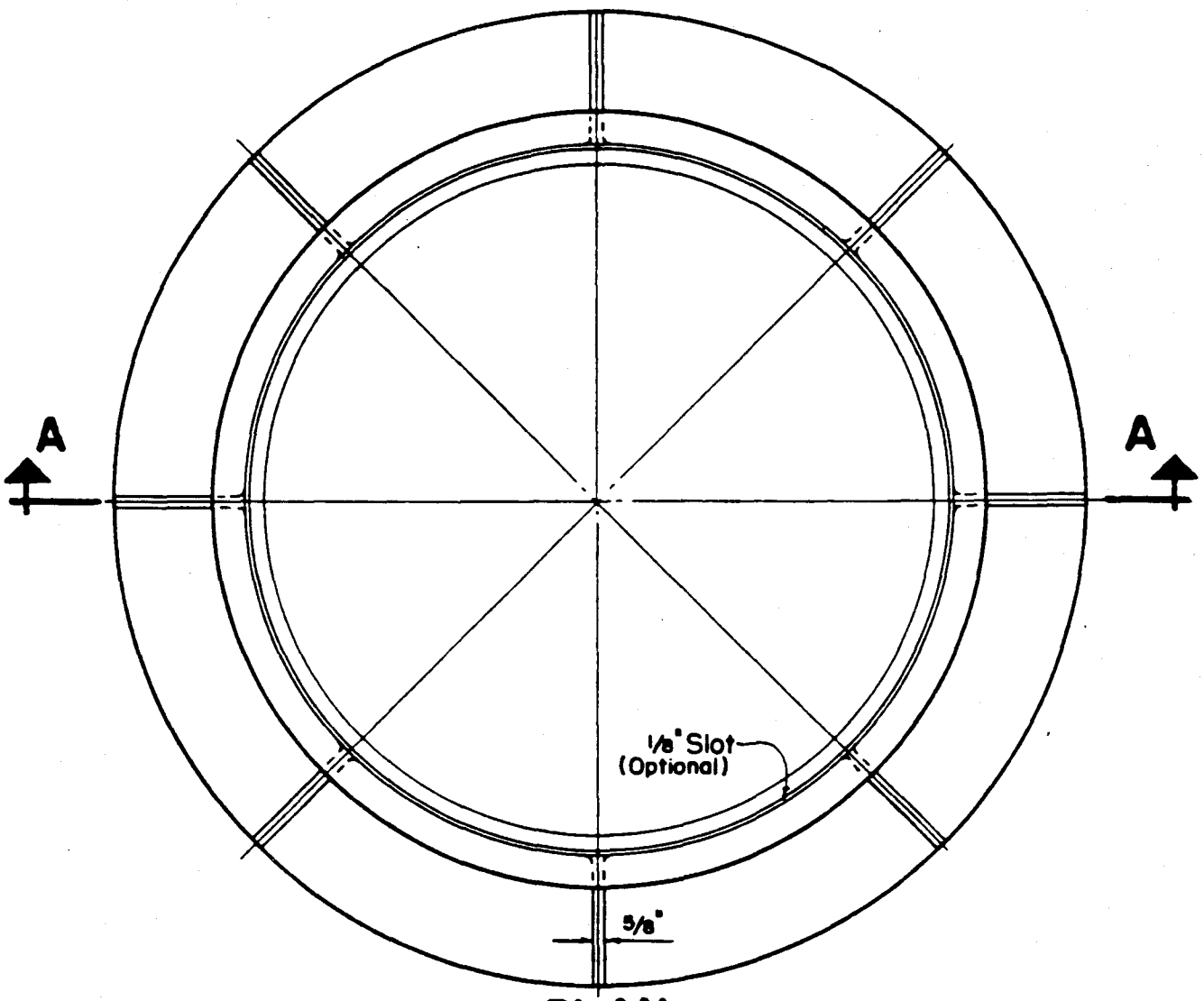

PLAN
SPECIAL MANHOLE FRAME

Scale: 1 1/2" = 1'-0"

Approx. Weight 480 Pounds

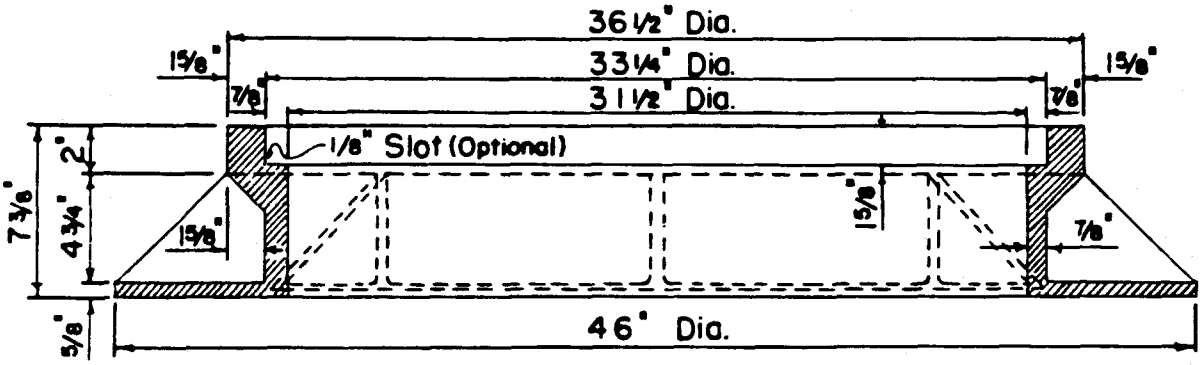

SECTION A-A

COUNTY OF KAUAI CITY & COUNTY OF HONOLULU COUNTY OF MAUI COUNTY OF HAWAII	MANHOLE FRAME - TYPE SB SCALE: 1-1/2" = 1'-0" SEPTEMBER 1984	STANDARD DETAILS	S-35

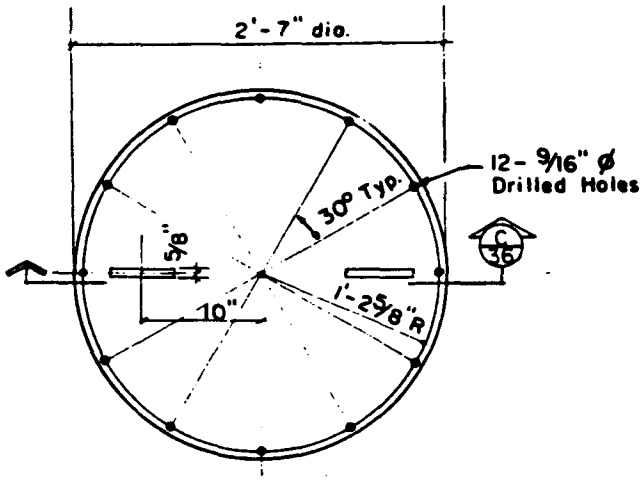

5/8" C.I. PRESSURE PLATE COVER

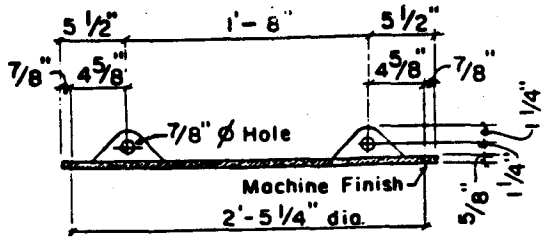

SECTION C/36

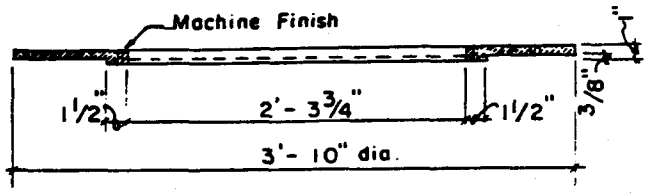

SECTION B/36

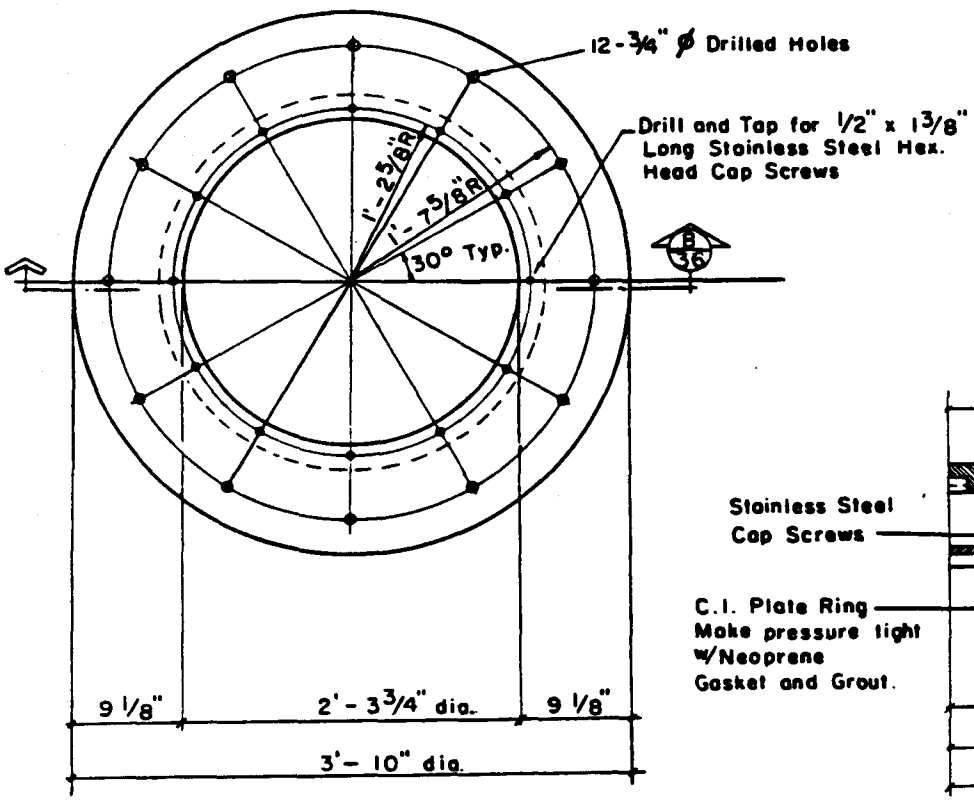

C.I. PRESSURE PLATE COVER RING

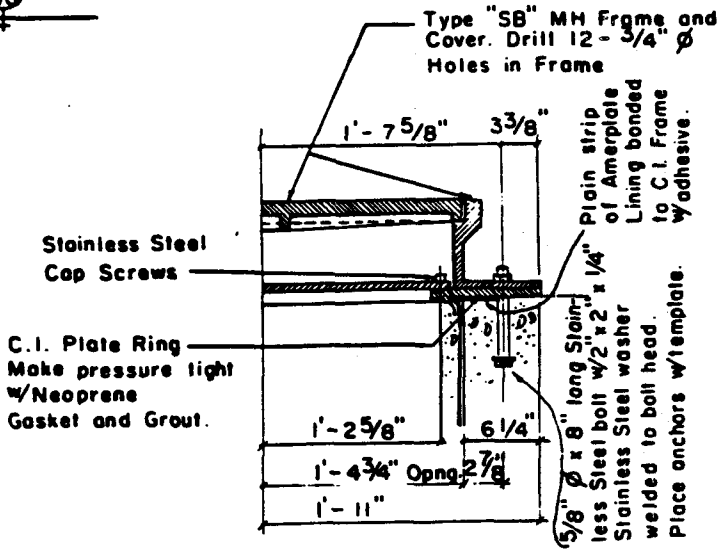

HALF SECTION-MODIFIED
TYPE "SB" MH FRAME & COVER

S-36	STANDARD DETAILS	MODIFIED TYPE SB PRESSURE MANHOLE FRAME AND COVER SEPTEMBER 1984 SCALE: 3/4" = 1'-0"	COUNTY OF KAUAI CITY & COUNTY OF HONOLULU COUNTY OF MAUI COUNTY OF HAWAII

COUNTY OF KAUAI
CITY & COUNTY OF HONOLULU
COUNTY OF MAUI
COUNTY OF HAWAII

NOT TO SCALE

PRESSURE MANHOLE COVER - TYPE SC

SEPTEMBER 1984

STANDARD DETAILS

S-37

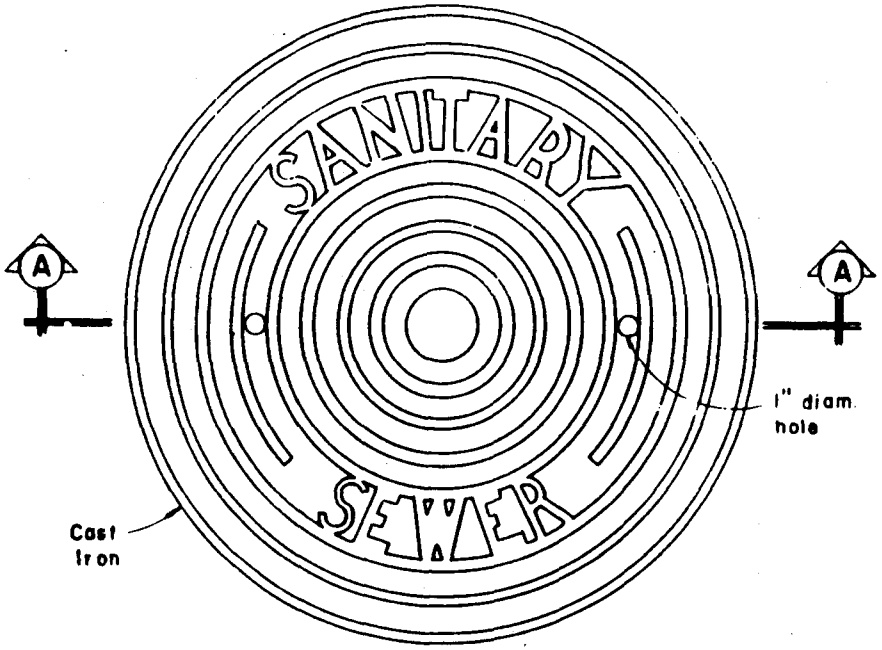

PLAN OF PRESSURE MANHOLE COVER

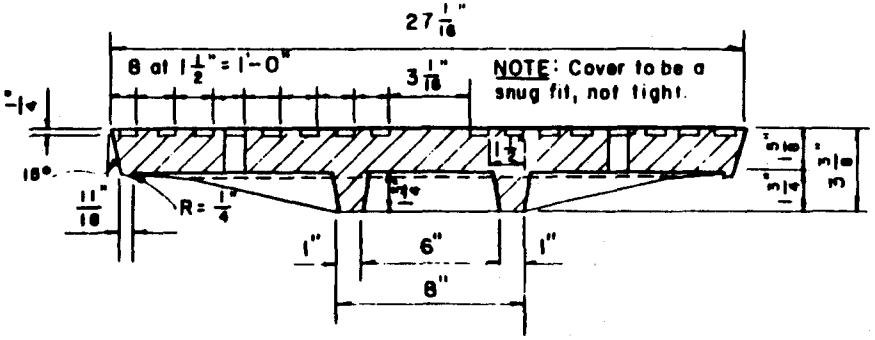

SECTION A-A

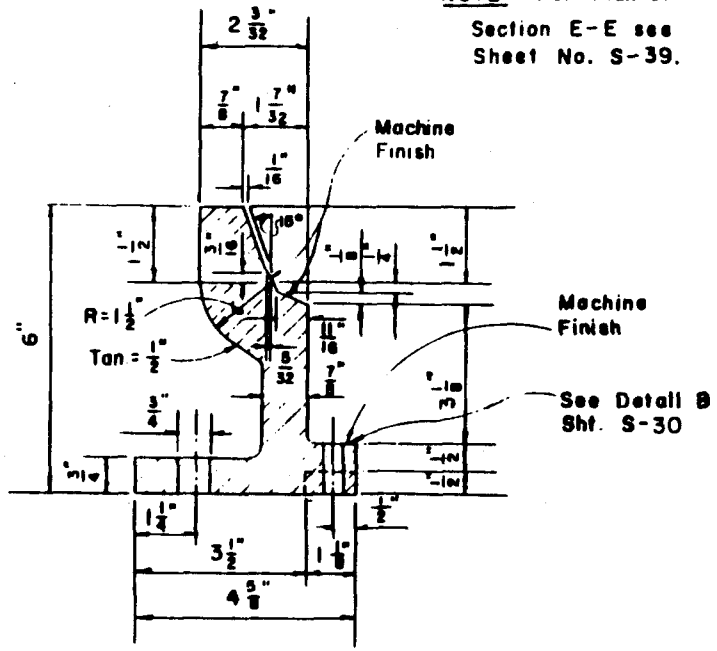

SECTION E-E

NOTES:

1. Gaskets shall be from $\frac{1}{16}$ inch thick Crandall No. 1906 or Garlock No. 19.
2. The Pressue Plate and Cap Screws shall be stainless steel ASTM Designation A 240 or A 167, AISI type 318 or 321.
3. Anchor Bolts shall be Silicon Bronze ASTM Designation B 98-52.
4. All parts of the manhole frame and cover and the pressure plate shall be coated with Inertol No. 49.
5. Maximum Allowable Pressure - 25' Head of water

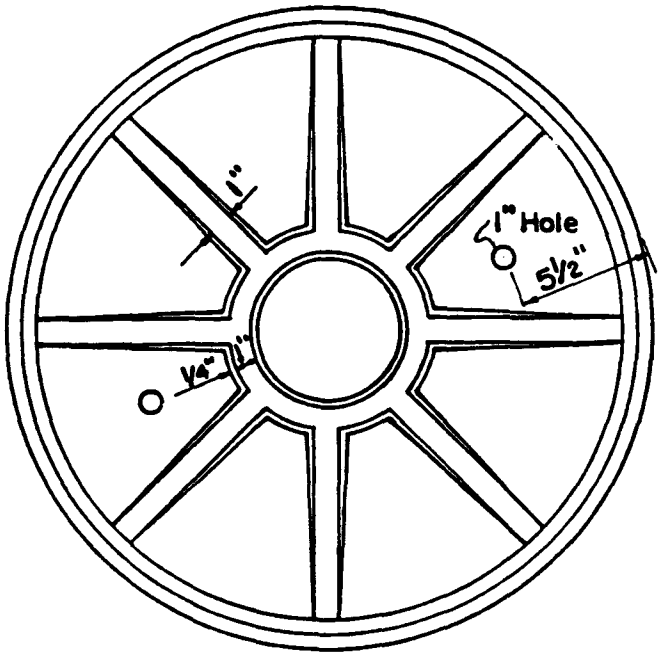

BOTTOM VIEW OF PRESSURE MANHOLE COVER

Not to Scale

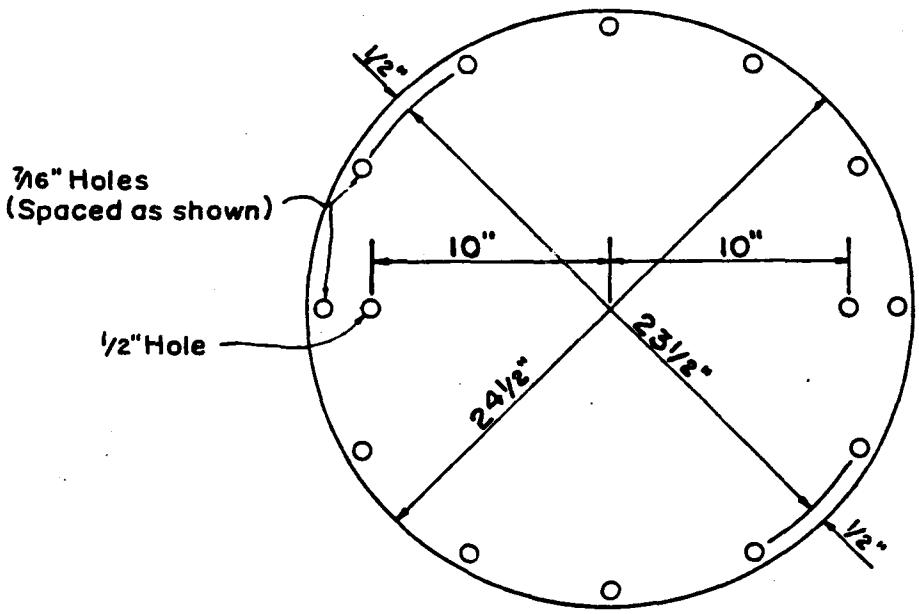

PLAN OF PRESSURE PLATE

Not to Scale

S-38	STANDARD DETAILS	PRESSURE MANHOLE COVER - TYPE SC SEPTEMBER 1984 NOT TO SCALE	COUNTY OF KAUAI CITY & COUNTY OF HONOLULU COUNTY OF MAUI COUNTY OF HAWAII

NOTE:

For details of Section E-E see Sheet No. S-37

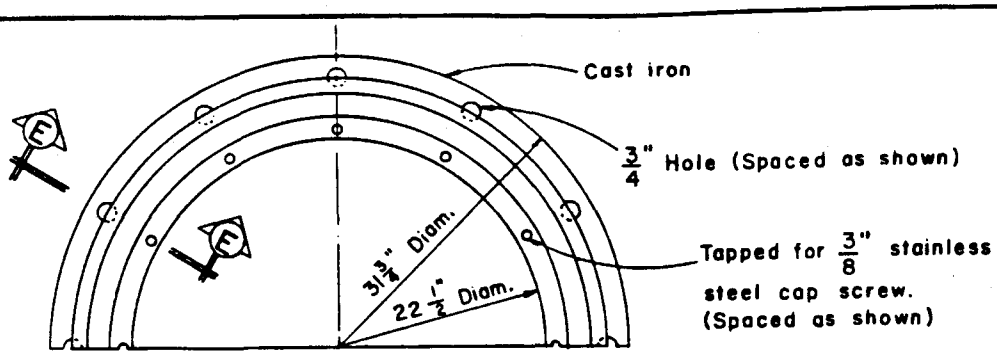

HALF PLAN—MANHOLE FRAME

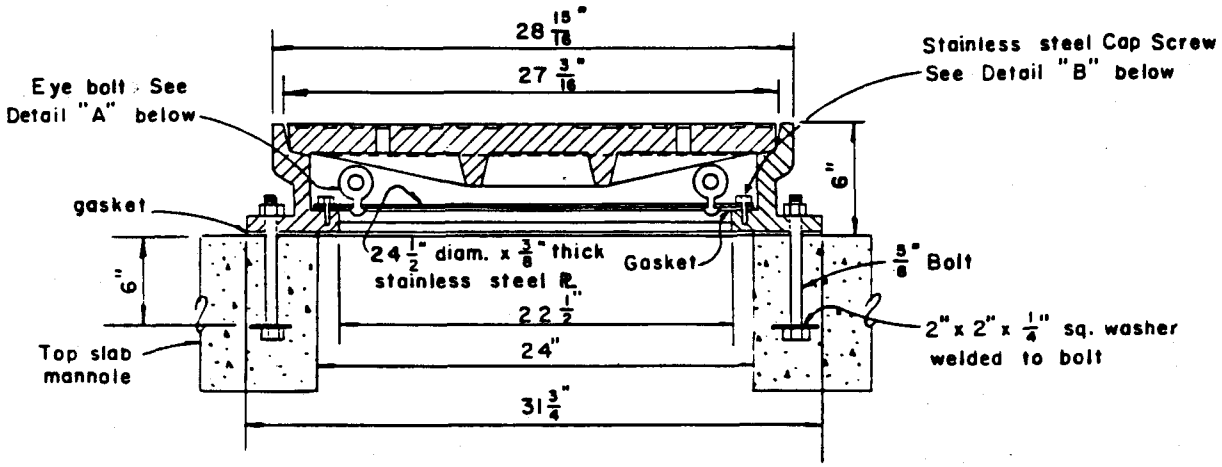

SECTION—MANHOLE FRAME & COVER

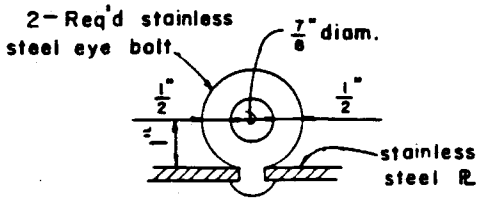

DETAIL "A"

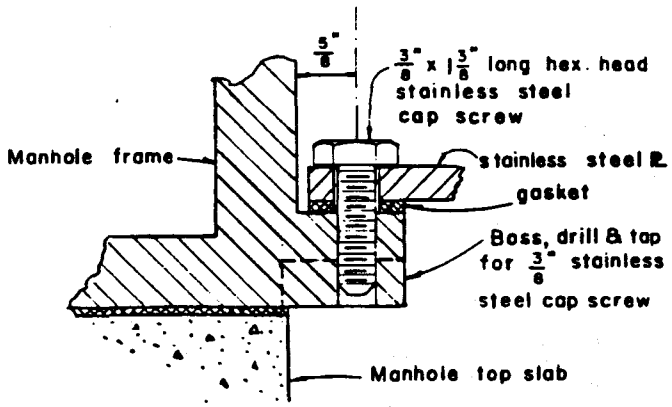

DETAIL "B"

PRESSURE MANHOLE FRAME & COVER

COUNTY OF KAUAI CITY & COUNTY OF HONOLULU COUNTY OF MAUI COUNTY OF HAWAII	PRESSURE MANHOLE FRAME AND COVER - TYPE SC NOT TO SCALE SEPTEMBER 1984	STANDARD DETAILS	S-39

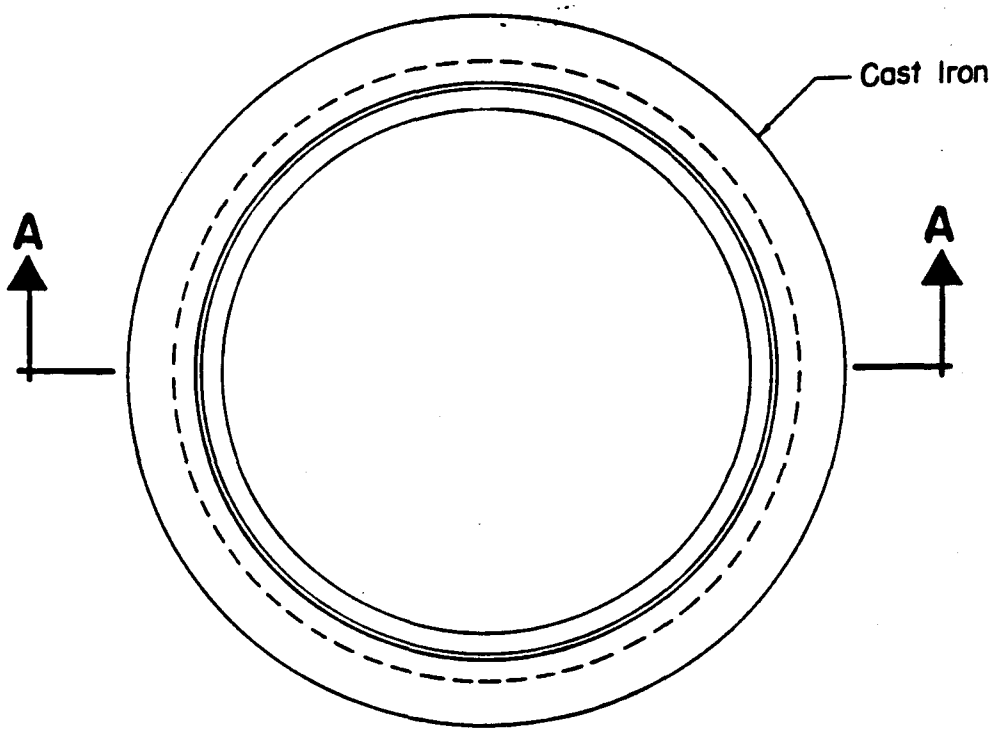

PLAN

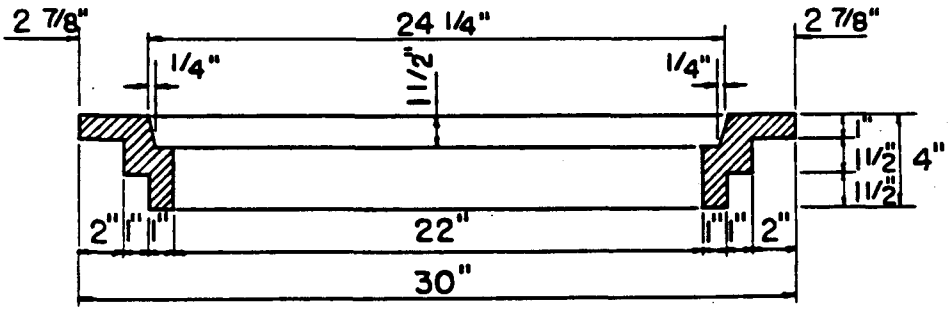

SECTION A-A

TYPE SD FRAME

Scale: 1 1/2" = 1'-0"

NOTE:

Type SA Cover is used with this frame.

Approx. weight 156 pounds

S-40	STANDARD DETAILS	MANHOLE FRAME - TYPE SD SEPTEMBER 1984 SCALE: 1-1/2" = 1'-0"	COUNTY OF KAUAI CITY & COUNTY OF HONOLULU COUNTY OF MAUI COUNTY OF HAWAII

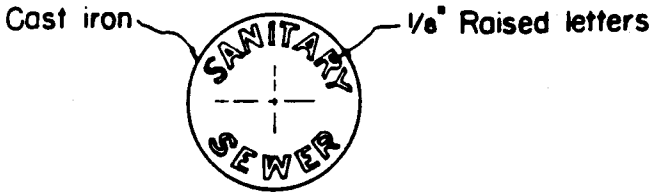

PLAN OF COVER

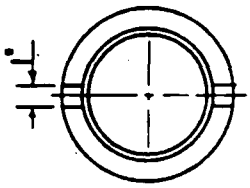

BOTTOM OF COVER

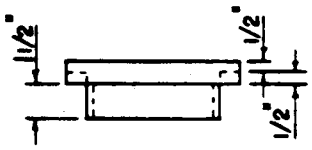

ELEVATION

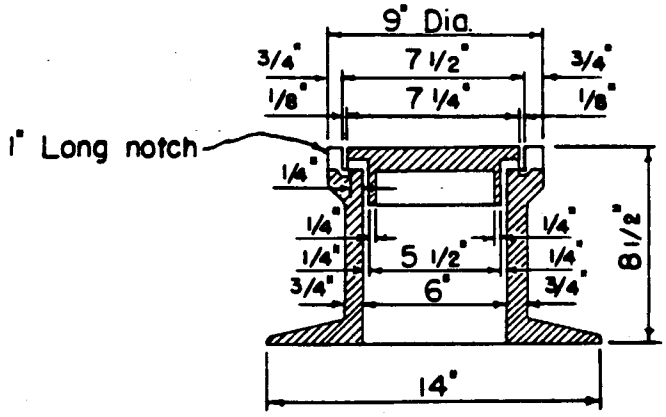

SECTION

DROP MANHOLE CHIMNEY CASTINGS

Scale: 1 1/2" = 1'-0"

COUNTY OF KAUAI CITY & COUNTY OF HONOLULU COUNTY OF MAUI COUNTY OF HAWAII	DROP MANHOLE CHIMNEY CASTING SCALE: 1-1/2" = 1'-0" SEPTEMBER 1984	STANDARD DETAILS	S-41

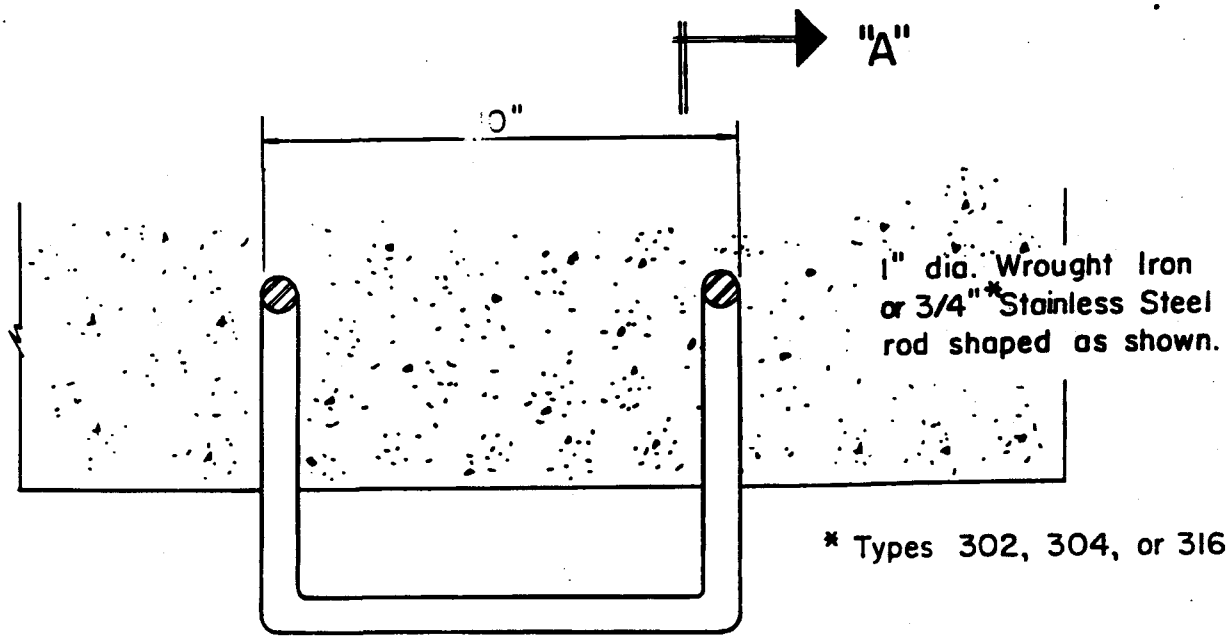

PLAN

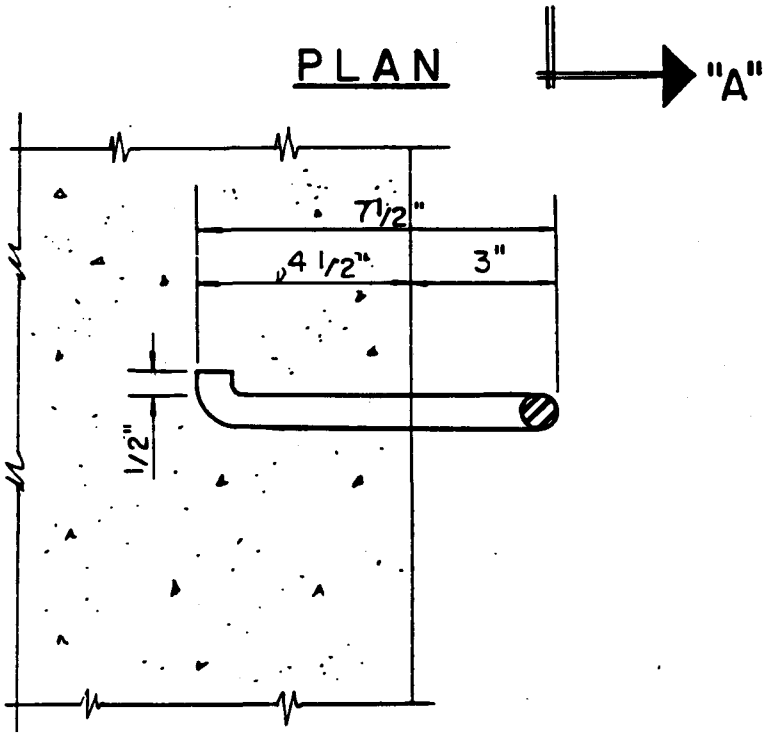

SECTION "AA"

Scale: 3" = 1'-0"

S-42	STANDARD DETAILS	MANHOLE RUNG DETAILS - TYPE SA SEPTEMBER 1984 SCALE: 3" = 1'-0"	COUNTY OF KAUAI CITY & COUNTY OF HONOLULU COUNTY OF MAUI COUNTY OF HAWAII

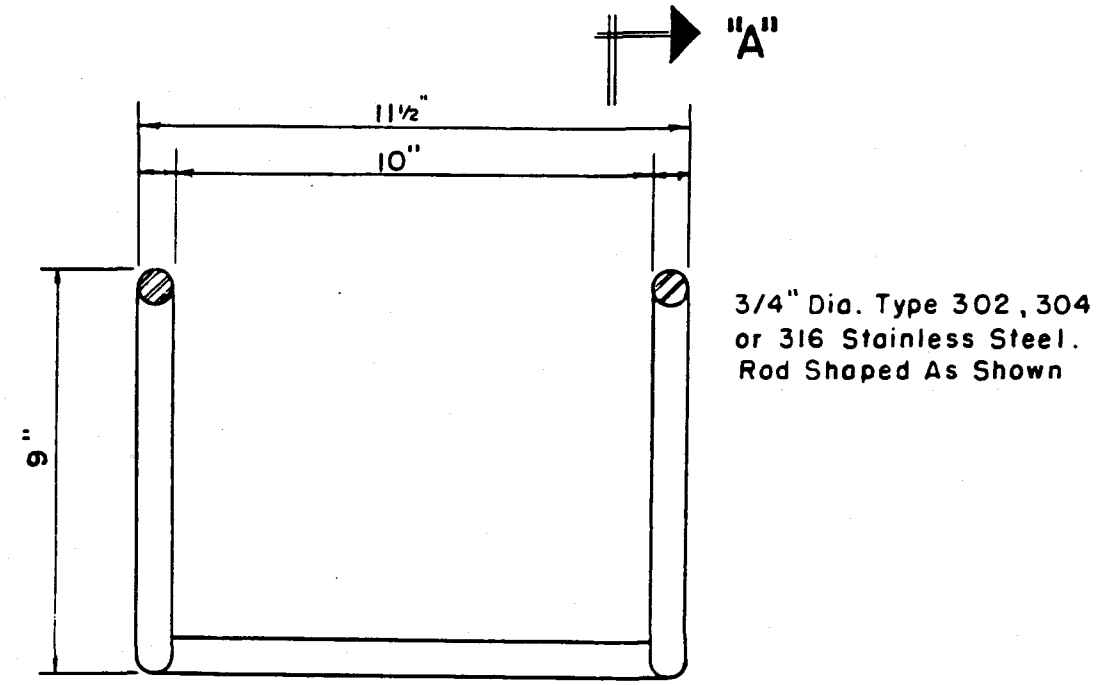

PLAN

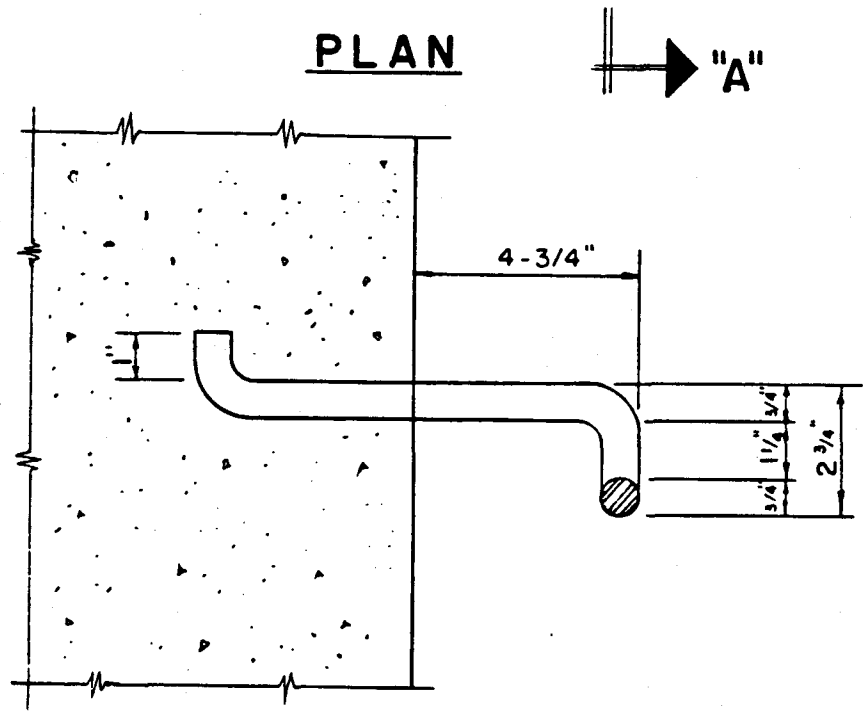

SECTION "AA"

TYPE SC MANHOLE RUNG DETAILS

(STAINLESS STEEL)

Scale: 3" = 1'-0"

COUNTY OF KAUAI CITY & COUNTY OF HONOLULU COUNTY OF MAUI COUNTY OF HAWAII	MANHOLE RUNG DETAILS - TYPE SC SCALE: 3" = 1'-0" SEPTEMBER 1984	STANDARD DETAILS	S-43

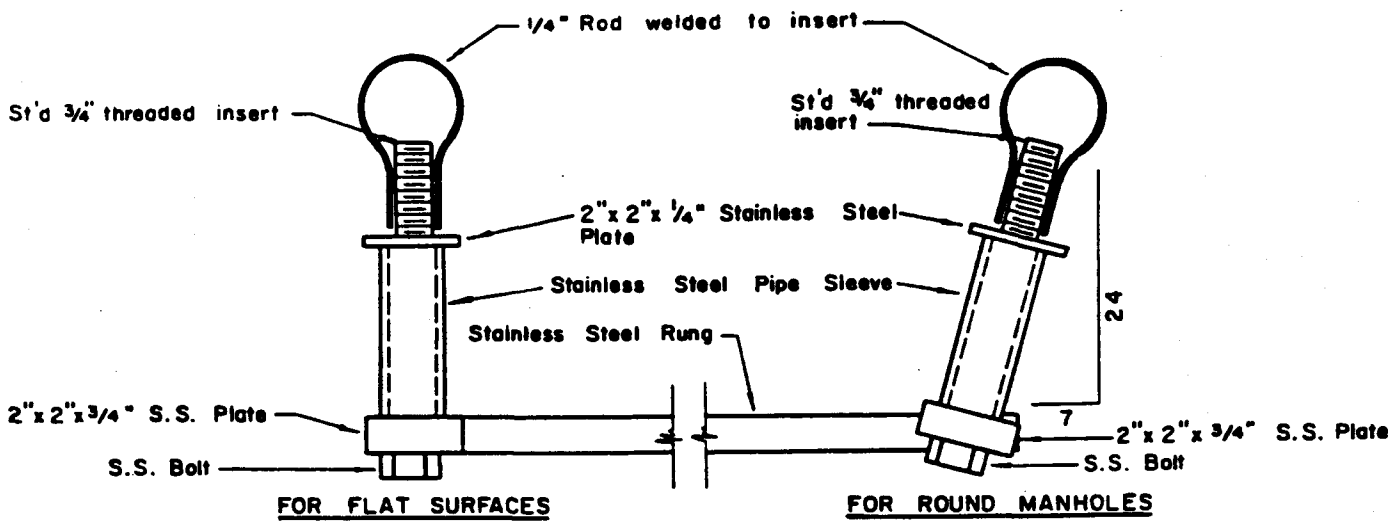

PLAN

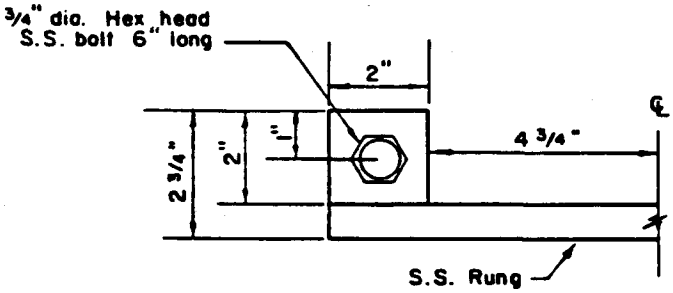

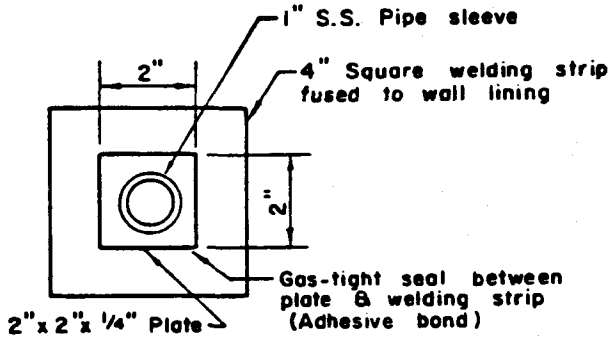

FRONT ELEVATION

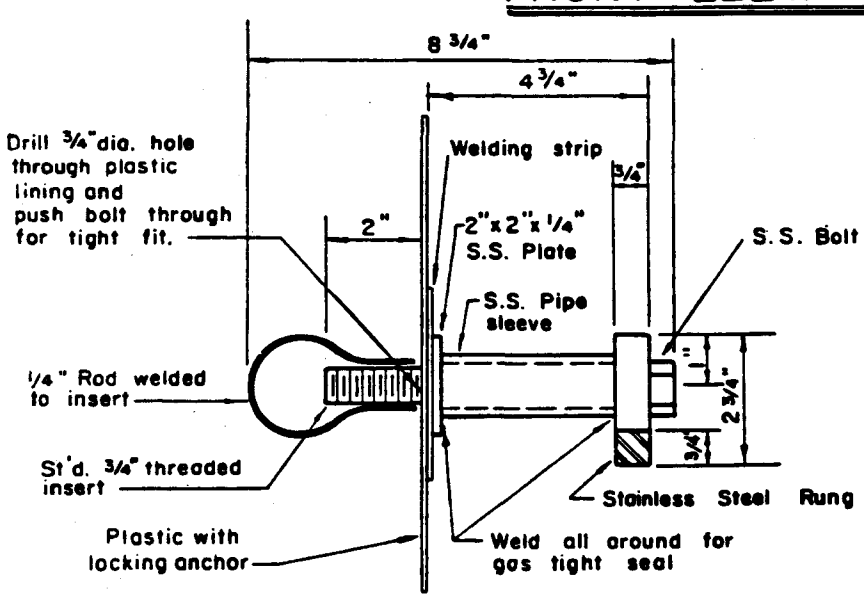

NOTES:

1. All items exclusive of insert to be stainless steel Type 316, 304 or equal.
2. Welding of plate & bar to fabricate rung shall result in joints with equal strength & corrosion resistance as the S.S. materials being welded.
3. Grind all sharp edges.

SIDE ELEVATION

TYPE SD MANHOLE RUNG DETAILS

S-44	STANDARD DETAILS	MANHOLE RUNG DETAILS - TYPE SD SEPTEMBER 1984 SCALE: 3" = 1'-0"	COUNTY OF KAUAI CITY & COUNTY OF HONOLULU COUNTY OF MAUI COUNTY OF HAWAII

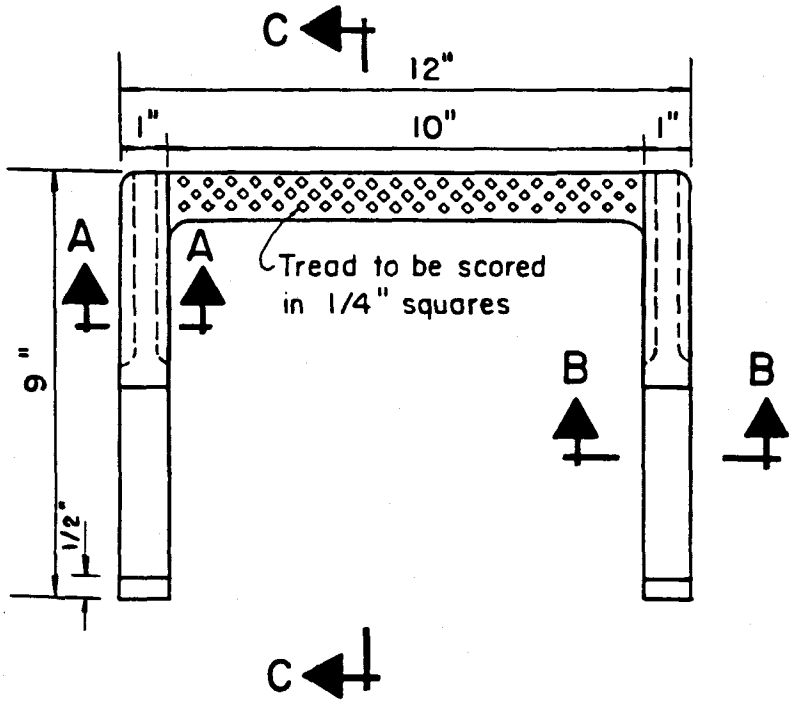

PLAN

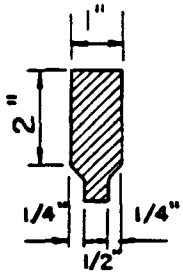

SECTION A-A

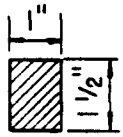

SECTION B-B

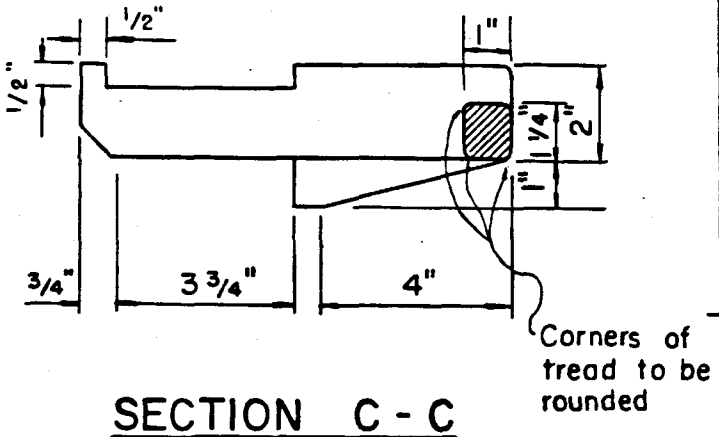

SECTION C - C

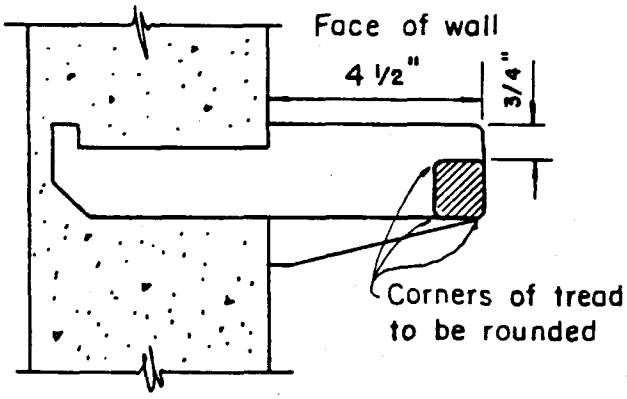

METHOD OF INSTALLATION

TYPE SE MANHOLE RUNGS

CAST IRON OR DUCTILE IRON

Scale: 3" = 1'-0"

COUNTY OF KAUAI CITY & COUNTY OF HONOLULU COUNTY OF MAUI COUNTY OF HAWAII	MANHOLE RUNG DETAILS - TYPE SE SCALE: 3" = 1'-0" SEPTEMBER 1984	STANDARD DETAILS	S-45

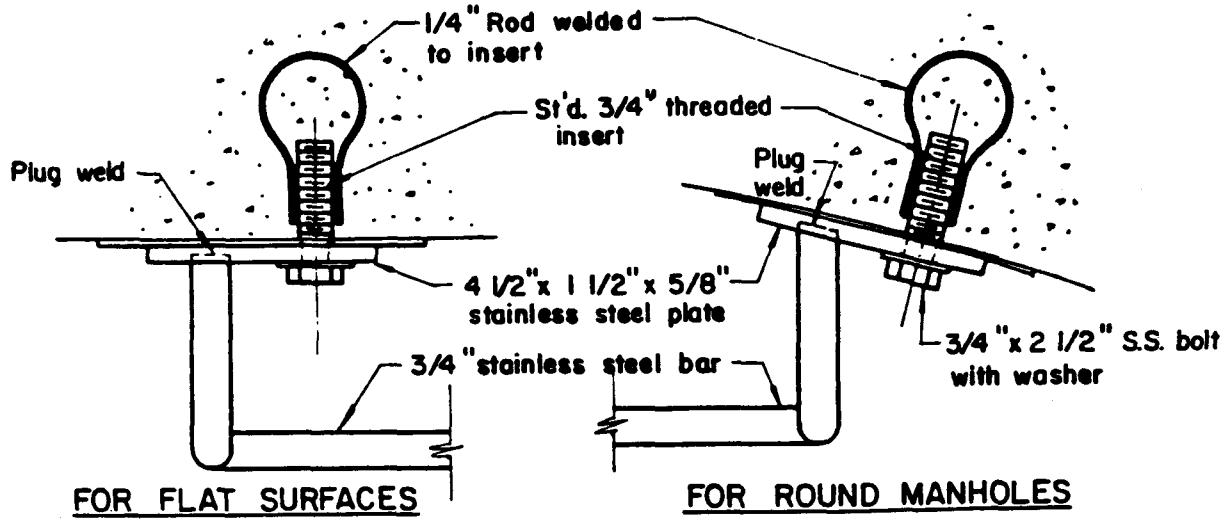

PLAN

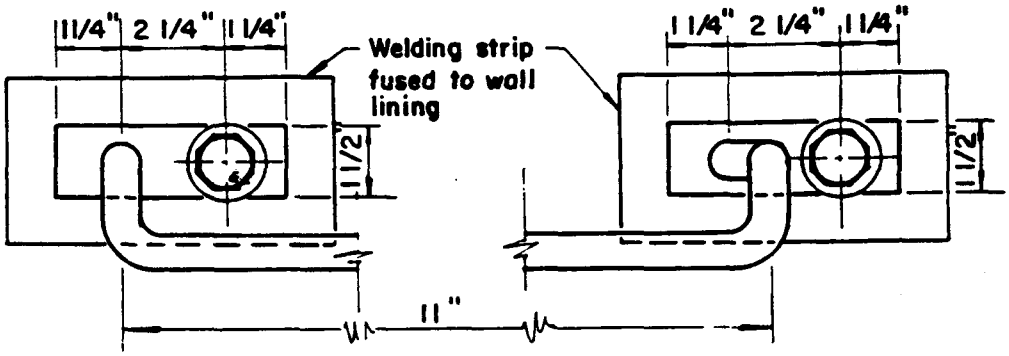

FRONT ELEVATION

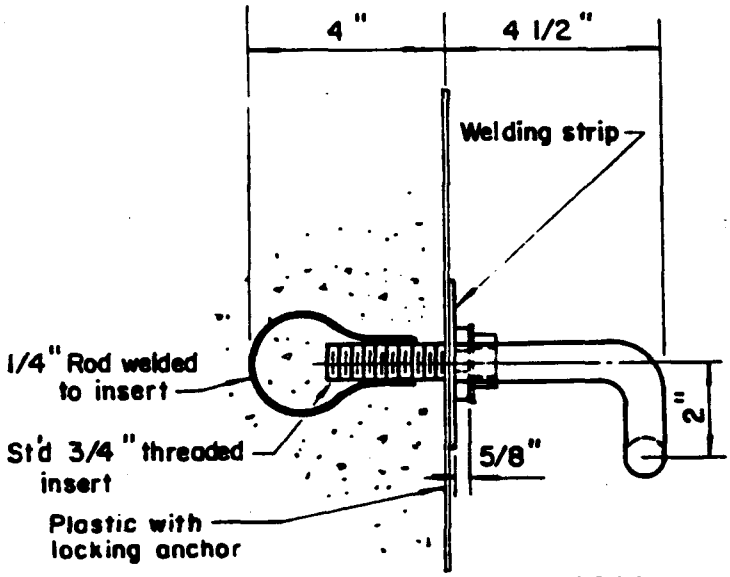

SIDE ELEVATION

NOTES:

1. All items exclusive of insert to be stainless steel Type 316, 304 or equal.
2. Welding of plate and bar to fabricate rung shall result in joints with equal strength and corrosion resistance as the S.S. materials being welded.

TYPE SF MANHOLE RUNG DETAILS

Scale: 3" = 1'-0"

S-46	STANDARD DETAILS	MANHOLE RUNG DETAILS - TYPE SF SEPTEMBER 1984 SCALE: 3" = 1'-0"	COUNTY OF KAUAI CITY & COUNTY OF HONOLULU COUNTY OF MAUI COUNTY OF HAWAII

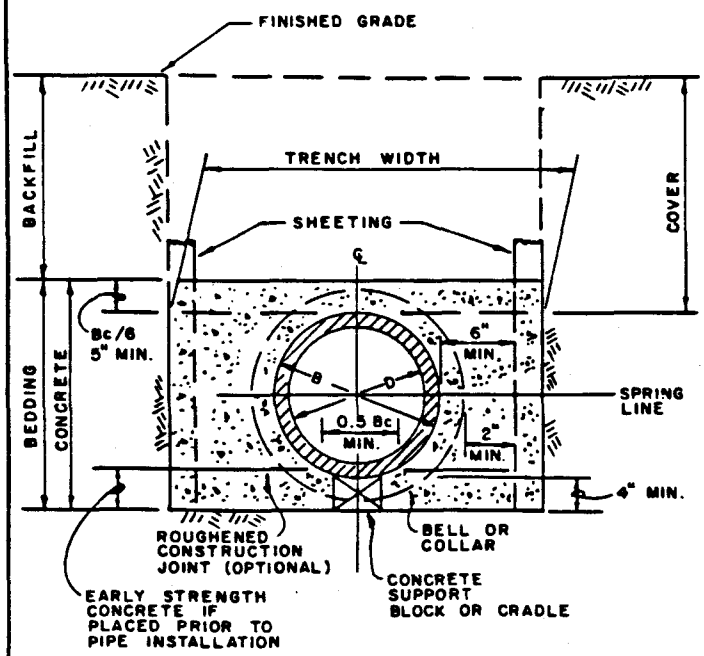

CLASS A BEDDING

NOT TO SCALE

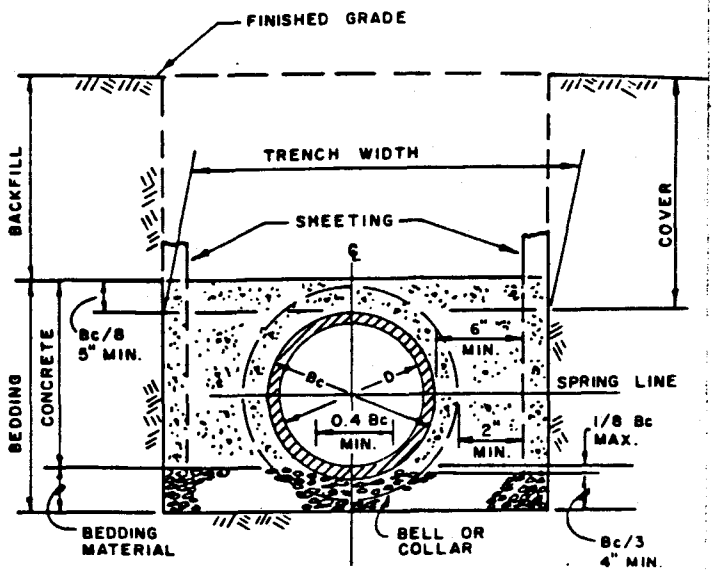

CLASS C BEDDING

NOT TO SCALE

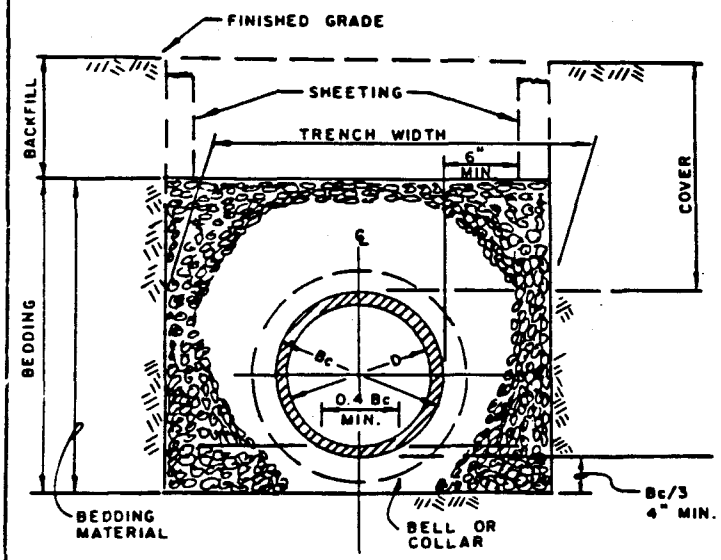

CLASS B BEDDING

NOT TO SCALE

BEDDING REQUIREMENTS

(6" to 12" I.D. PIPES)

DEPTH OF COVER, C IN FEET	BEDDING CLASS
$C \leq 4$	A
$4 < C \leq 17$	B
$17 < C \leq 30$	C
$C > 30$	Special Design

COUNTY OF KAUAI CITY & COUNTY OF HONOLULU COUNTY OF MAUI COUNTY OF HAWAII	PVC PIPE - BEDDING REQUIREMENTS NOT TO SCALE SEPTEMBER 1984	STANDARD DETAILS	S-47

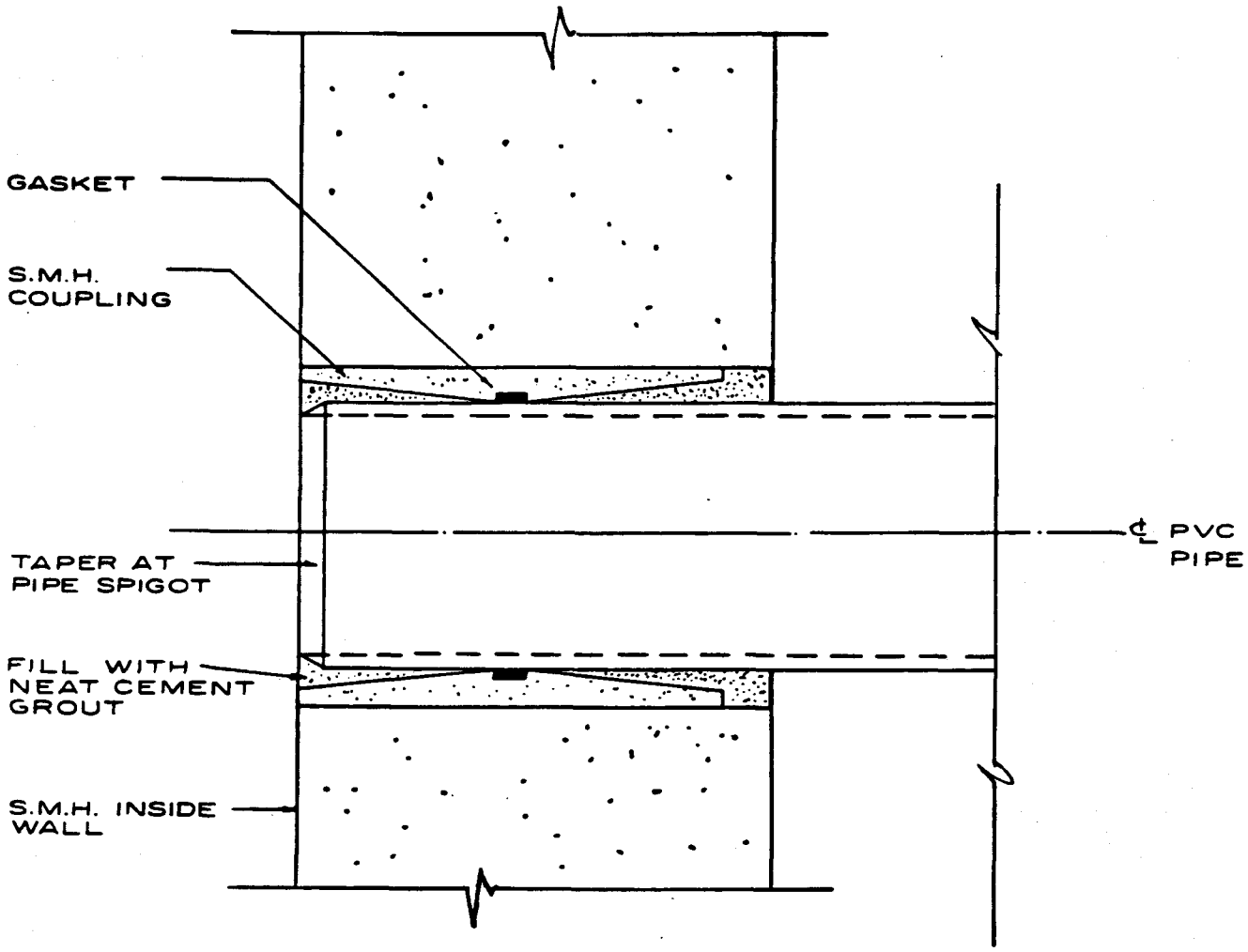

SECTION THRU MANHOLE WALL

S-48	STANDARD DETAILS	PVC PIPE - RESILIENT MANHOLE CONNECTION SEPTEMBER 1984 NOT TO SCALE	COUNTY OF KAUAI CITY & COUNTY OF HONOLULU COUNTY OF MAUI COUNTY OF HAWAII

STANDARD DETAILS for Public Works Construction

September 1984

Sewage Pump Stations & Treatment Plants

PART

4

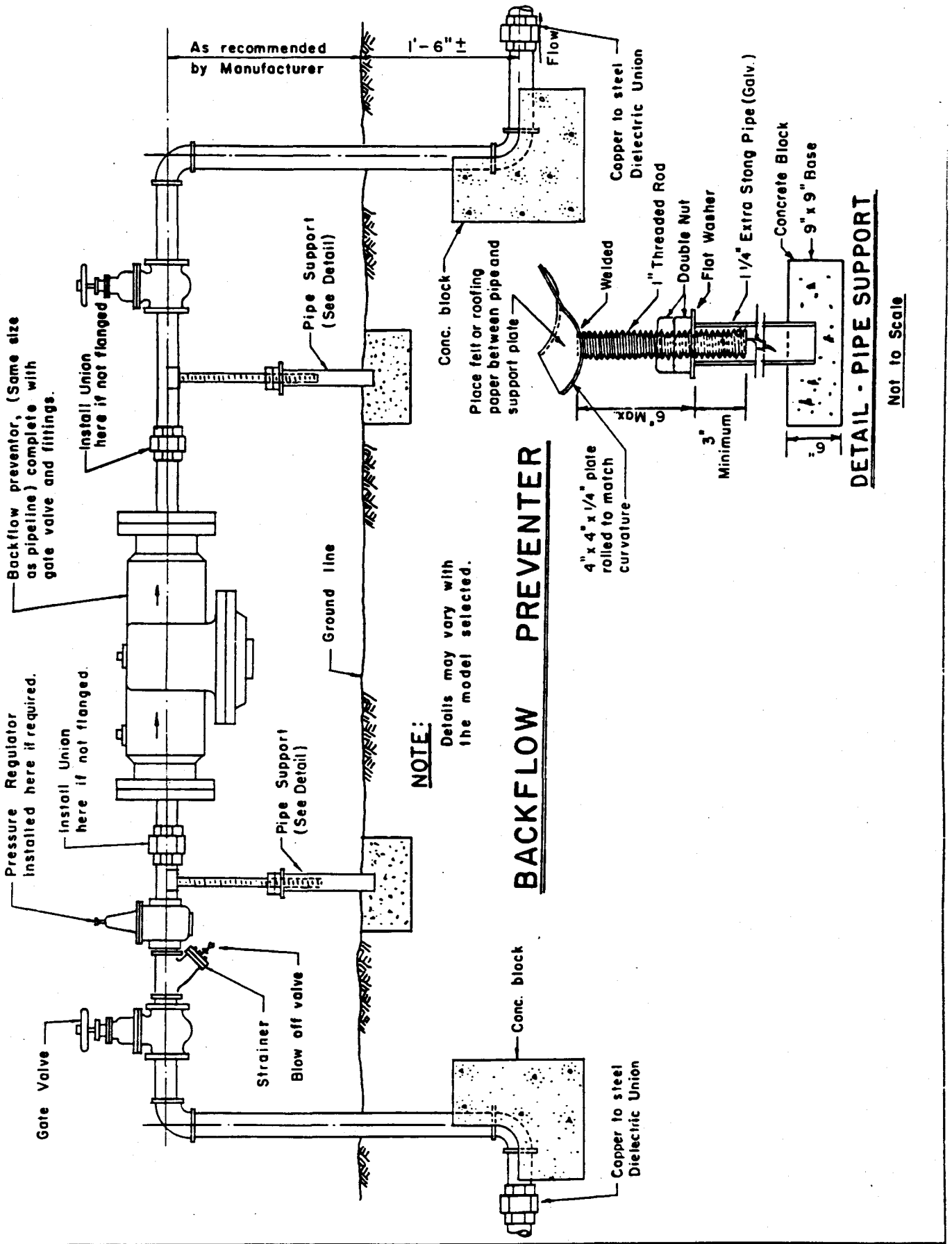

COUNTY OF KAUAI CITY & COUNTY OF HONOLULU	BACKFLOW PREVENTER NOT TO SCALE SEPTEMBER 1984	STANDARD DETAILS	P-1

P-2

STANDARD DETAILS

FENCE AND GATE DETAILS

SEPTEMBER 1984

SCALE: 3/8" = 1'-0"

COUNTY OF KAUAI
CITY & COUNTY OF HONOLULU

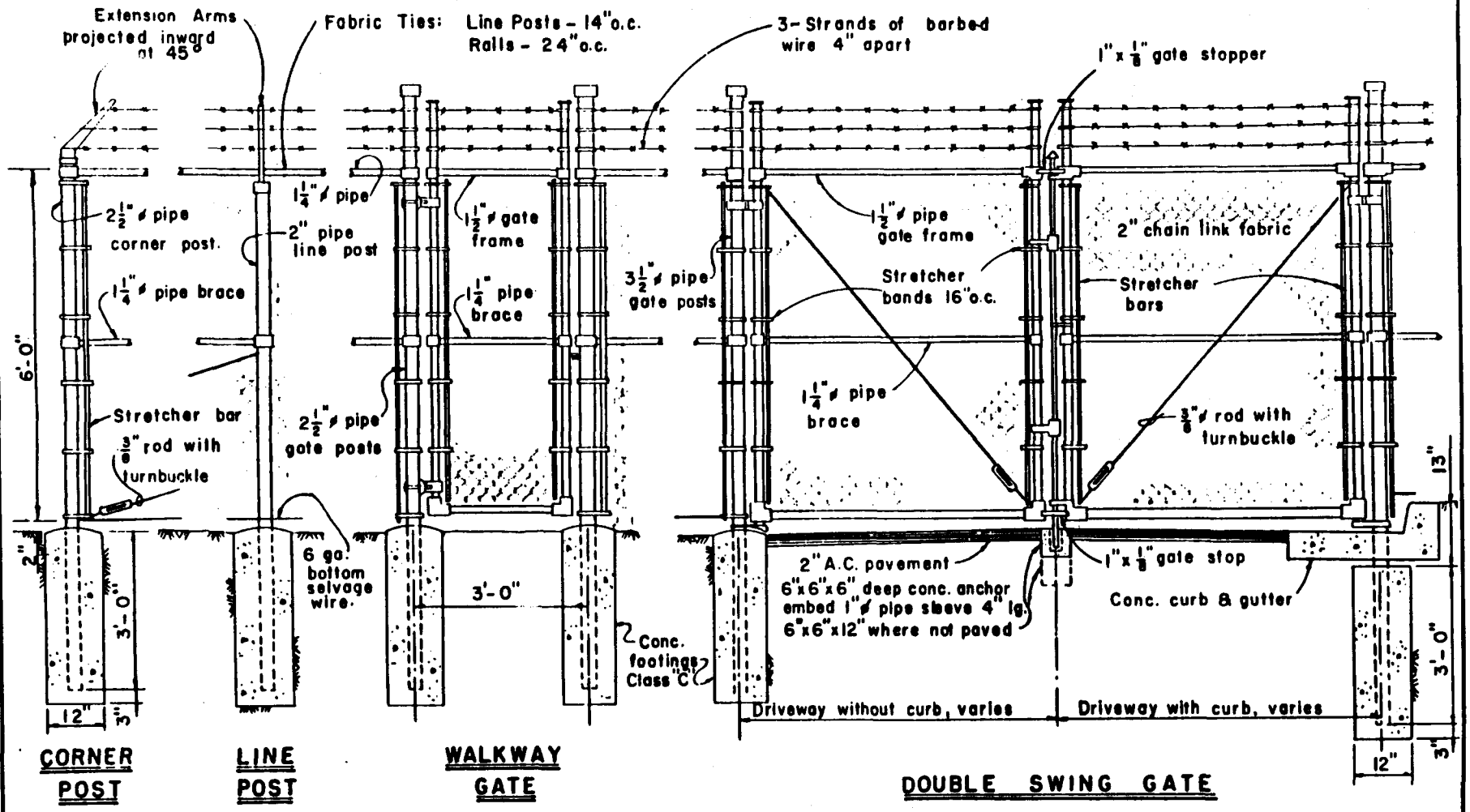

NOTES

1. Fencing materials shall be of aluminum or galvanized steel as called for in the specifications.
2. Posts, braces, and gate frames shall be schedule 40 (standard weight) pipe. Sizes specified are nominal diameter.
3. Double Swing Gate shall be provided with Tubular Plunger Bar, 1 Lock keeper, 1 Lock Keeper Guide, 2 Latch Forks, 2 Fork Catches, 1 Catch for plunger bar, and 2 Gate Stops located as directed by the Engineer.
4. Walkway Gate shall be provided with Fork Latch assemblies with provisions for padlocking.
5. Padlocks of the approved type keyed to the Division of Sewers master key system shall be provided for gate locks.
6. Posts, caps and other necessary fence fittings shall be as manufactured by the fence manufacturer or equal except hinges shall be of galvanized steel.
7. Posts shall be spaced equidistant but not more than 10' o.c.
8. Aluminum posts embedded in concrete shall be coated inside and outside to depth of embedment plus 4" with zinc chromate primer and aluminum pigmented bituminus paint.
9. Where galvanized steel hinges are used on aluminum posts they shall be insulated to prevent galvanic action.

Revised 8-26-68

FENCE DETAILS

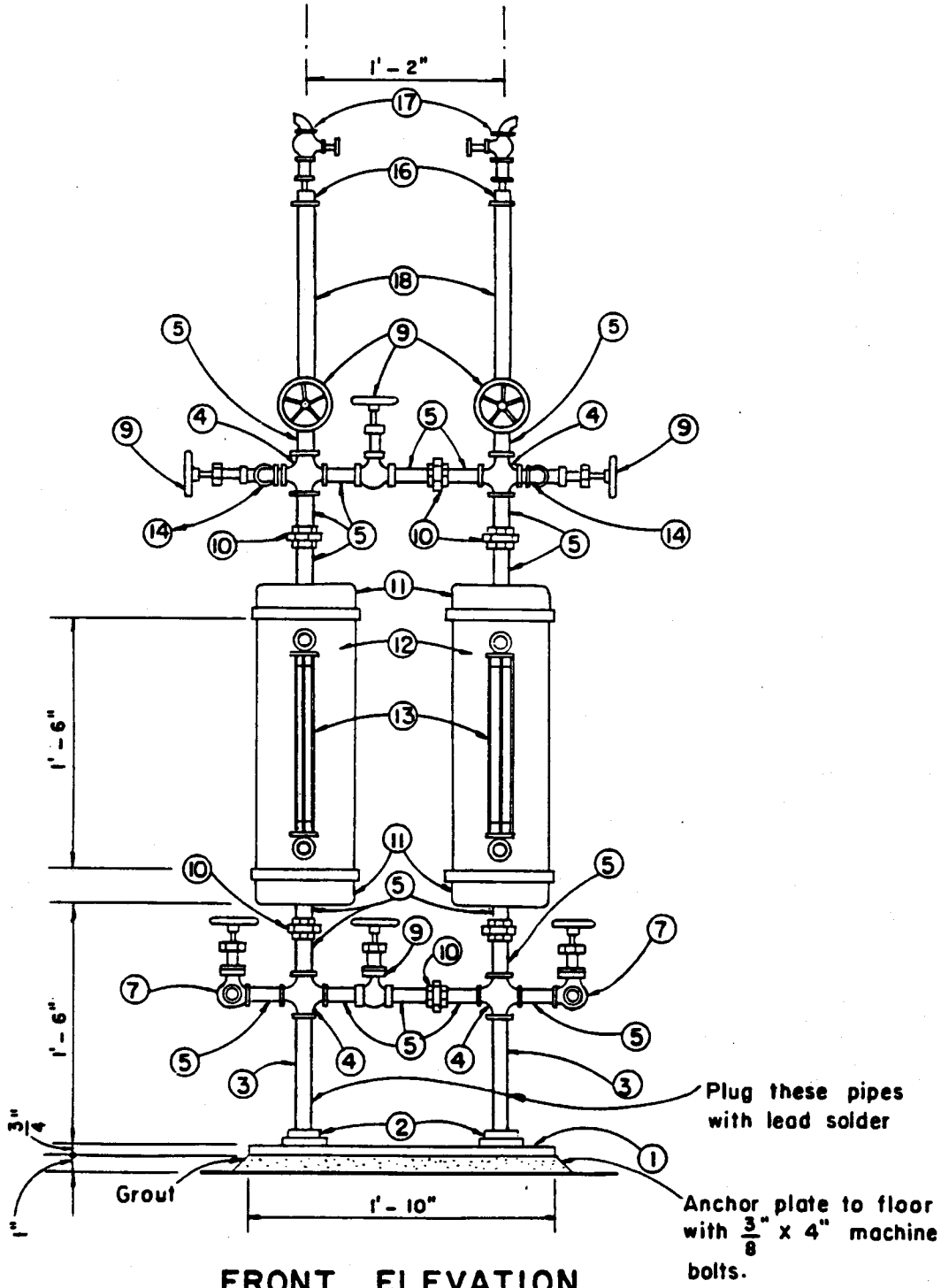

FRONT ELEVATION

OIL SEALS & RELATED PIPING

NOTES:

All piping on the oil seals shall be tested before the sealing units are installed. All leaks shall be repaired by the Contractor before the tanks are filled with oil.

COUNTY OF KAUAI CITY & COUNTY OF HONOLULU	OIL SEALS AND RELATED PIPING NOT TO SCALE SEPTEMBER 1984	STANDARD DETAILS	P-3

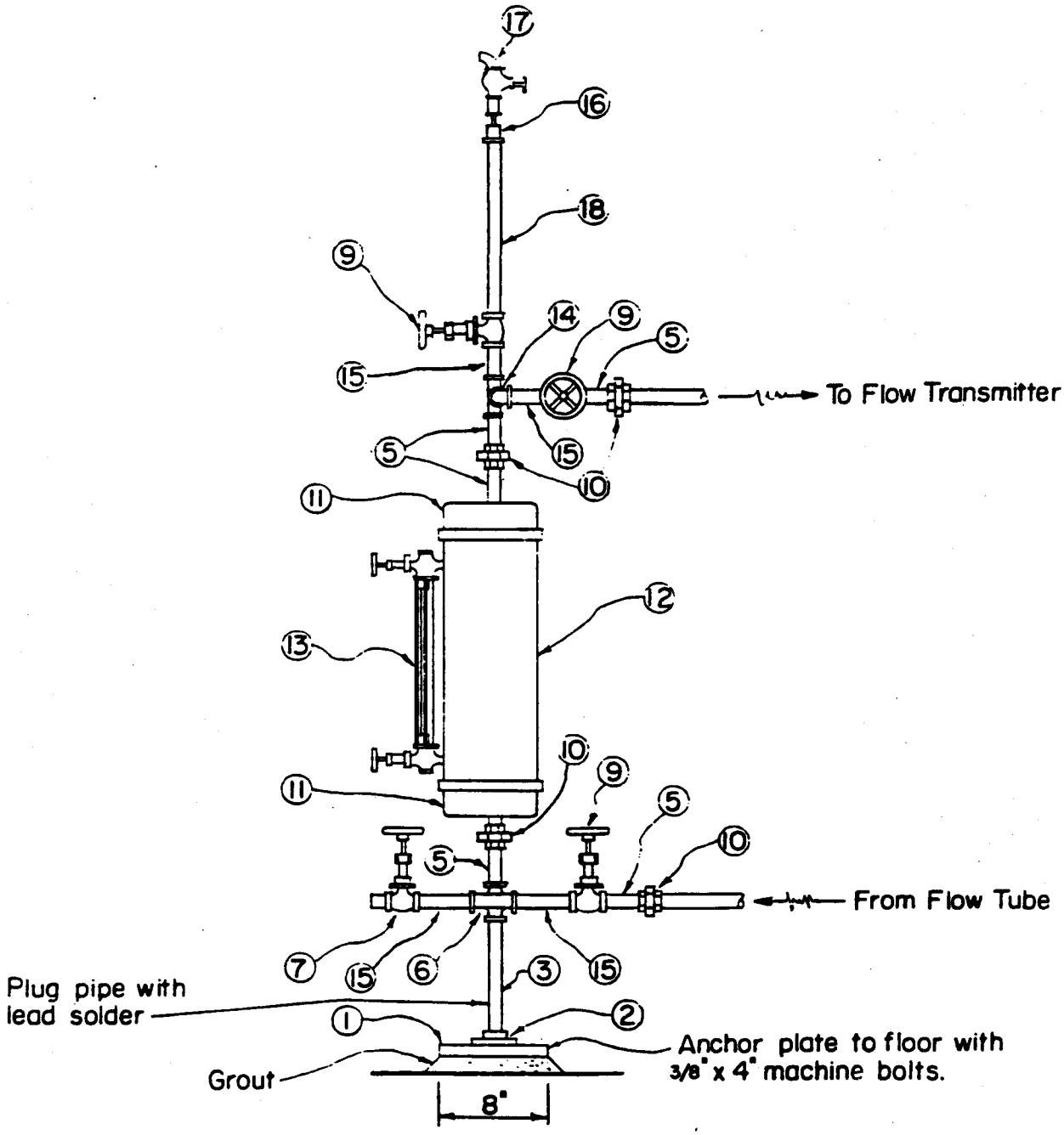

SIDE ELEVATION

OIL SEALS & RELATED PIPINGS

Scale: 1" = 1'-0"

NOTE:

All piping on the oil seals shall be tested before the sealing units are installed. All leaks shall be repaired by the Contractor before the tanks are filled with oil.

P-4	STANDARD DETAILS	OIL SEALS AND RELATED PIPING SEPTEMBER 1984 SCALE: 1" = 1'-0"	COUNTY OF KAUAI CITY & COUNTY OF HONOLULU

ITEMS FOR OIL SEALS & RELATED PIPINGS

ITEM NO.	ITEM	QUANT.
1	3/4" galv. steel plate 8" x 22"	1
2	Floor flange, Brass 1"	2
3	Pipe, 8 1/2" long, Brass 1" (Plugged)	2
4	Cross, Brass 1"	4
5	Nipple, 3" long, Brass 1"	22
6	Tee, Brass 1"	2
7	1" gate valves, OIC, Bronze with 3/4" hose nipple	2
9	Gate valve, screwed ends, Brass 1"	8
10	Union, Brass 1"	10
11	Pipe cap, Galv. Malleable Iron 6"	4
12	Pipe, 19" long, Wrought Iron 6"	2
13	Lunkenheimer gauge glass Fig. No. 460 bronze 3 rods with 3/8" pipe threads and 1/2" x 12" long glass.	2
14	Elbow, 90° 1" brass with 1" nipple	2
15	Pipe, 5" long, brass 1"	8
16	Cap, brass, 1"	2
17	Aircock, Tee handle, brass 1/4" with male end bibb hose or 90° elbow	2
18	Pipe, 12" long, brass 1"	2

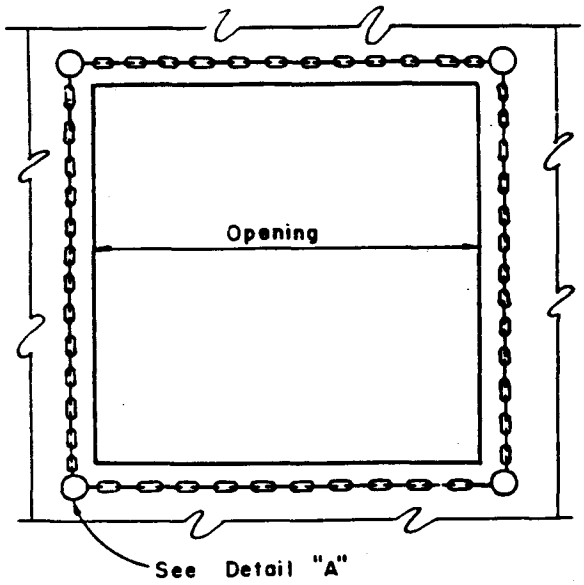

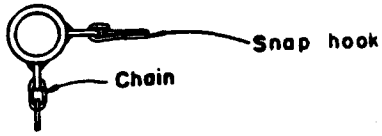

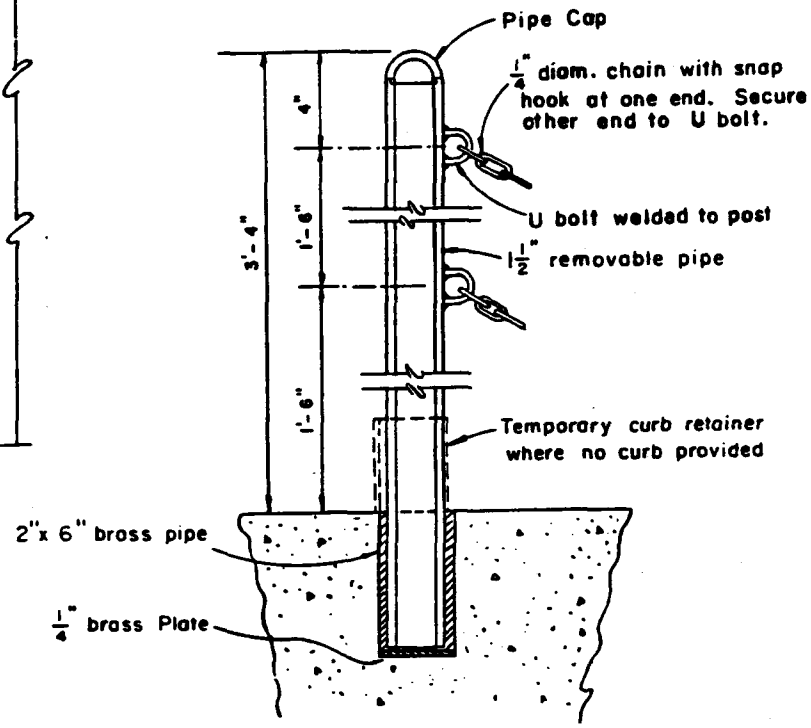

SECTION

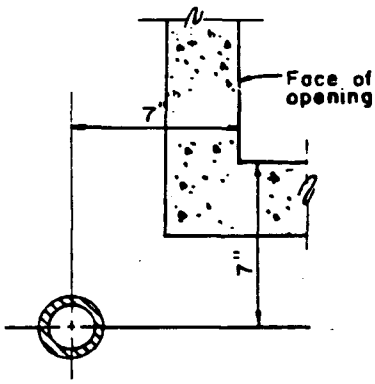

DETAIL "A"

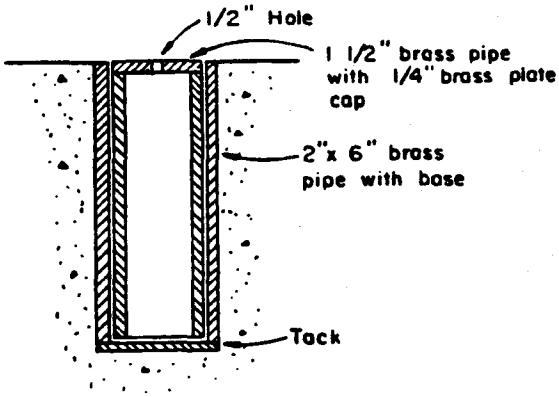

DETAIL

COVER PLATE

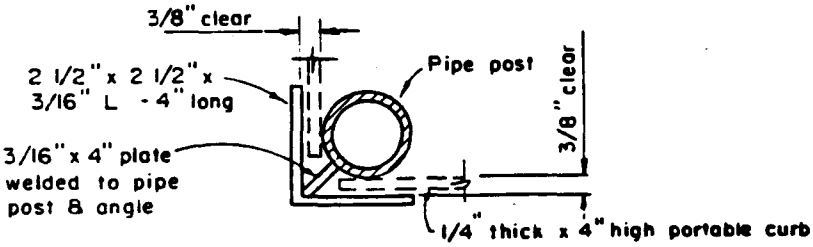

TEMPORARY CURB RETAINER

REMOVABLE POST & CHAIN DETAILS

P-6	STANDARD DETAILS	REMOVABLE POST AND CHAIN DETAILS SEPTEMBER 1984 NOT TO SCALE	COUNTY OF KAUAI CITY & COUNTY OF HONOLULU

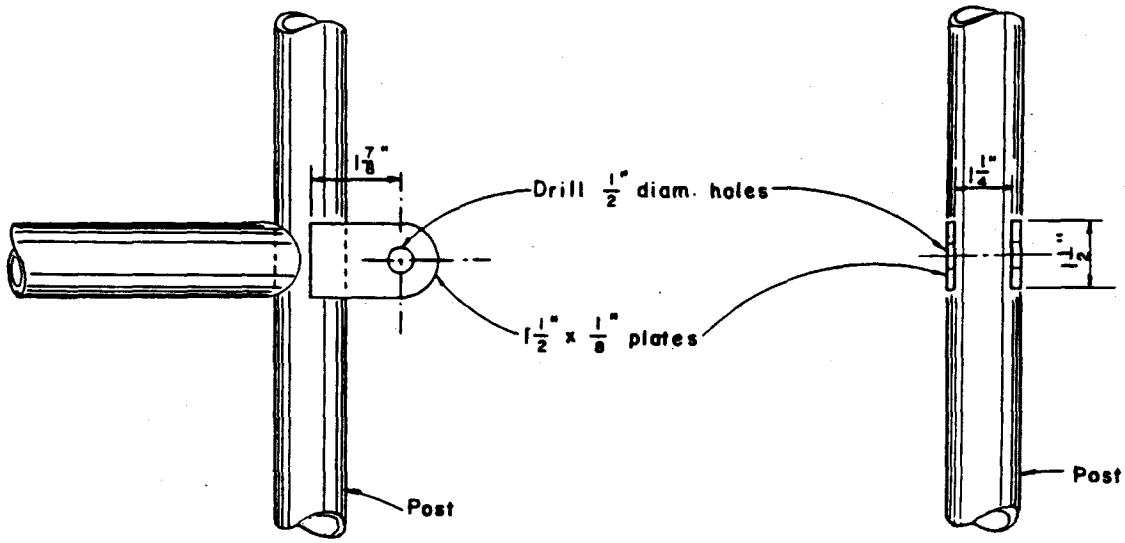

ELEVATIONS

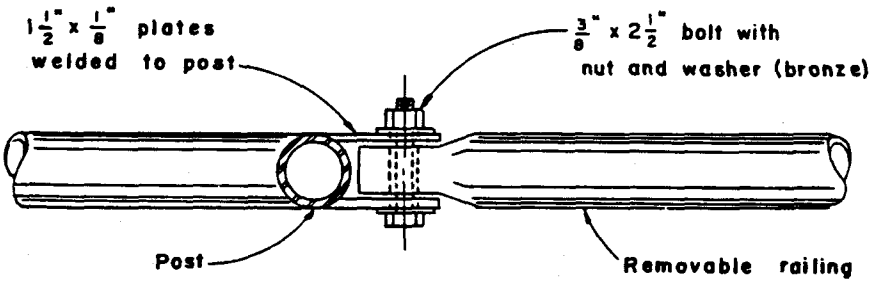

PLAN

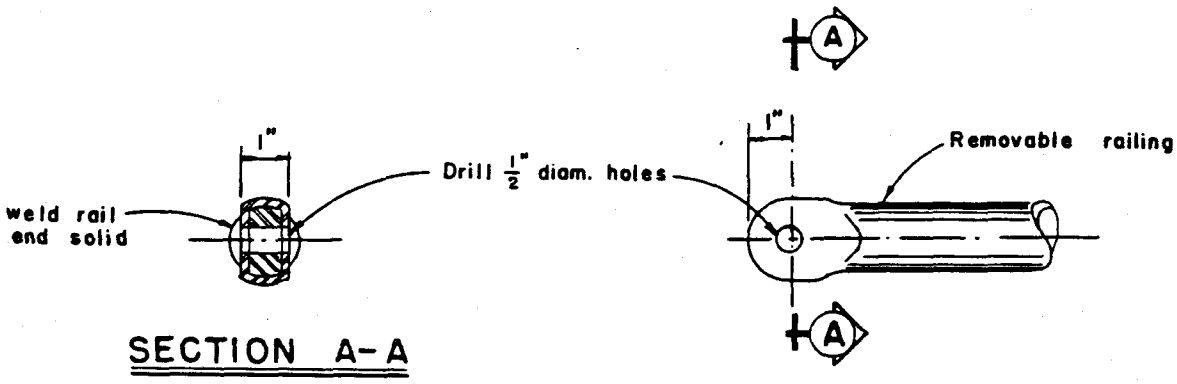

SECTION A-A

REMOVABLE RAILING DETAILS

COUNTY OF KAUAI CITY & COUNTY OF HONOLULU	REMOVABLE RAILING DETAILS NOT TO SCALE SEPTEMBER 1984	STANDARD DETAILS	P-7

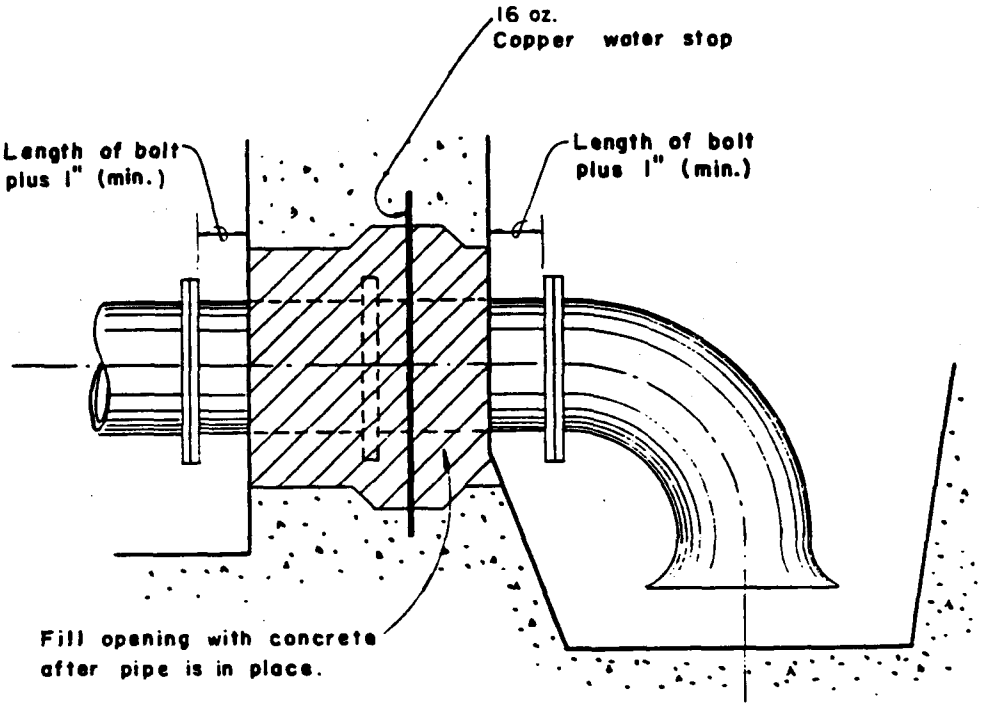

INTAKE PIPE THROUGH WALL DETAILS

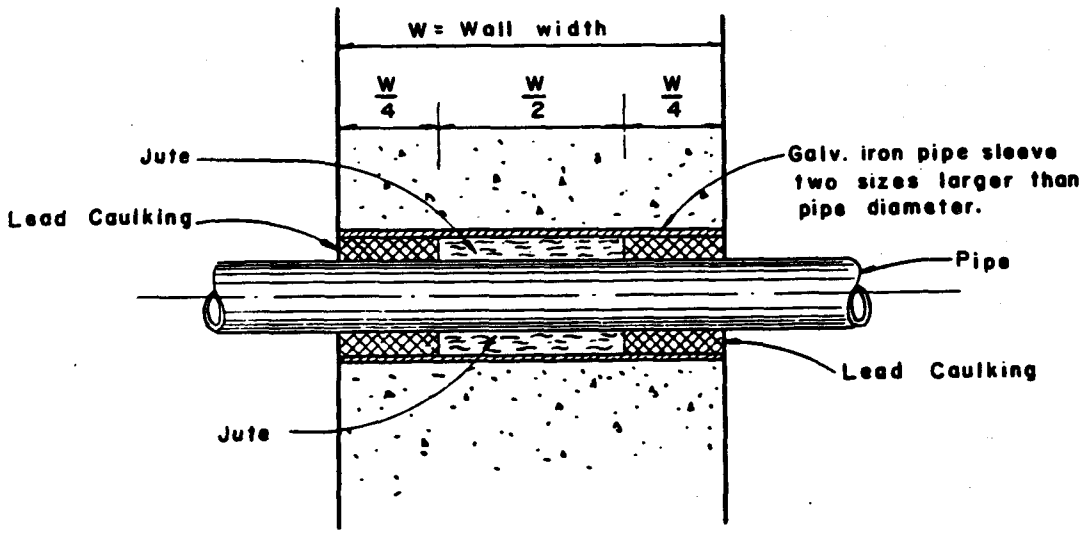

TYPICAL WALL SLEEVE DETAILS

P-8	STANDARD DETAILS	TYPICAL WALL SLEEVE SEPTEMBER 1984 NOT TO SCALE	COUNTY OF KAUAI CITY & COUNTY OF HONOLULU

Revised 8-26-68
Revised 2-8-71
Revised 12-3-75

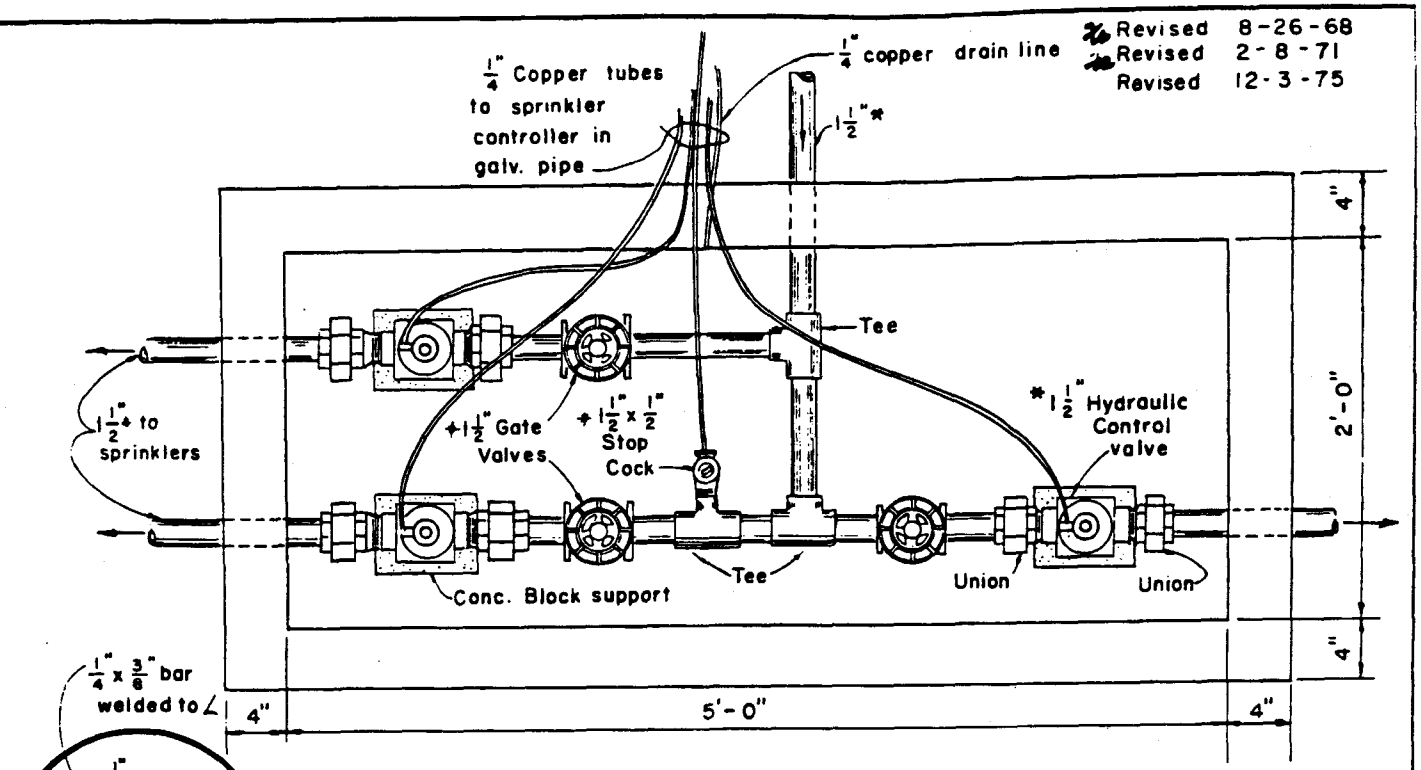

PLAN

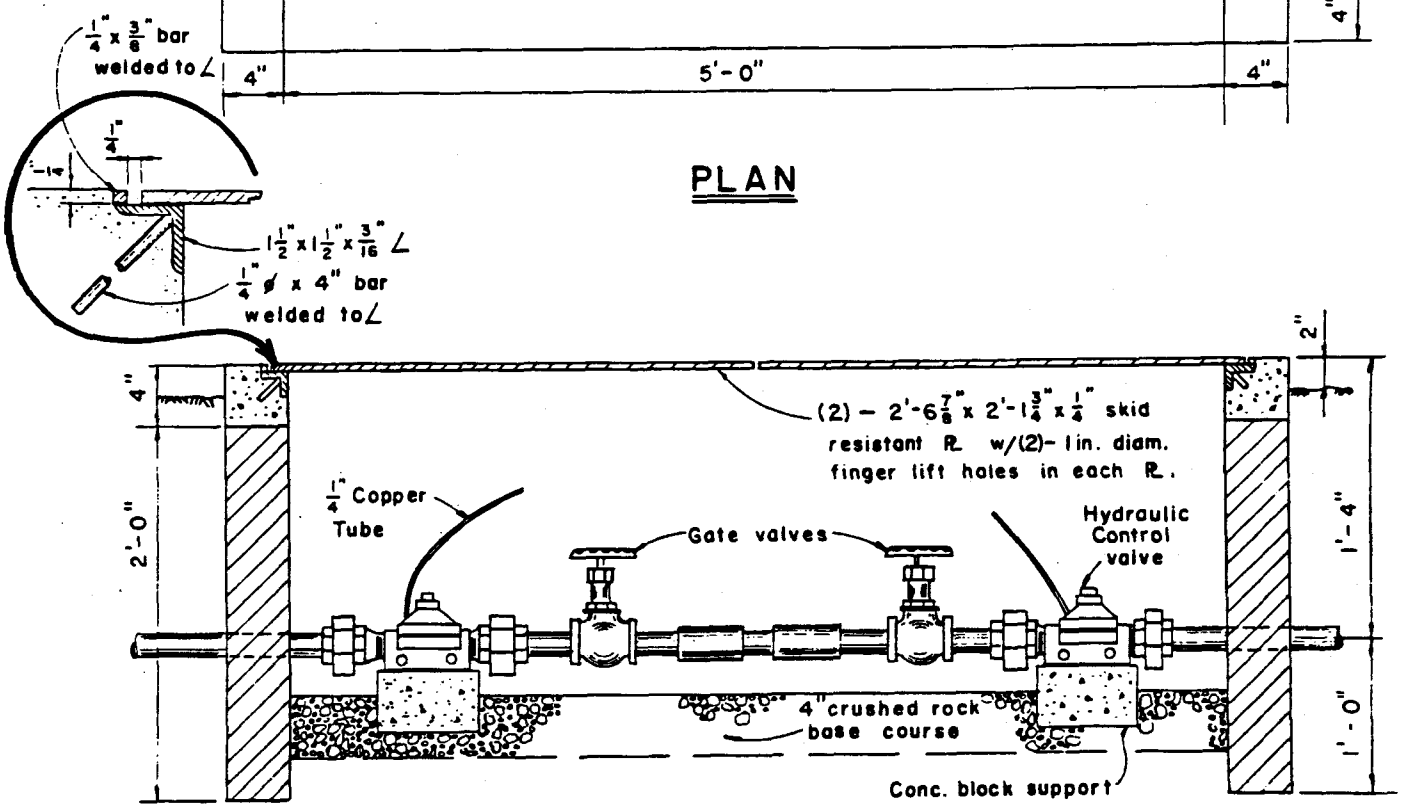

ELEVATION

NOTES:

*1. 1 1/2" piping is shown. Size shall be as specified.

2. Box dimensions & details may vary with arrangement and location.

3. Hydraulic Control valves shall be normally closed valve.

SPRINKLER VALVE CONNECTION

COUNTY OF KAUAI CITY & COUNTY OF HONOLULU	SPRINKLER VALVE CONTROL NOT TO SCALE SEPTEMBER 1984	STANDARD DETAILS	P-9

P-10

STANDARD DETAILS

MOTOR SHAFT AND COUPLING

SEPTEMBER 1984

NOT TO SCALE

COUNTY OF KAUAI
CITY & COUNTY OF HONOLULU

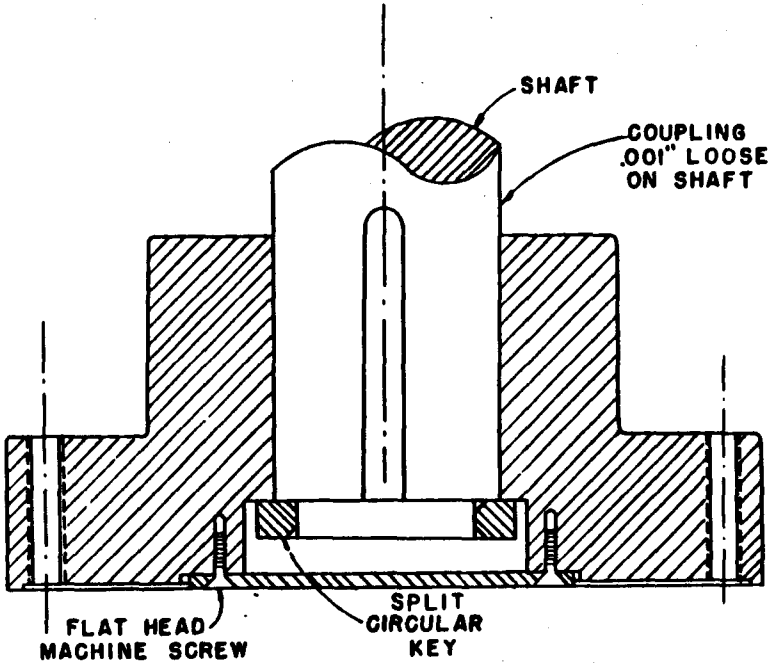

DETAIL
MOTOR SHAFT COUPLING

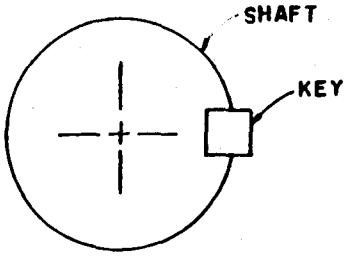

SECTION Y-Y

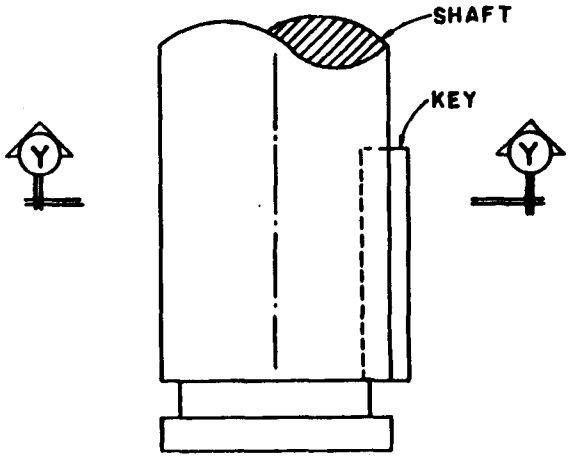

DETAIL
VERTICAL MOTOR SHAFT

VERTICAL MOTOR SHAFT & COUPLING

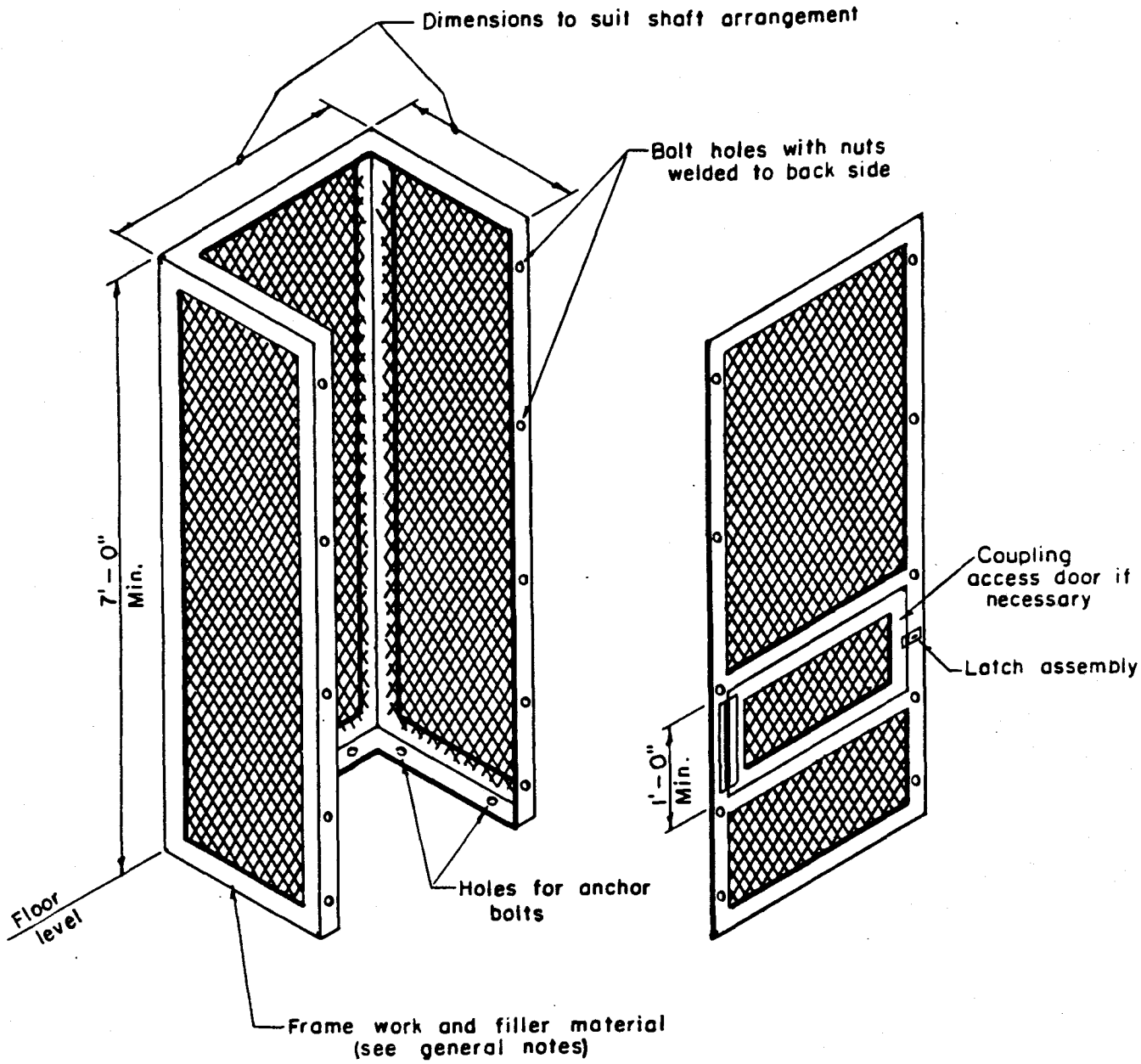

TYPICAL PUMP MOTOR DRIVE SHAFT GUARD

No Scale

CITY & COUNTY OF HONOLULU	TYPICAL PUMP MOTOR DRIVE SHAFT GUARD NOT TO SCALE SEPTEMBER 1984	STANDARD DETAILS	P-11

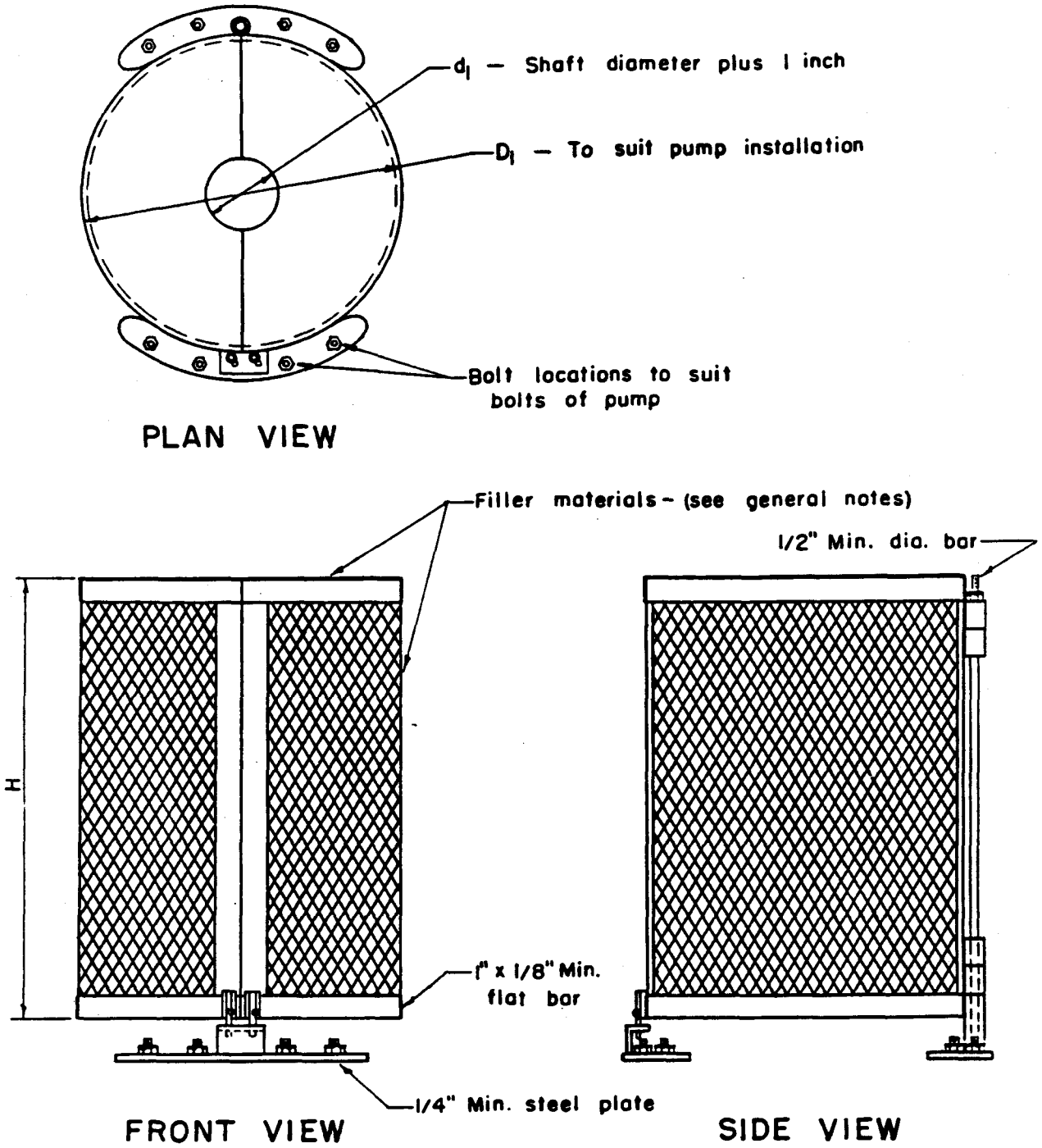

TYPICAL PUMP COUPLING GUARD

No Scale

P-12	STANDARD DETAILS	TYPICAL PUMP COUPLING GUARD SEPTEMBER 1984 NOT TO SCALE	CITY & COUNTY OF HONOLULU

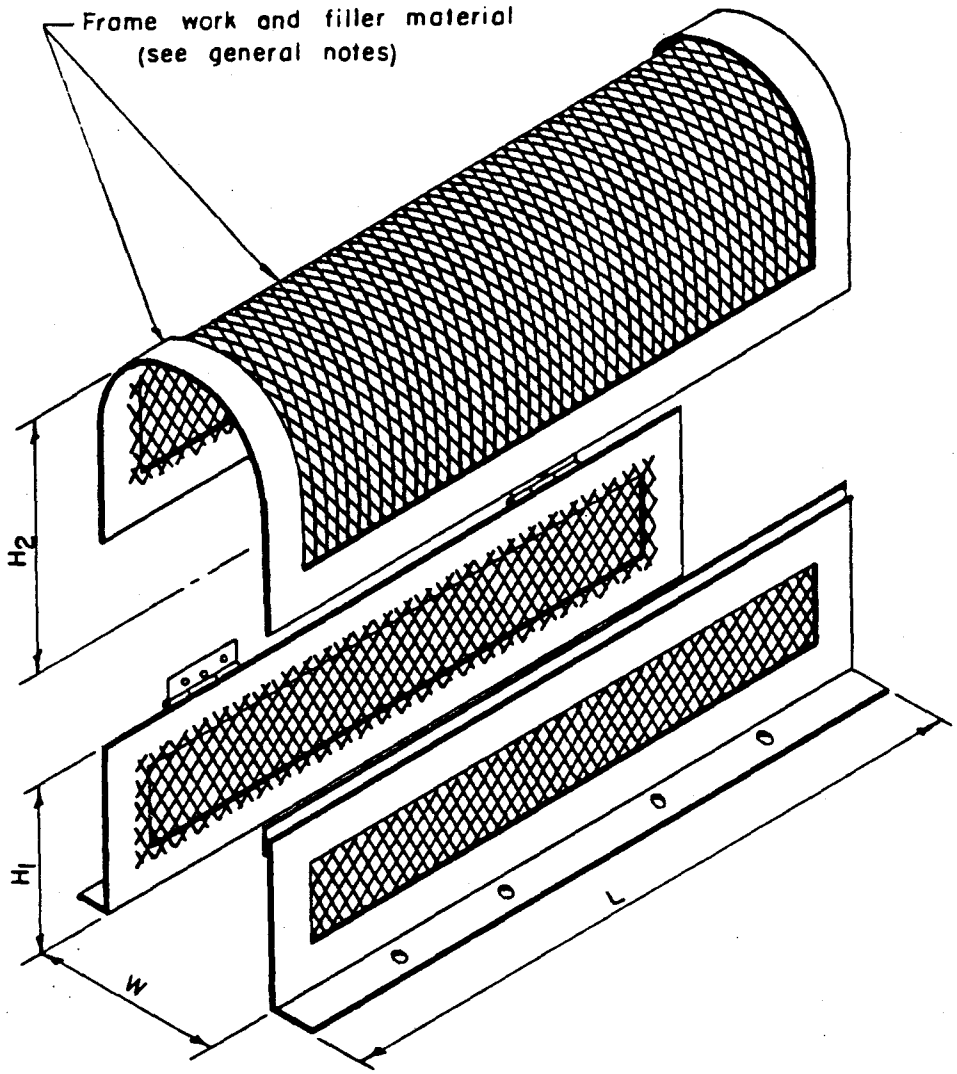

Note: All dimensions to suit shaft arrangement

TYPICAL HORIZONTAL PUMP SHAFT GUARD No.1

No Scale

CITY & COUNTY OF HONOLULU	TYPICAL HORIZONTAL SHAFT GUARD NO. 1 NOT TO SCALE SEPTEMBER 1984	STANDARD DETAILS	P-13

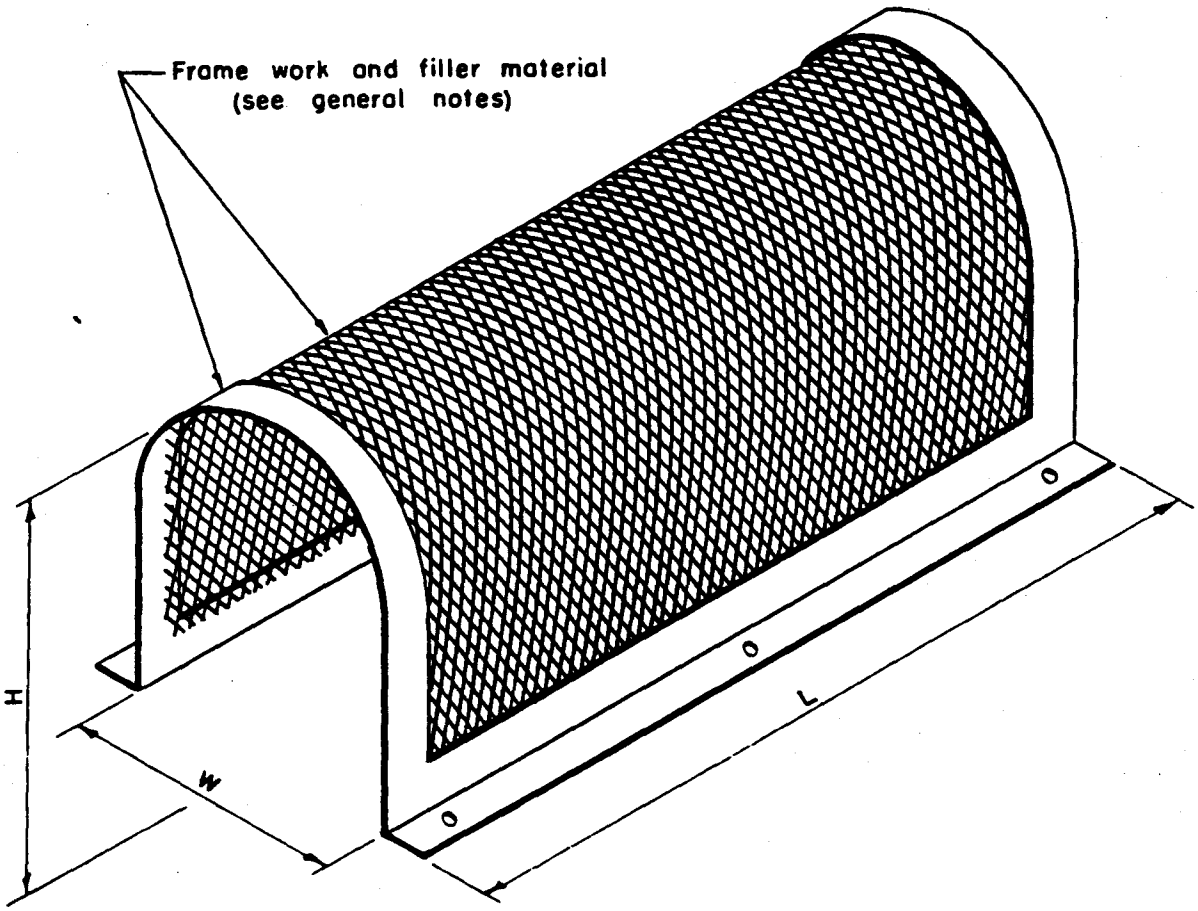

Note: All dimensions to suit shaft arrangement

TYPICAL HORIZONTAL PUMP SHAFT GUARD No. 2

No Scale

P-14	STANDARD DETAILS	TYPICAL HORIZONTAL SHAFT GUARD NO. 2 SEPTEMBER 1984 NOT TO SCALE	CITY & COUNTY OF HONOLULU

SAFETY GUARDS

GENERAL NOTES

A. Framework

1. Guards thirty (30) inches or less in height and with a total surface area not in excess of ten (10) square feet may have a frame work of 3/8 in. solid rod, 3/4 in. x 3/4 in. x 1/8 in. angle iron, or metal construction of equivalent strength.

2. Minimum dimensions of materials of all guards except as noted in paragraph 1 shall be angle iron 1 in. x 1 in. x 1/8 in., metal pipe of 3/4 in. inside diameter, or metal construction of equivalent strength.

3. The frame work for all guards fastened to the floor or working platform and without other support or bracing shall consist of 1½ in. x 1½ in. x 1/8 in. angle iron, metal pipe of 1½ in. inside diameter,,or metal construction of equivalent strength. All rectangular guards shall have at least four upright frame members each of which shall be carried to the floor and be securely fastened. Cylindrical guards shall have at least three supporting members carried to the floor.

B. Filler Material

Size of Filler Materials

Material	Clearance from moving part at all points	Largest mesh or opening allowable	Minimum gauge or thickness
	(Inches)	(Inches)	(U.S. STD)
Woven wire	Under 2	3/8	No. 16
	2-4	½	No. 16
	4-15	2	No. 12
Expanded metal	Under 4	½	No. 18
	4-15	2	No. 13
Perforated metal	Under 4	½	No. 20
	4-15	2	No. 14
Sheet metal	Under 4		No. 22
	4-15		No. 22

Note: Materials to be steel.
For additional requirements refer to project plans and specifications.

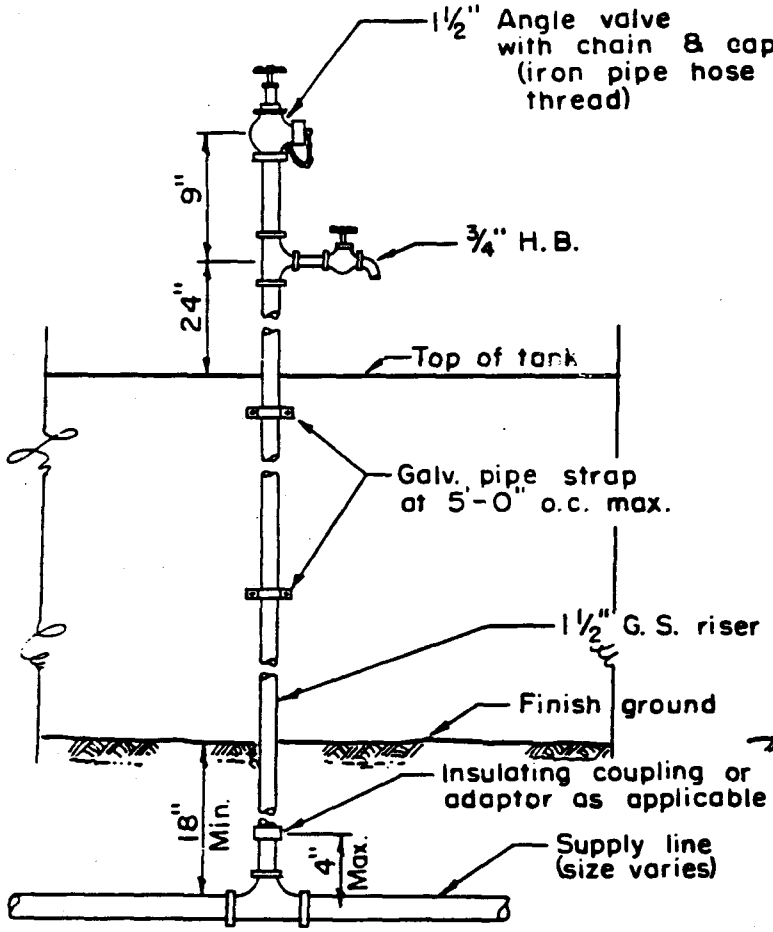

TYPICAL VALVE INSTALLATION ON TANKS

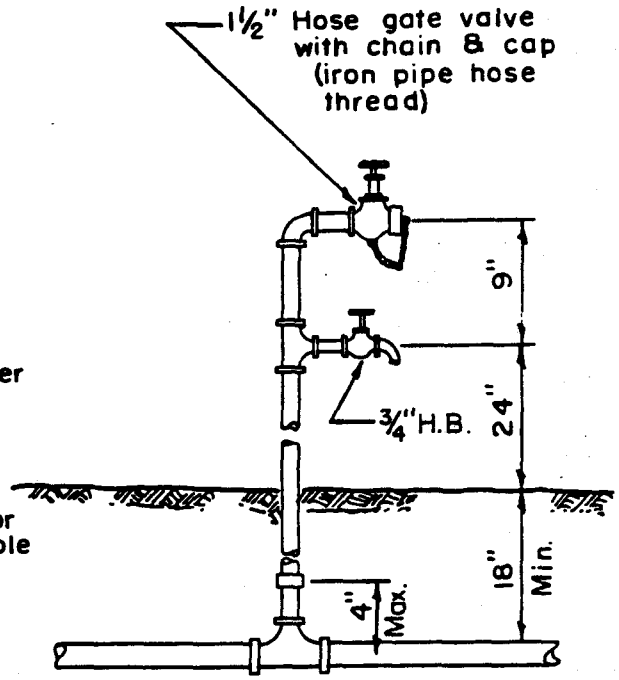

TYPICAL VALVE INSTALLATION ON GROUND

NOTES

1- Gate valves or angle valves with bronze dics or plugs shall be used.
2- Valves shall be rising or non rising stem design.
3- ¾" H.B. and 1½" gate valve shall be 90° apart.

1½" STAND PIPE DETAIL

No Scale

P-16	STANDARD DETAILS	1-1/2" STAND PIPE DETAIL SEPTEMBER 1994 NOT TO SCALE	CITY & COUNTY OF HONOLULU

STANDARD DETAILS for Public Works Construction

September 1984

Traffic

PART

5

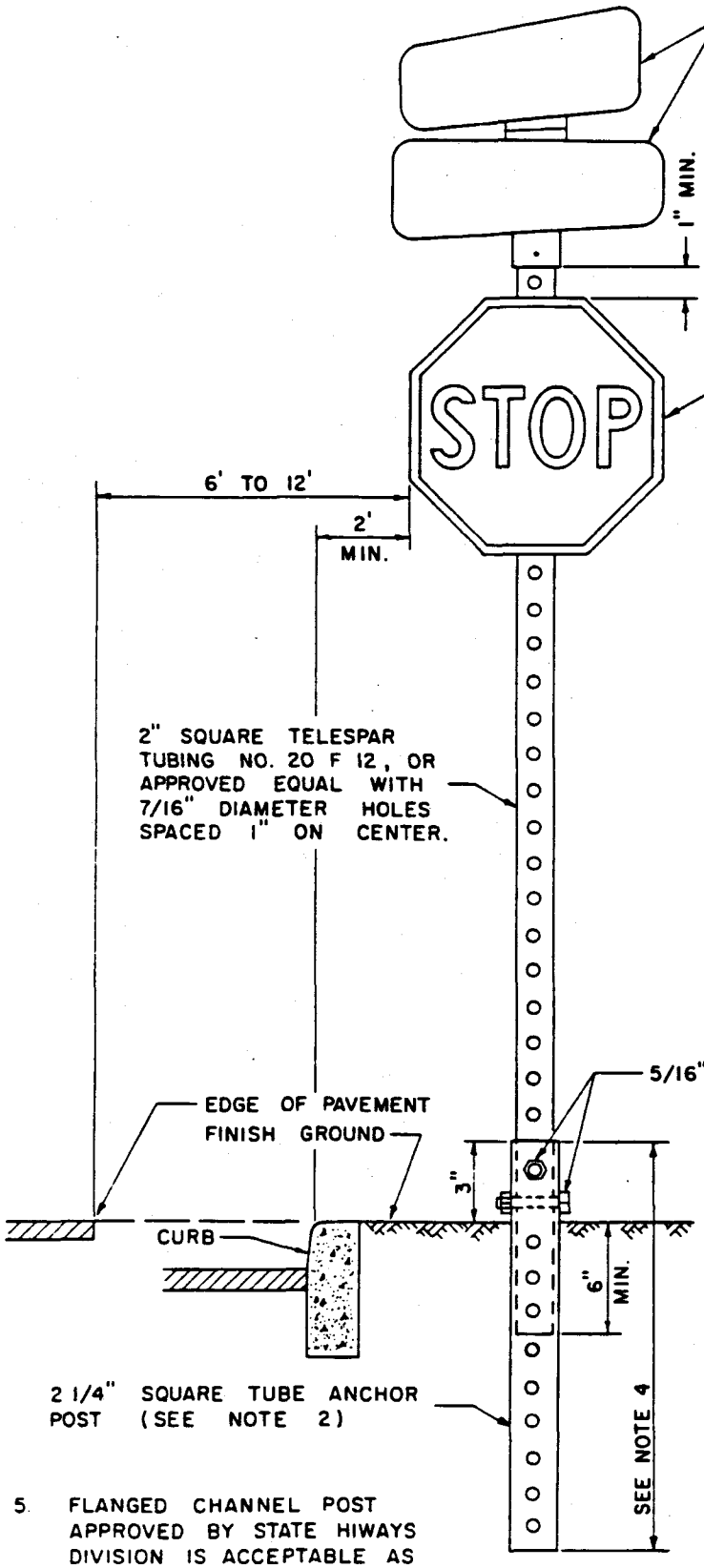

STREET NAME PLATES

SCOTCHLITE REFLECTIVE SHEETING NO. 3277, GREEN, WIDE ANGLE, FLAT TOP OR APPROVED EQUAL. LETTERS SHALL BE 4" WHITE SCOTCHLITE NO. 3290 OR NO. 2290, OR APPROVED EQUAL.

SIGN PLATES

0.080" MINIMUM THICKNESS, ALUMINUM SHEET (ASTM B 209, ALLOY 6061-T6, FLAT SHEET).

STOP SIGN, FACING MINOR ROAD. HIGH INTENSITY REFLECTIVE SHEETING. (REFER TO D.P.W. FOR SPECIFICATIONS)

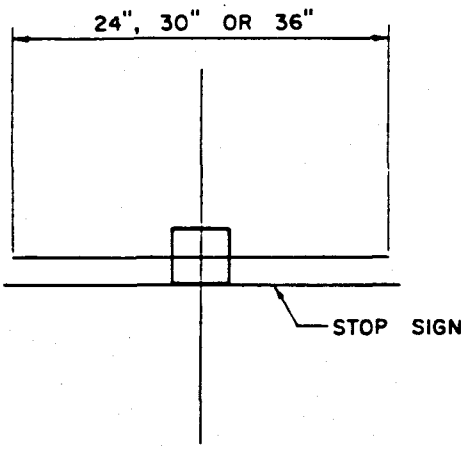

NOTES

1. THE INSIDE OF THE 2 1/4" ANCHOR POST MUST BE KEPT FREE OF IMPEDIMENTS TO ASSURE EASY INSERTION OF THE 2" SIGN POST.
2. SQUARE TUBE POSTS SHALL BE TELESCOPING PERFORATED TELESPAR TUBING OR APPROVED EQUAL.
3. THE EXACT SIGN DIMENSION WILL BE IN CONFORMANCE WITH THE CURRENT MUTCD, AS AMENDED, OR AS DESIGNATED ON THE PLANS OR BY THE ENGINEER.
4. THE 2 1/4" ANCHOR POST SHALL BE 4' LONG FOR NORMAL OR POOR GROUND CONDITIONS AND 30" FOR ROCKY CONDITIONS.
5. FLANGED CHANNEL POST APPROVED BY STATE HIWAYS DIVISION IS ACCEPTABLE AS APPROVED EQUAL FOR 2" SQUARE TUBING.
6. SIGN POST MUST BE FIRM AND NOT SHAKY, OTHERWISE CONCRETE MUST BE USED TO STABILIZE THE ANCHOR POST.

COUNTY OF MAUI COUNTY OF HAWAII	STREET NAME AND STOP SIGN DETAILS NOT TO SCALE SEPTEMBER 1984	STANDARD DETAILS	T-1

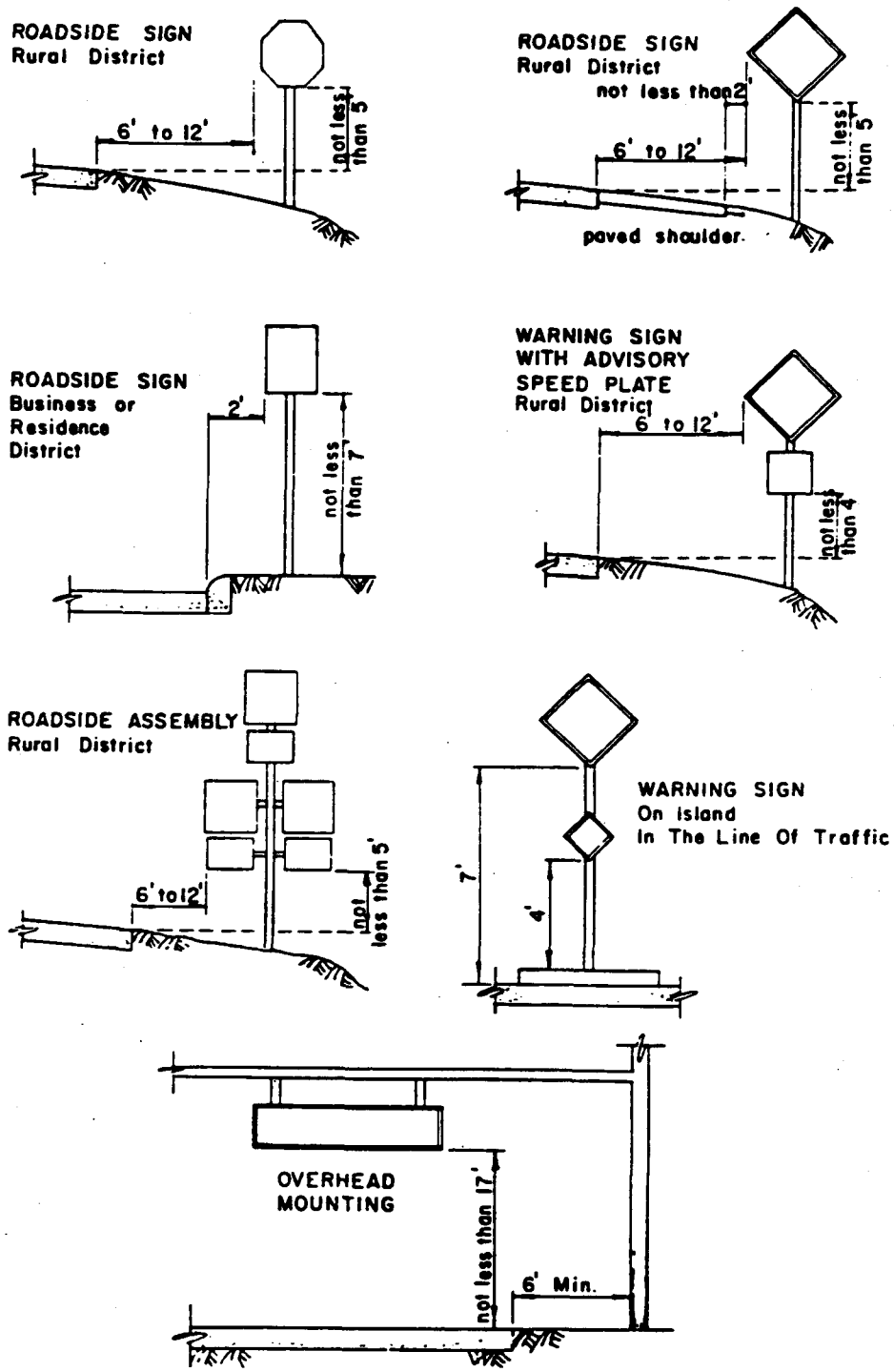

HEIGHT AND LATERAL LOCATION OF SIGNS

(TYPICAL INSTALLATIONS)

T-2	STANDARD DETAILS	HEIGHT AND LATERAL LOCATION OF SIGN SEPTEMBER 1984 NOT TO SCALE	COUNTY OF KAUAI COUNTY OF MAUI COUNTY OF HAWAII

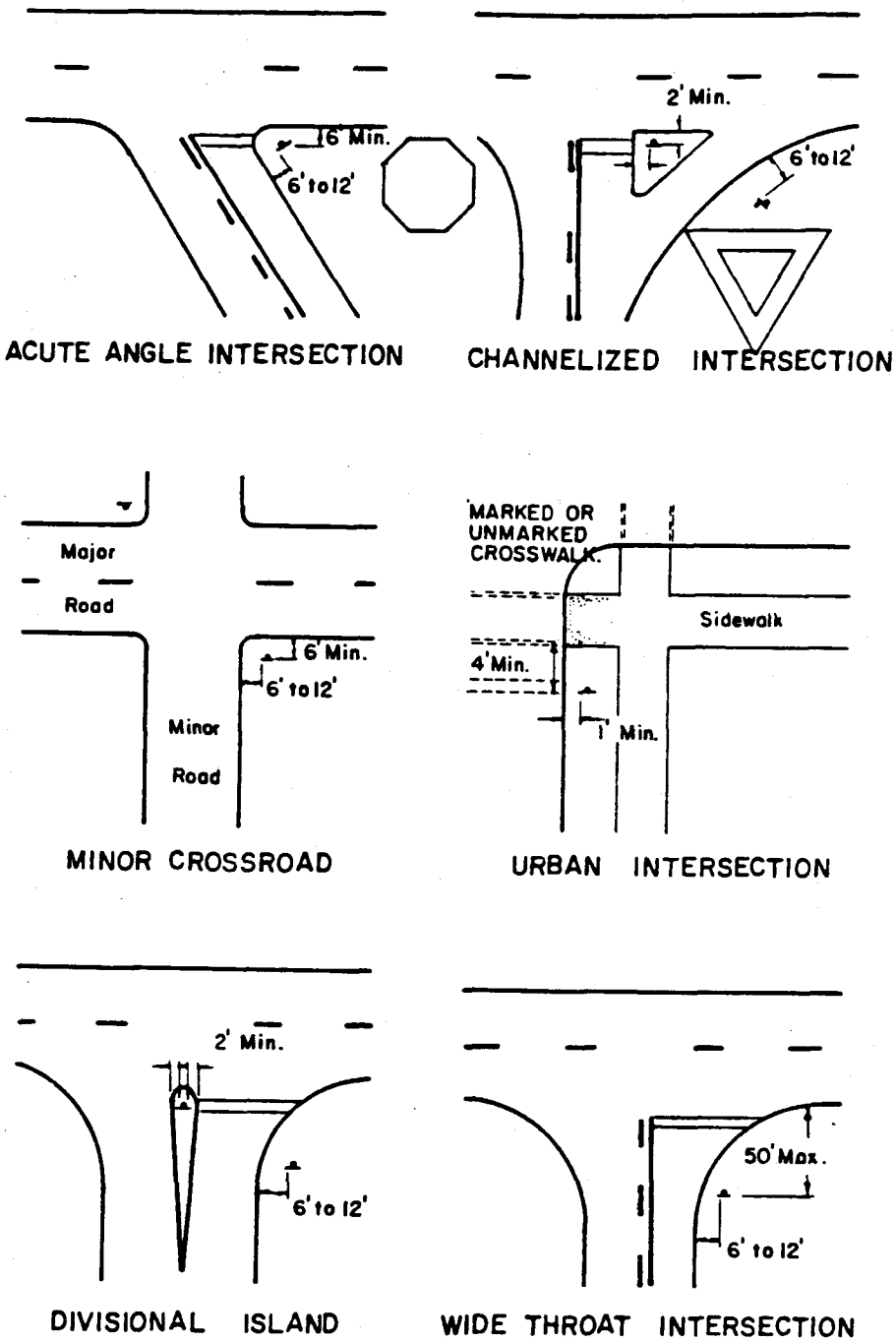

TYPICAL LOCATIONS FOR STOP SIGNS AND YIELD SIGNS

(TYPICAL INSTALLATIONS)

COUNTY OF KAUAI COUNTY OF MAUI COUNTY OF HAWAII	TYPICAL LOCATIONS FOR STOP SIGNS NOT TO SCALE SEPTEMBER 1984	STANDARD DETAILS	T-3

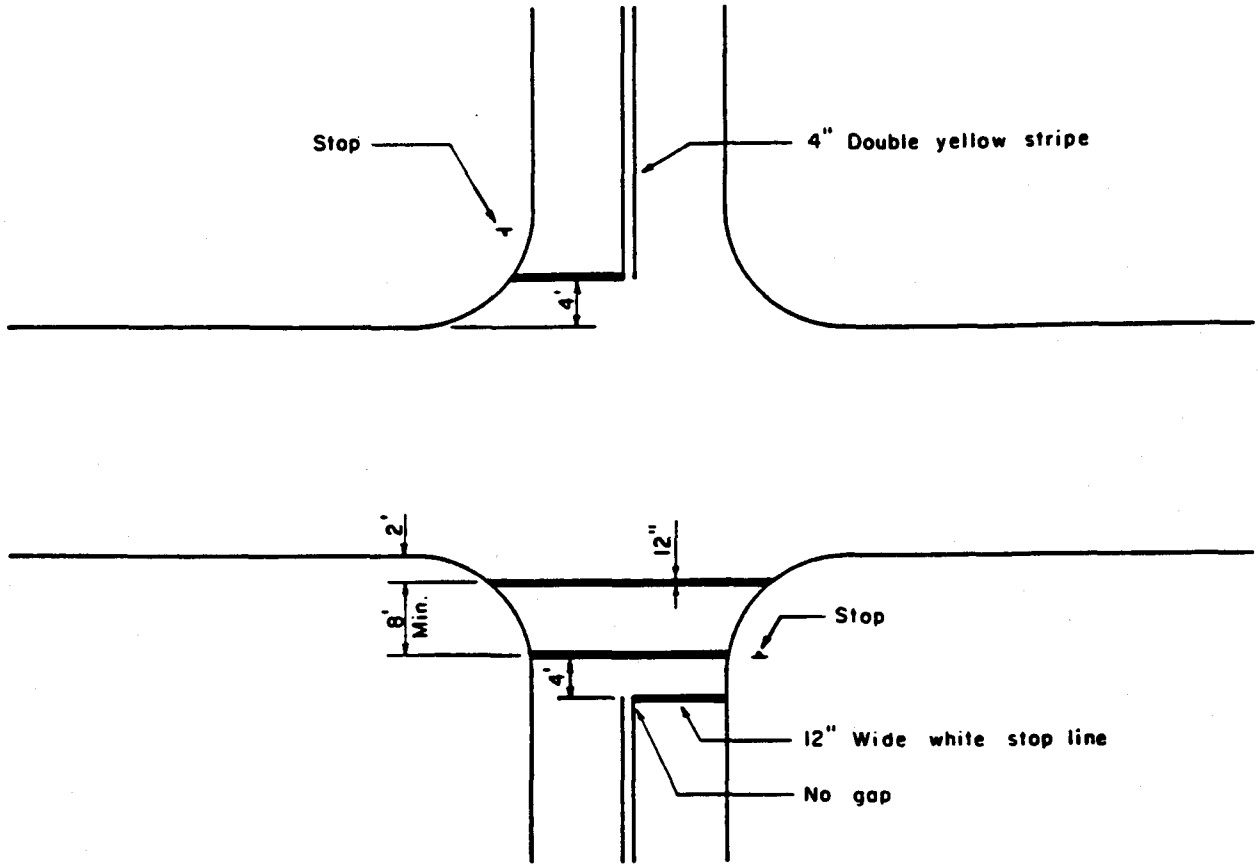

AT INTERSECTION

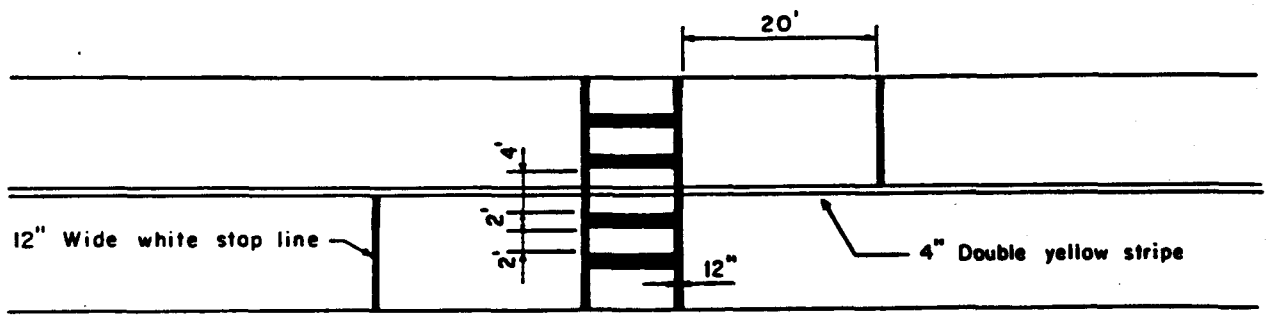

MIDBLOCK

T-4	STANDARD DETAILS	TYPICAL DETAIL FOR CROSSWALK AND STOP LINES SEPTEMBER 1984 NOT TO SCALE	COUNTY OF HAWAII

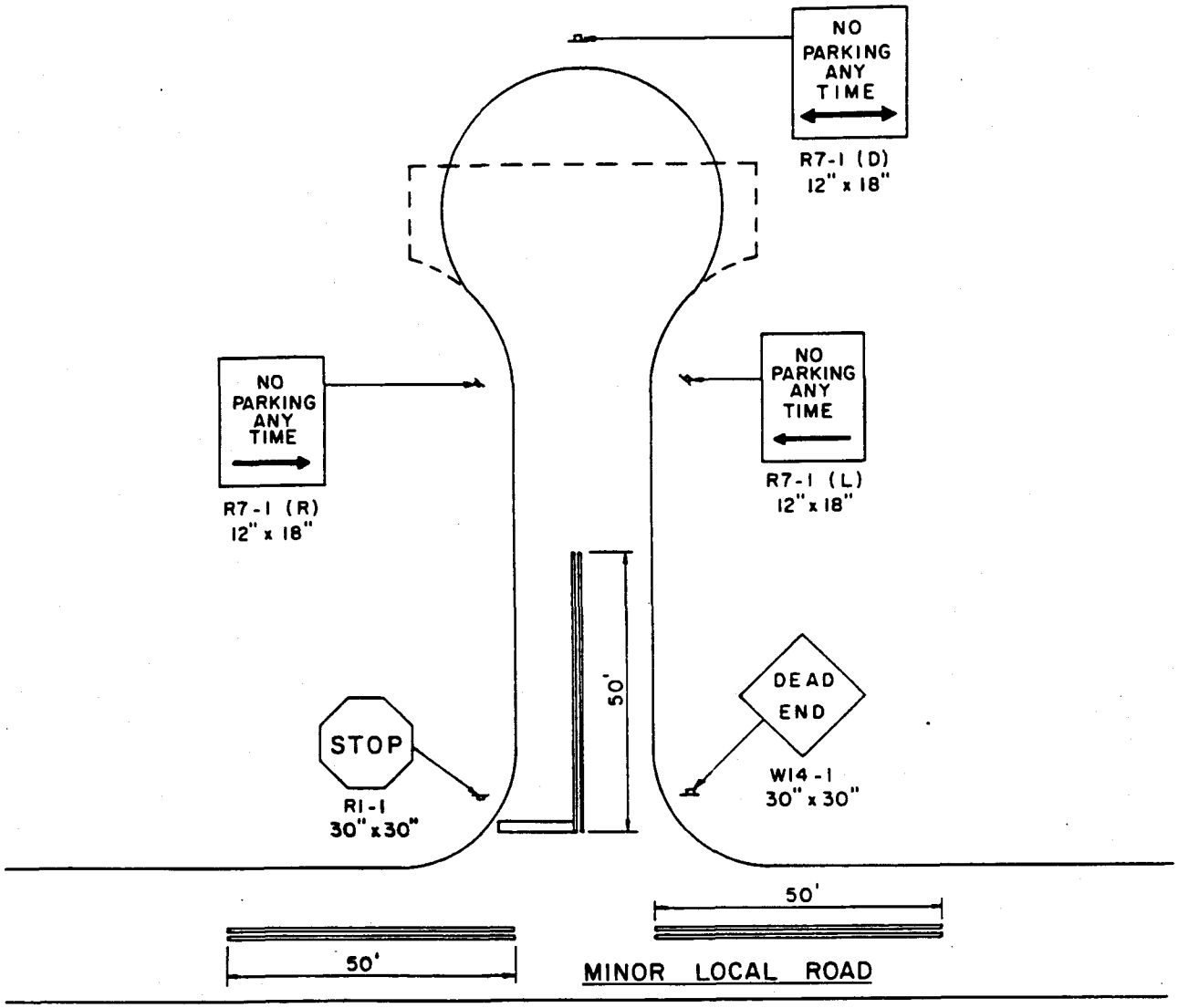

NOTES:

1. Three R7-1 signs required. Location of signs dependent on lot frontages onto the cul-de-sac.
2. Where a system of streets has only a single access, a "NO OUTLET" (W14-2, 30" x 30") sign must be installed at the access intersection in a similar location as sign W14-1 shown in this drawing.
3. Sign W14-1 (or W14-2) to be located so as to be easily visible from the thru-street.
4. Refer to sheets T-1, T-2, and T-3 for height and lateral clearance for signs.

COUNTY OF MAUI COUNTY OF HAWAII	TYPICAL SIGN INSTALLATIONS IN CUL-DE-SACS NOT TO SCALE SEPTEMBER 1984	STANDARD DETAILS	T-5

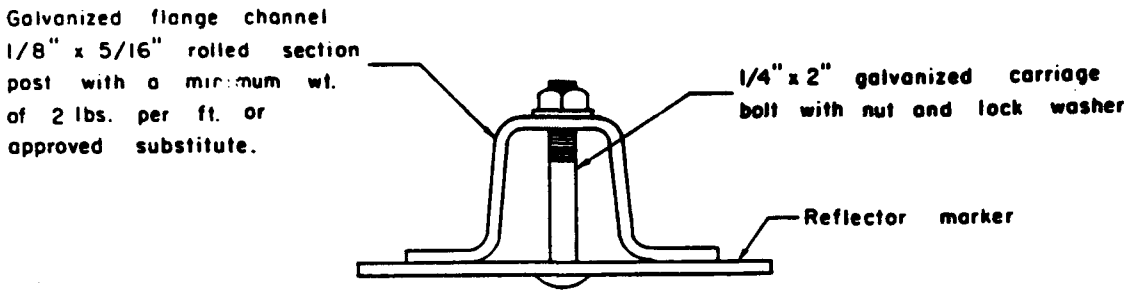

TYPICAL SECTION

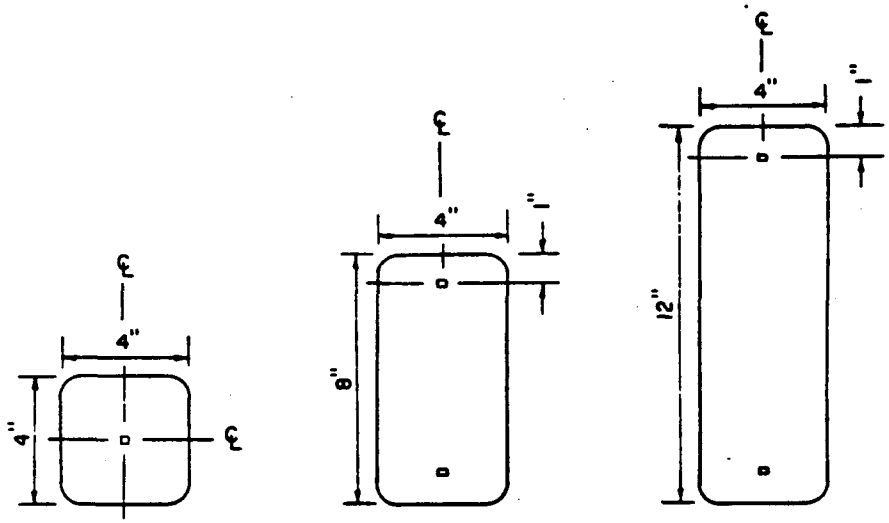

RM-1 WHITE

RM-2 YELLOW

RM-3 YELLOW

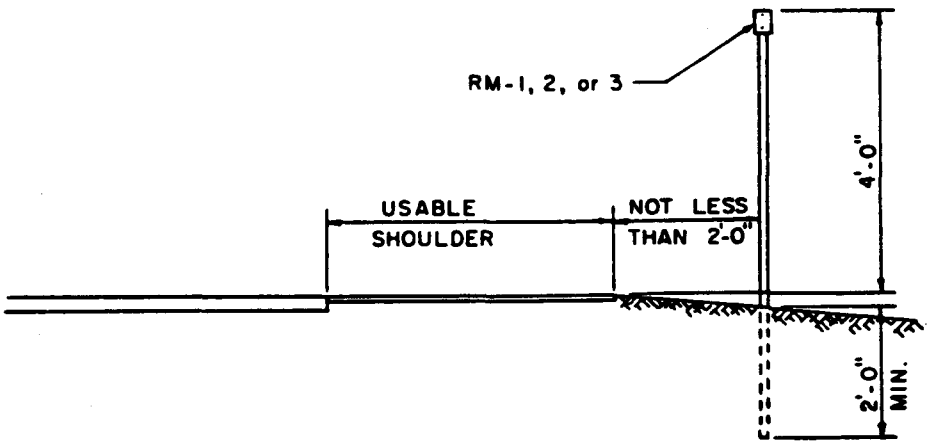

SECTION

T-6	STANDARD DETAILS	ROAD MARKER SEPTEMBER 1984 NOT TO SCALE	COUNTY OF KAUAI COUNTY OF MAUI COUNTY OF HAWAII

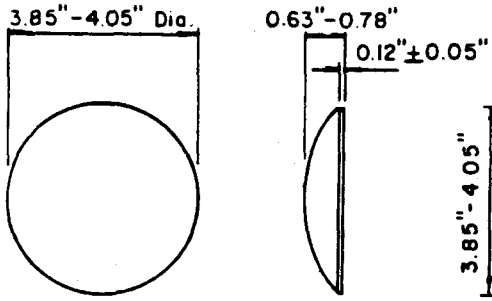

TYPE A
NON-REFLECTIVE WHITE MARKER

TYPE J
NON-REFLECTIVE YELLOW MARKER

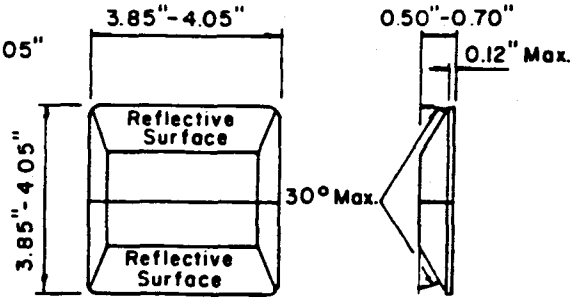

TYPE C
RED-CLEAR REFLECTIVE MARKER

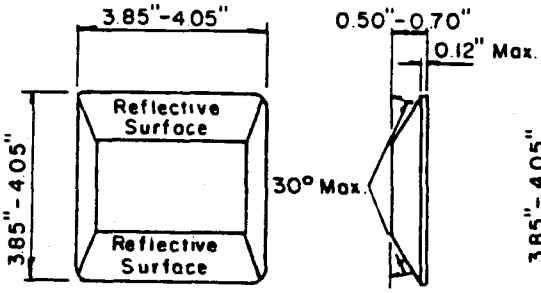

TYPE D
TWO-WAY YELLOW REFLECTIVE MARKER

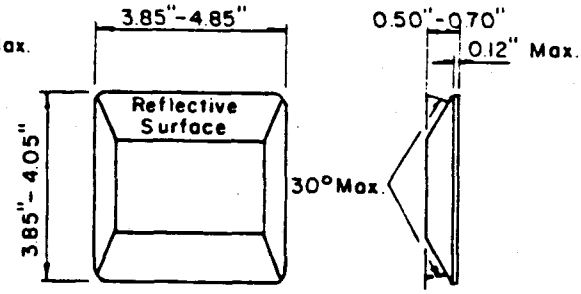

TYPE H
ONE-WAY YELLOW REFLECTIVE MARKER

RAISED PAVEMENT MARKERS

COUNTY OF KAUAI COUNTY OF MAUI COUNTY OF HAWAII	RAISED PAVEMENT MARKERS NOT TO SCALE SEPTEMBER 1984	STANDARD DETAILS	T-7

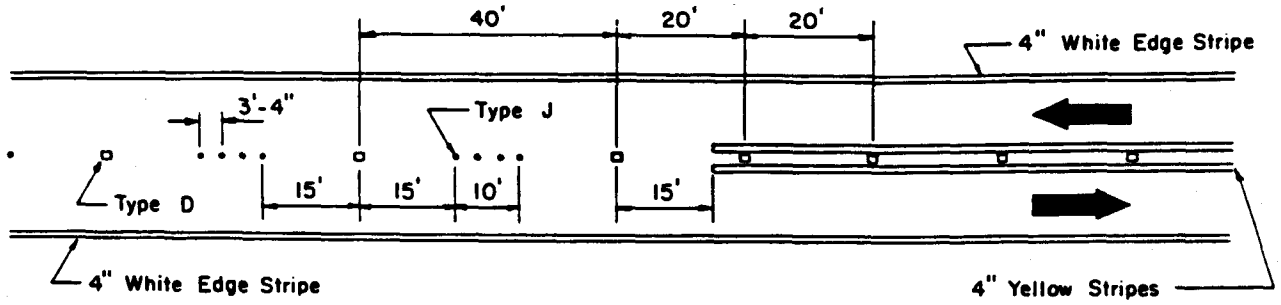

TWO-LANE
PASSING PERMITTED AND PASSING PROHIBITED

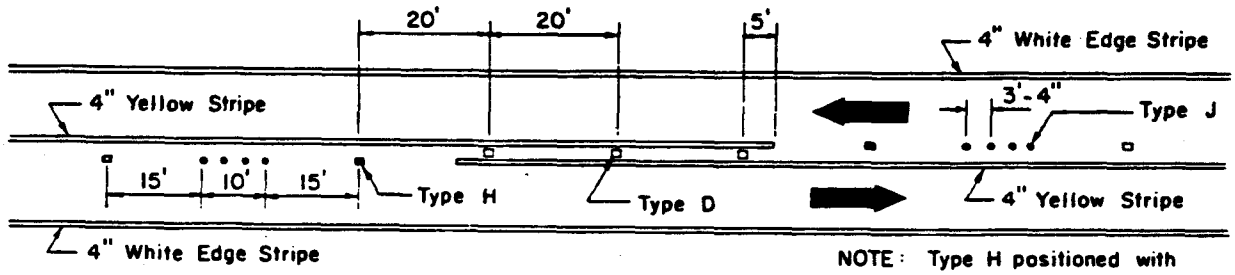

NOTE: Type H positioned with reflective surface facing No-Passing direction.

TWO-LANE
PASSING PROHIBITED ZONES

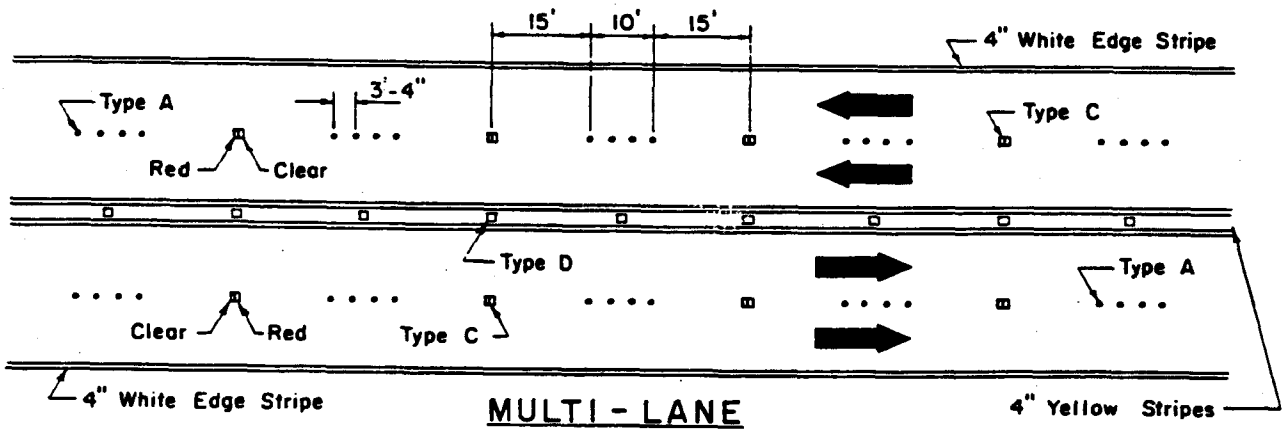

MULTI-LANE
LANE LINES AND CENTER LINE

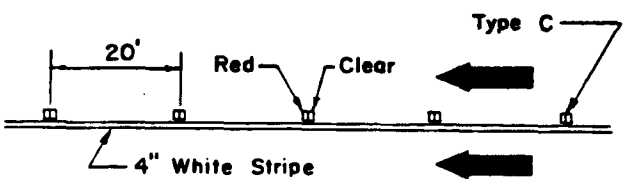

CHANNELIZING LINES OR SOLID LANE LINES

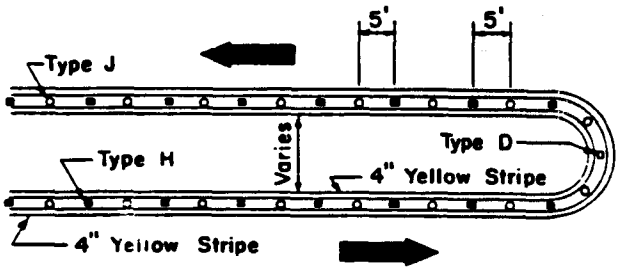

NOTE: Type H positioned with reflective surface facing oncoming traffic.

MEDIAN NOSE DELINEATION

T-8	STANDARD DETAILS	TYPICAL INSTALLATION OF RAISED PAVEMENT MARKERS SEPTEMBER 1984 NOT TO SCALE	COUNTY OF KAUAI COUNTY OF MAUI COUNTY OF HAWAII

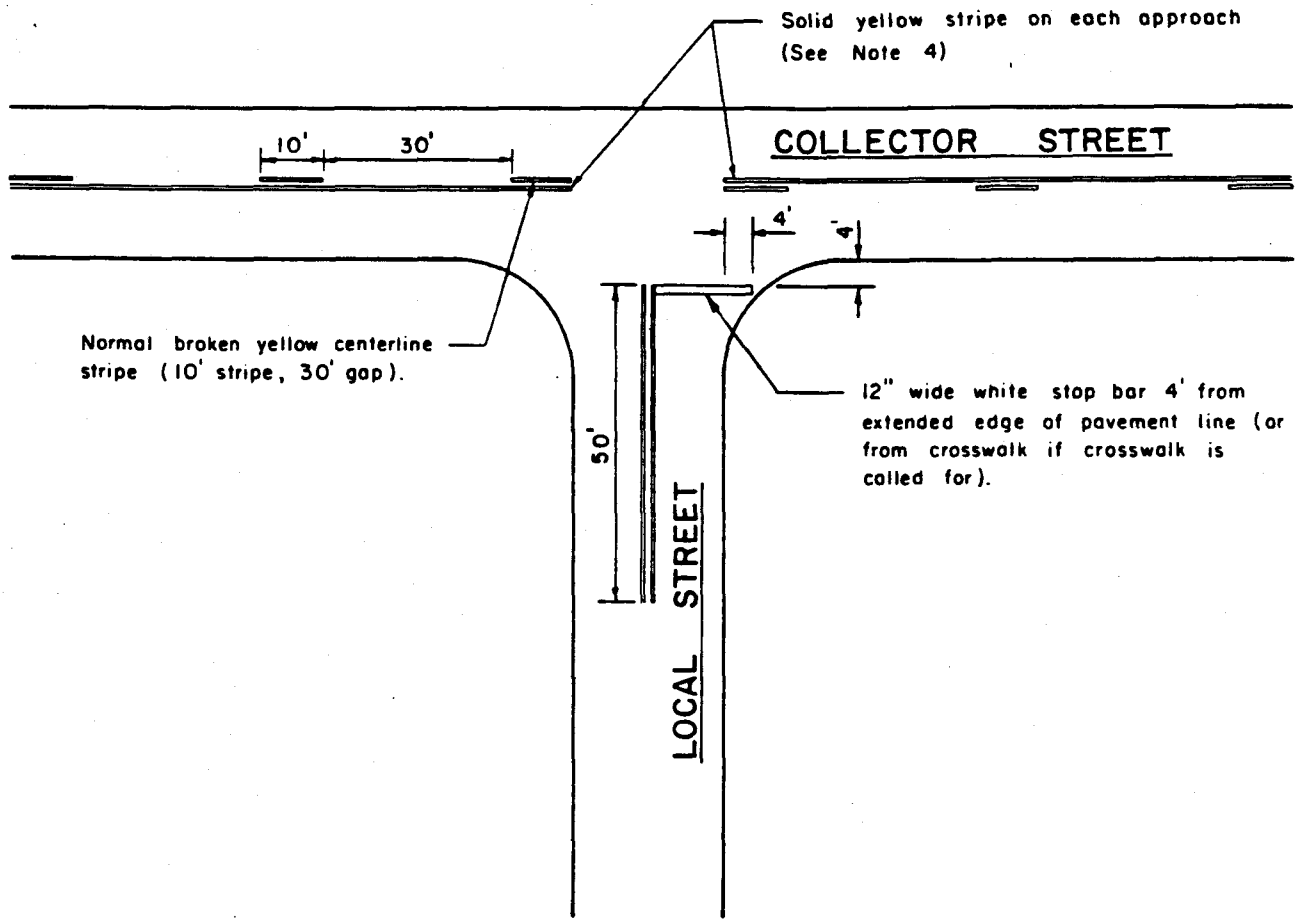

STRIPING NOTES:

1. All striping shall conform to the latest edition of the "MANUAL ON UNIFORM TRAFFIC CONTROL DEVICES for Streets and Highways" (MUTCD).
2. Yellow centerlines shall be striped on all two-way collector or higher streets.
3. 12" white "STOP" lines shall be striped in conjunction with each "STOP" sign.
4. Appropriate "NO PASSING" markings shall be striped for 130' when collector speed limit is 30 mph or less and 170' when collector speed limit is 35 mph or more on each approach to an intersection and or as otherwise called for and at other locations designated in the MUTCD.
5. All traffic paint shall be reflectorized and shall be approved by the Engineer.

COUNTY OF KAUAI COUNTY OF MAUI COUNTY OF HAWAII	TYPICAL INTERSECTION DETAIL FOR STRIPING NOT TO SCALE SEPTEMBER 1984	STANDARD DETAILS	T-9

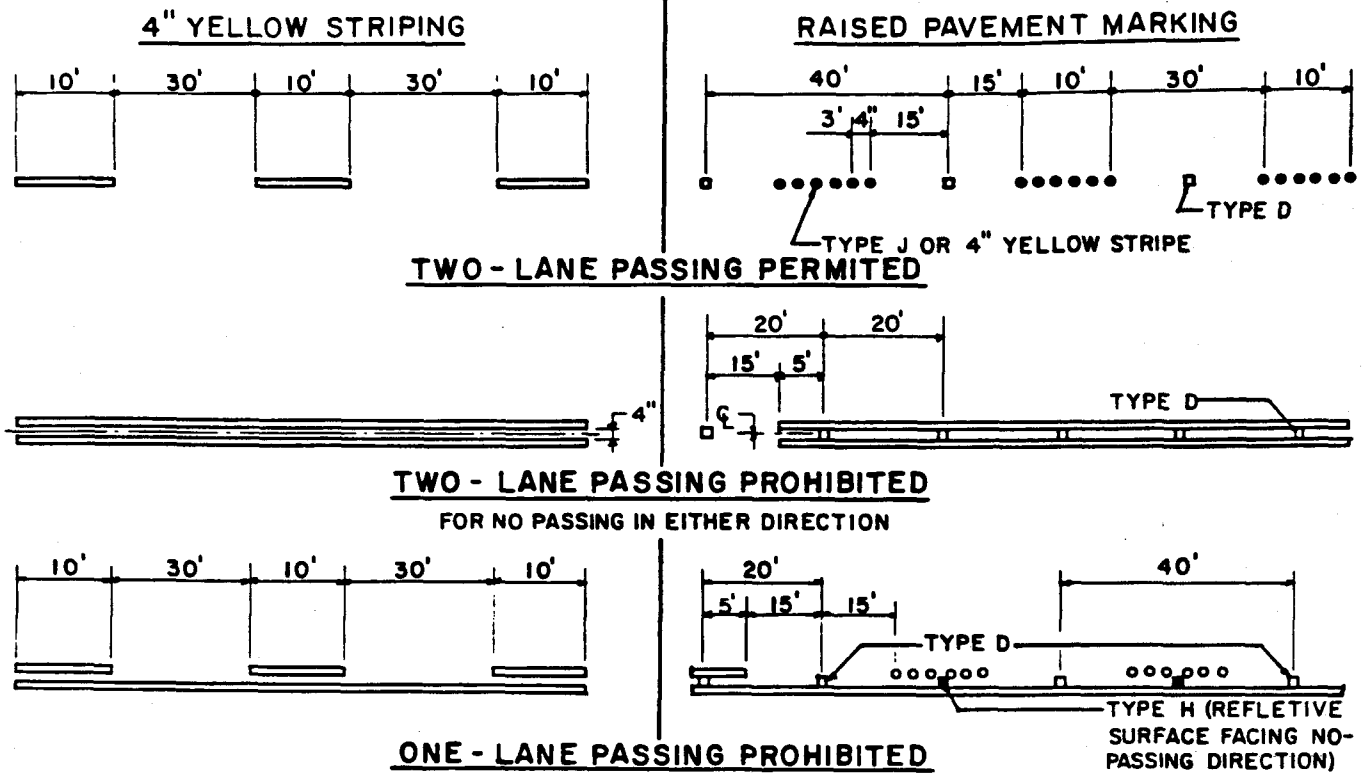

STANDARD TRAFFIC STRIPES

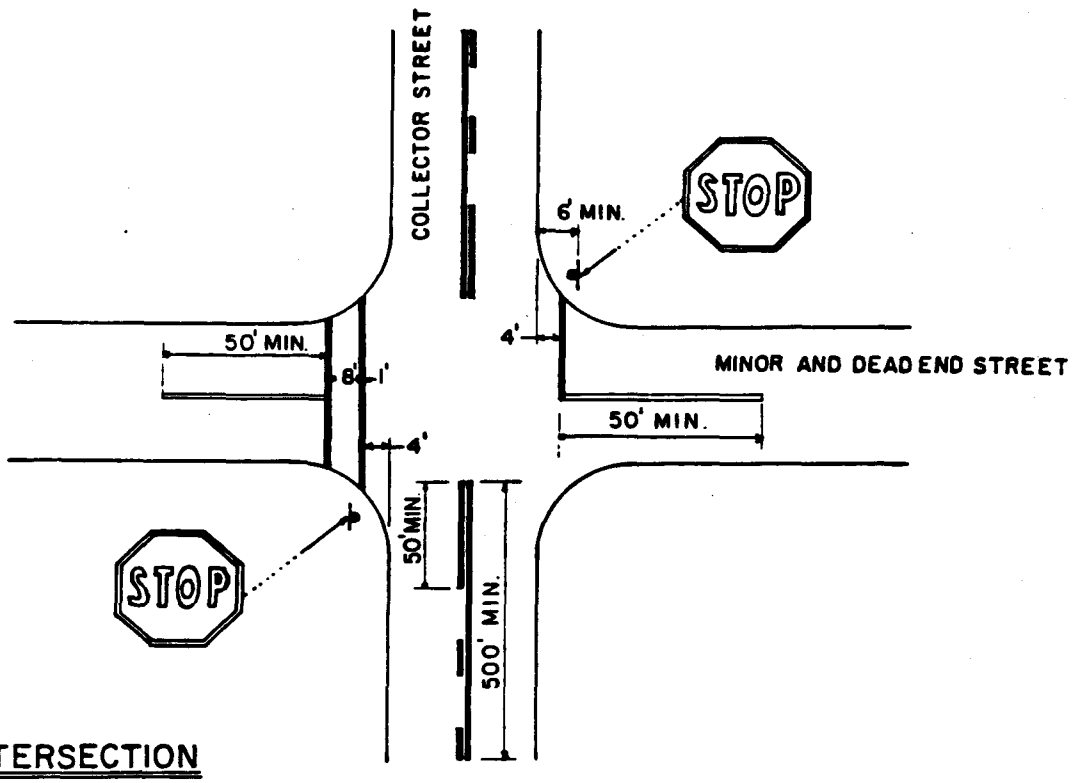

INTERSECTION OF TWO-LANE ROADS

T-10	STANDARD DETAILS	STRIPING DETAILS SEPTEMBER 1984 NOT TO SCALE	COUNTY OF KAUAI

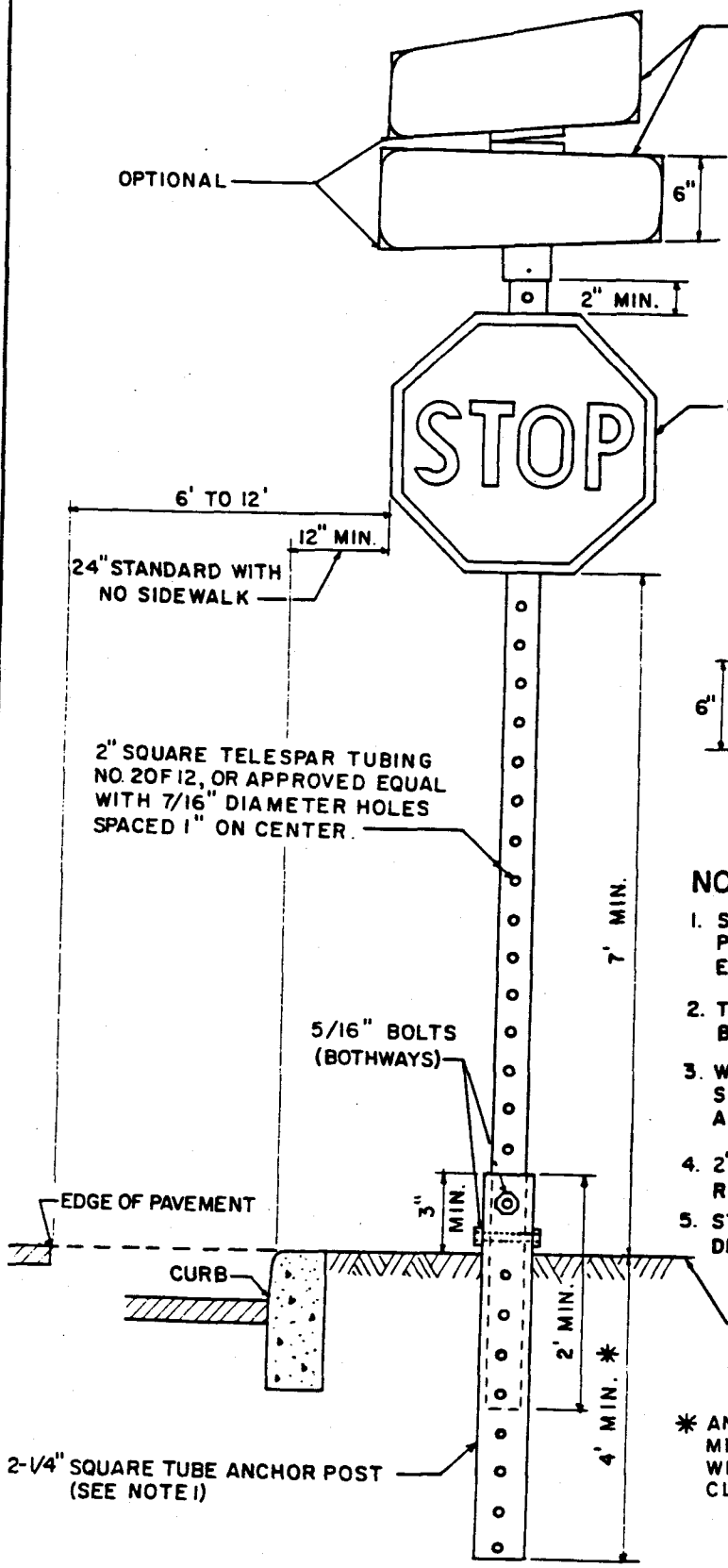

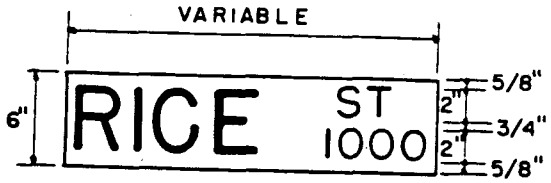

STREET NAME PLATE DETAIL

NOTES:

1. SQUARE TUBE POSTS SHALL BE TELESCOPING PERFORATED TELESPAR TUBING OR APPROVED EQUAL.
2. THE EXACT SIGN LOCATION WILL BE DESIGNATED BY THE ENGINEER.
3. WHERE ANCHOR POST IS TO BE OMITTED, POST SHALL BE BURIED 2'-6" MIN. AND CONCRETED AROUND IF NECESSARY.
4. 2" LETTERS SHALL BE USED FOR ST., DR., HWY., RD.... ETC.
5. STREET NUMBER TO BE DESIGNATED BY THE DEPARTMENT OF PUBLIC WORKS.

* ANCHOR POST CAN BE INSTALLED AT A MINIMUM DEPTH OF 24" IF ENCASED WITH A 14" SQUARE OR CIRCULAR SHAPED CLASS B CONCRETE ANCHOR.

COUNTY OF KAUAI	STREET NAME AND STOP SIGN DETAILS NOT TO SCALE SEPTEMBER 1984	STANDARD DETAILS	T-11

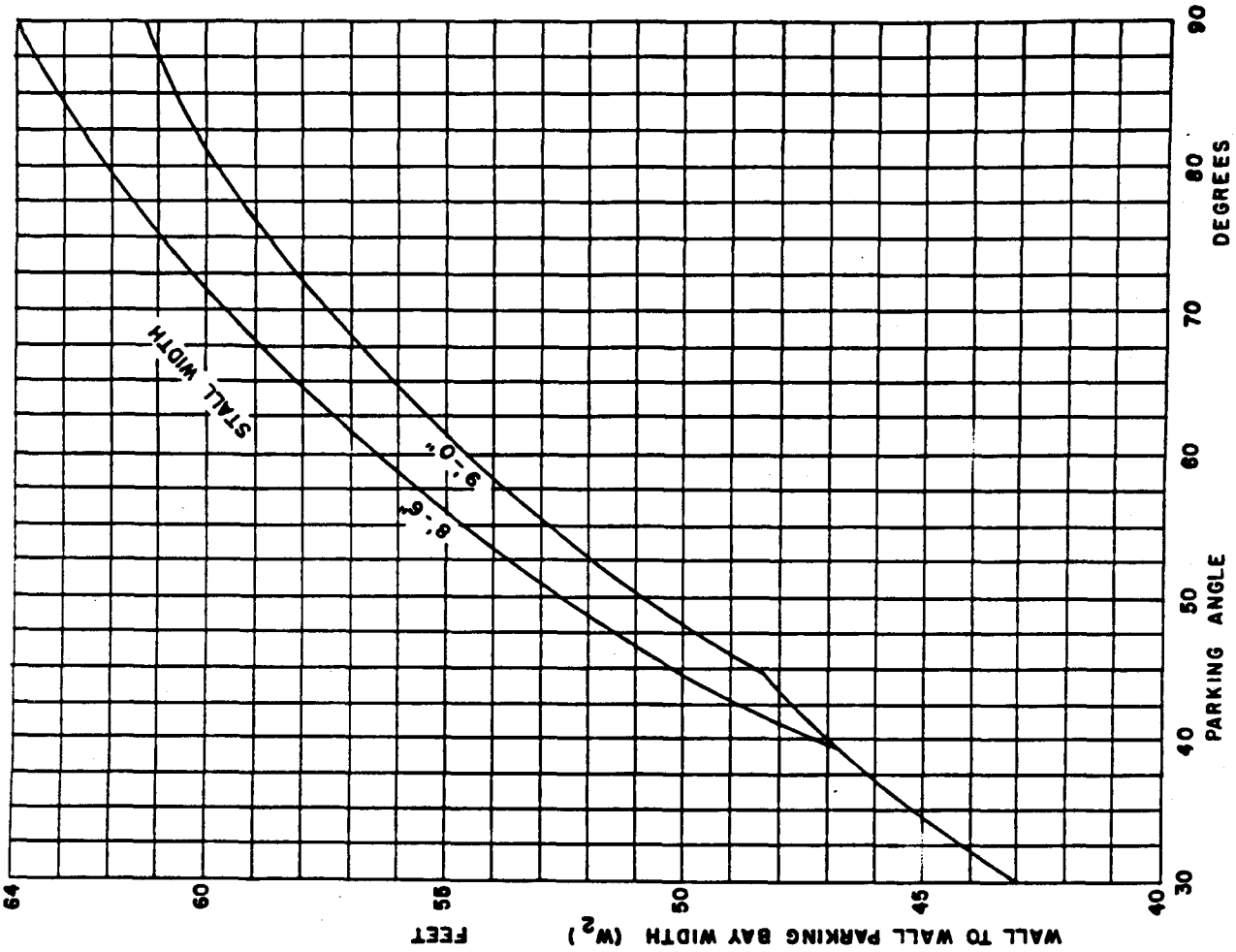

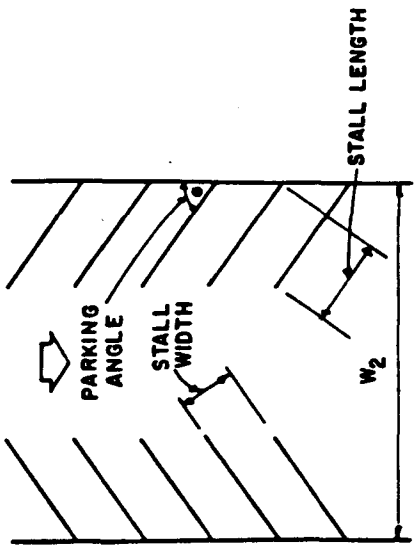

Notes:

STANDARD VEHICLE

1. MINIMUM STALL WIDTH = 8'-6"
2. MINIMUM STALL LENGTH = 19'-0"

COMPACT VEHICLE

1. MINIMUM STALL WIDTH = 7'-6"
2. MINIMUM STALL LENGTH = 16'-0"

T-12	STANDARD DETAILS	PARKING DESIGN STANDARD, ONE-WAY TRAFFIC SEPTEMBER 1984 NOT TO SCALE	COUNTY OF KAUAI

COUNTY OF KAUAI

PARKING DESIGN STANDARD, TWO-WAY TRAFFIC

NOT TO SCALE

SEPTEMBER 1984

STANDARD DETAILS

T-13

Notes:

STANDARD VEHICLE

1. MINIMUM STALL WIDTH = 8'-6"
2. MINIMUM STALL LENGTH = 19'-0"
3. IN CURBED ISLAND DESIGN, DEDUCT OVERHANG CLEARANCE FROM W_2.

COMPACT VEHICLE

1. MINIMUM STALL WIDTH = 7'-6"
2. MINIMUM STALL LENGTH = 16'-0"
3. IN CURBED ISLAND DESIGN, DEDUCT OVERHANG CLEARANCE FROM W_2.

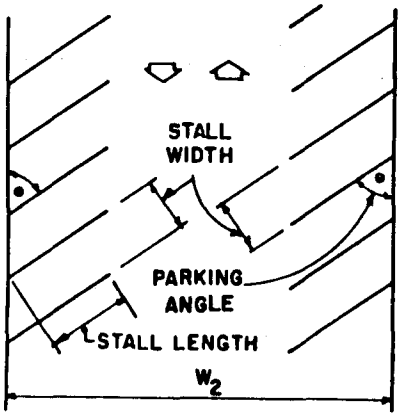

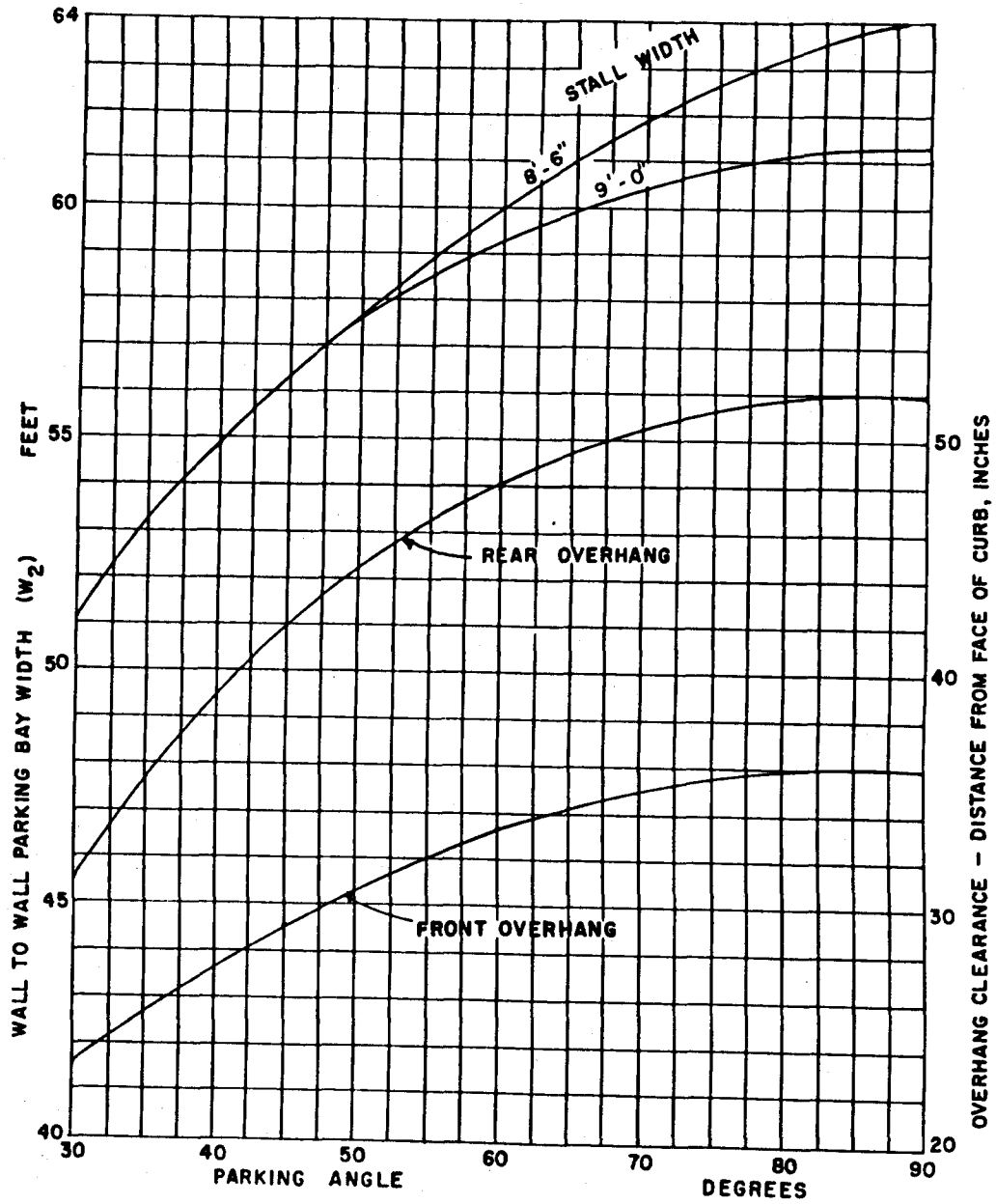

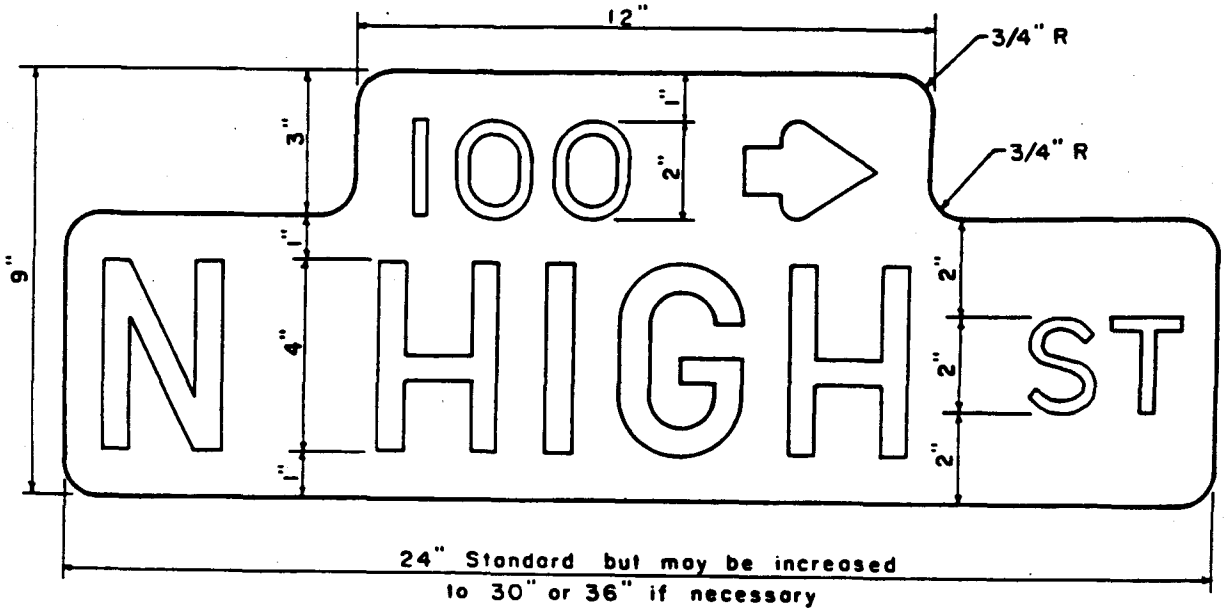

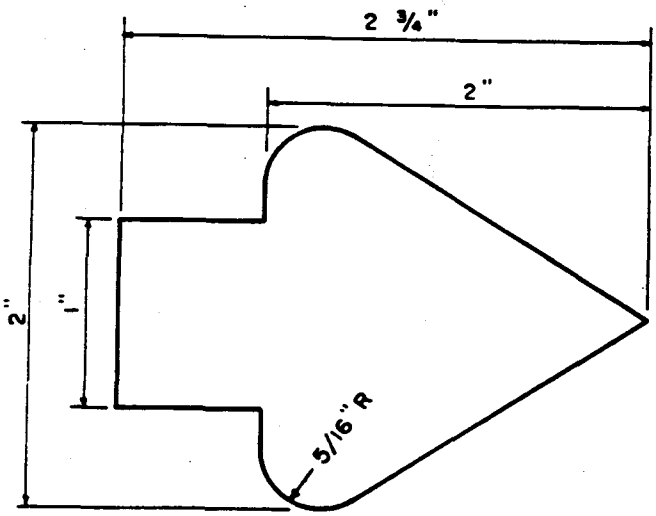

NOTES

1. Sign shall be 0.080" min. thickness alum. sheet (ASTM: B-209 alloy 6061-T6 as ammended flatsheet).
2. Reflective sheets shall be scotchlite sheeting #3277 green for face and scotchlite #2270 silver for letters and numbers or equal.

STANDARD STREET NAME SIGN

T-14	STANDARD DETAILS	STANDARD STREET NAME SIGN SEPTEMBER 1984 NOT TO SCALE	COUNTY OF MAUI