WASTEWATER SYSTEM

STANDARD DETAILS

CITY AND COUNTY OF HONOLULU

July 2017

STANDARD DETAILS – TABLE OF CONTENTS

SHEET NO.	DETAIL TITLE
S–01	TYPICAL GRAVITY SEWER TRENCH
S–02	TRENCH PAYMENT WIDTH AND PIPE BEDDING DIMENSIONS
S–03	REINFORCED CONCRETE JACKET FOR PIPES 12–INCH AND SMALLER
S–04	LATERALS
S–05	ADVANCED RISER CONNECTION – TYPE 1 (PRIOR TO DETERMINING LATERAL INVERT)
S–06	ADVANCED RISER CONNECTION – TYPE 2 (AFTER LATERAL INVERT IS DETERMINED)
S–07	LATERAL CONNECTION TO EXISTING PIPE (SEWER MAINS 8–INCH TO 12–INCH)
S–08	LATERAL CONNECTION TO EXISTING PIPE (SEWER MAINS 12–INCH TO 16–INCH)
S–09	MANHOLE NOTES – 1
S–10	MANHOLE NOTES – 2
S–11	4–FOOT DIAMETER PRE–CAST CONCRETE MANHOLE
S–12	4–FOOT DIAMETER PRE–CAST CONCRETE MANHOLE – ALTERNATE BASE AND SECTION
S–13	CAST–IN–PLACE MANHOLE BASE JOINT
S–14	4–FOOT DIAMETER PRE–CAST CONCRETE SHALLOW MANHOLE
S–15	STEEL REINFORCED POLYMER CONCRETE MANHOLE
S–16	6–FOOT DIAMETER PRE–CAST CONCRETE MANHOLE
S–17	DROP MANHOLE FOR DROPS OVER 5–FEET (INVERT TO INVERT)
S–18	DROP MANHOLE SECTIONS
S–19	SHALLOW INSIDE DROP MANHOLE (SEWER MAINS 12–INCH AND SMALLER)
S–20	FORCE MAIN TRANSITION MANHOLE
S–21	PLAN – FORCE MAIN DISCHARGE MANHOLE FLOW CHANNELIZATION
S–22	PRE–CAST CONCRETE ECCENTRIC MANHOLE CONE
S–23	MANHOLE PIPE CONNECTION – WALL PIPE FITTING
S–24	MANHOLE PIPE CONNECTION – RESILIENT CONNECTOR
S–25	TYPICAL CHANNELIZATION OF SEWER MANHOLES
S–26	4–FOOT DIAMETER PRE–CAST CONCRETE MANHOLE SECTIONS
S–27	6–FOOT DIAMETER PRE–CAST CONCRETE MANHOLE SECTIONS
S–28	GRADE RING, LEVEL ADJUSTMENT, AND MANHOLE COVER LOCATED IN A.C. PAVEMENT
S–29	MANHOLE FRAME AND COVER LOCATED IN UNPAVED AREAS
S–30	MANHOLE COVER – TYPE SA
S–31	MANHOLE FRAME – TYPE SA
S–32	MANHOLE COVER – TYPE SB, TOP VIEW
S–33	MANHOLE COVER – TYPE SB, BOTTOM VIEW
S–34	MANHOLE FRAME – TYPE SB
S–35	DROP MANHOLE RISER CASTING

DATE: 7/2017

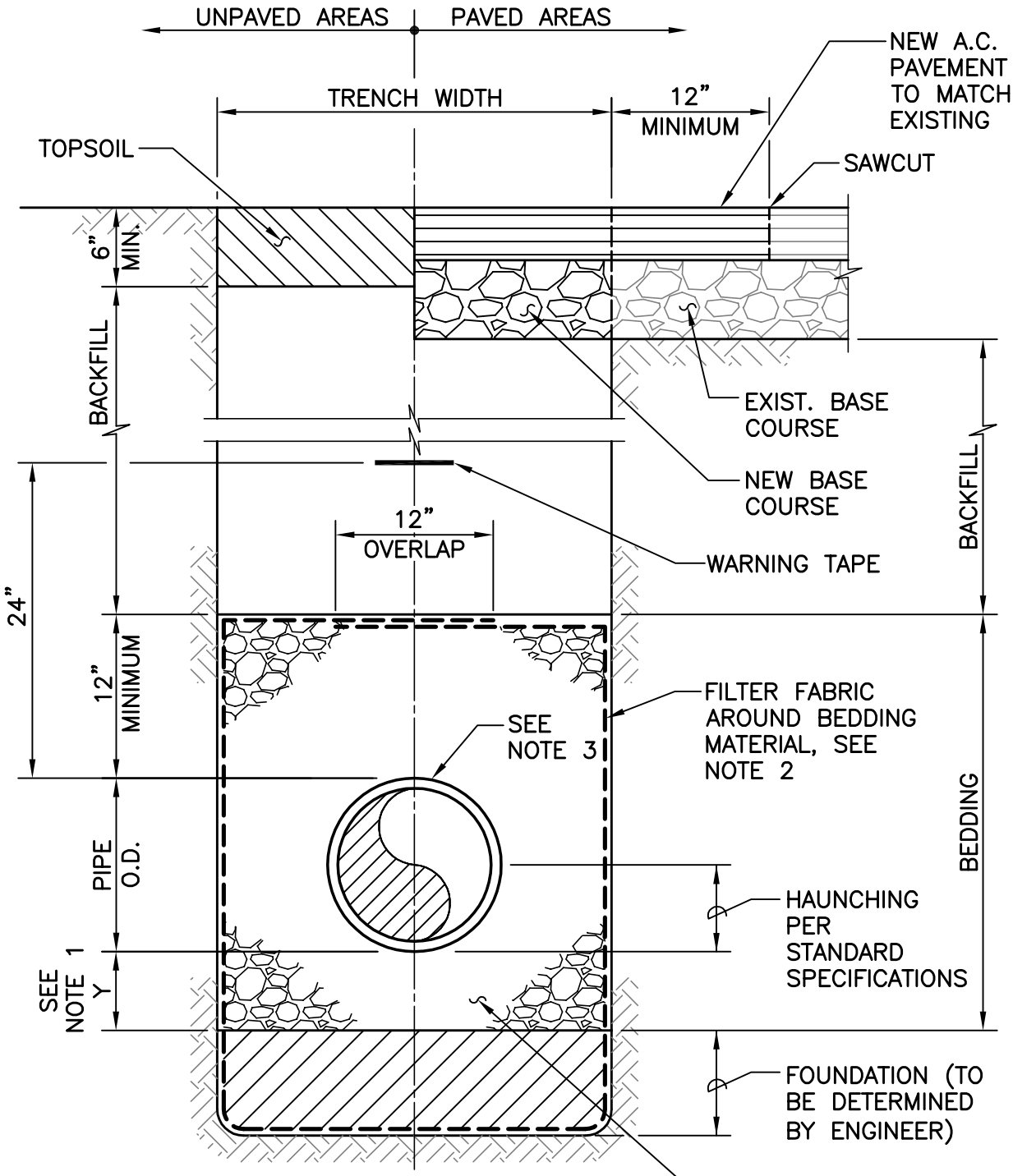

NOTES:

1. SEE S–02 FOR PAYMENT WIDTHS AND BEDDING DIMENSIONS.
2. FILTER FABRIC NOT REQUIRED FOR CLSM BEDDING.
3. FOR SEWER JOINTS LOCATED 5' BEYOND ANTICIPATED DRIP LINE OF TREES AND SHRUBS, WRAP WILL BE A GEOTEXTILE FABRIC WITH HERBICIDE

1' 0 1' 2'

SCALE: 1" = 1'–0"

DATE: 7/2017

CITY AND COUNTY OF HONOLULU	STANDARD DETAILS	TYPICAL GRAVITY SEWER TRENCH	S–01

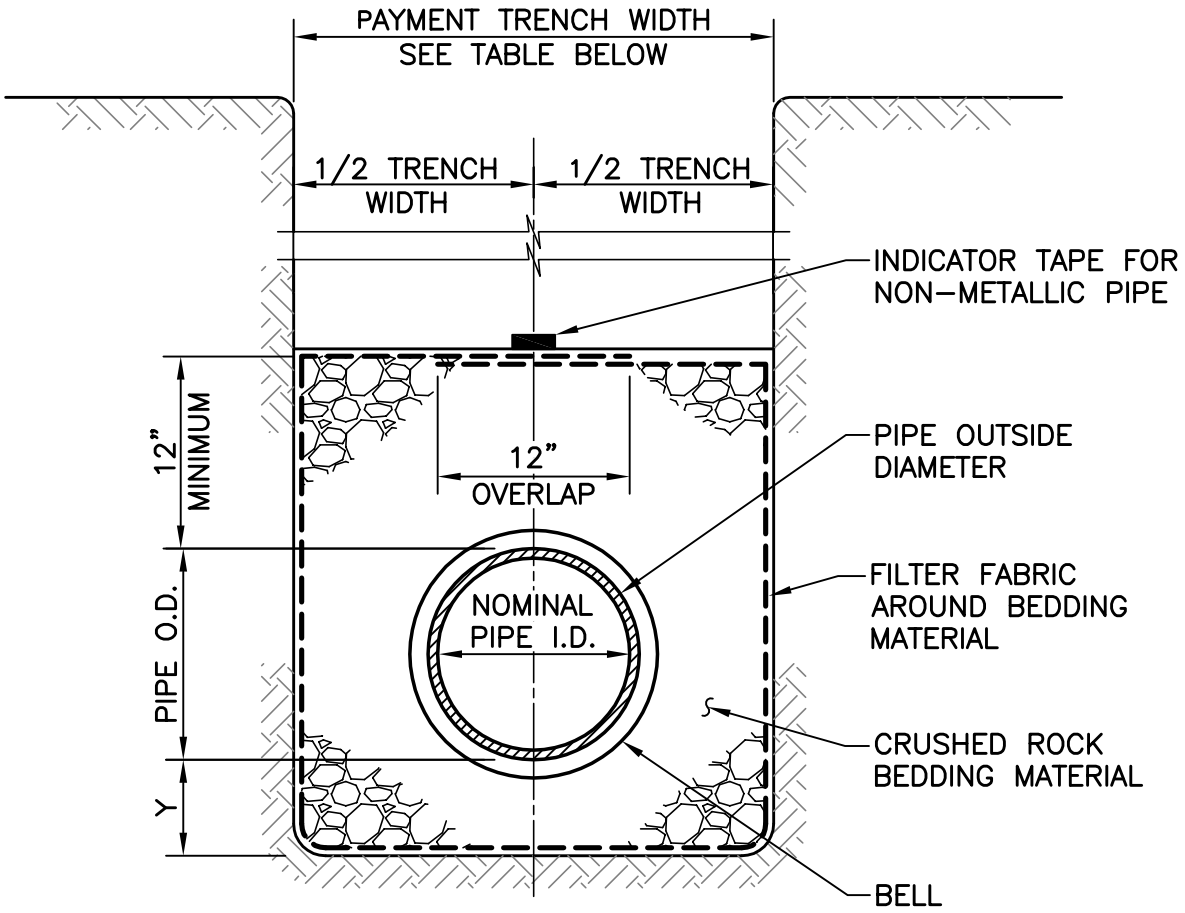

NOMINAL PIPE SIZE (INSIDE DIA.)	PAYMENT TRENCH WIDTH	CRUSHED ROCK BEDDING
		"Y" MINIMUM
6"	30"	6"
8"	30"	6"
10"	30"	6"
12"	30"	6"
16"	38"	6"
18"	41"	6"
24"	50"	8"
30"	57"	10"
36"	69"	11"
42"	76"	12"
48"	84"	12"
54"	91"	12"

1' 0 1' 2'

SCALE: 1" = 1'-0"

DATE: 7/2017

CITY AND COUNTY OF HONOLULU	STANDARD DETAILS	TRENCH PAYMENT WIDTH AND PIPE BEDDING DIMENSIONS	S-02

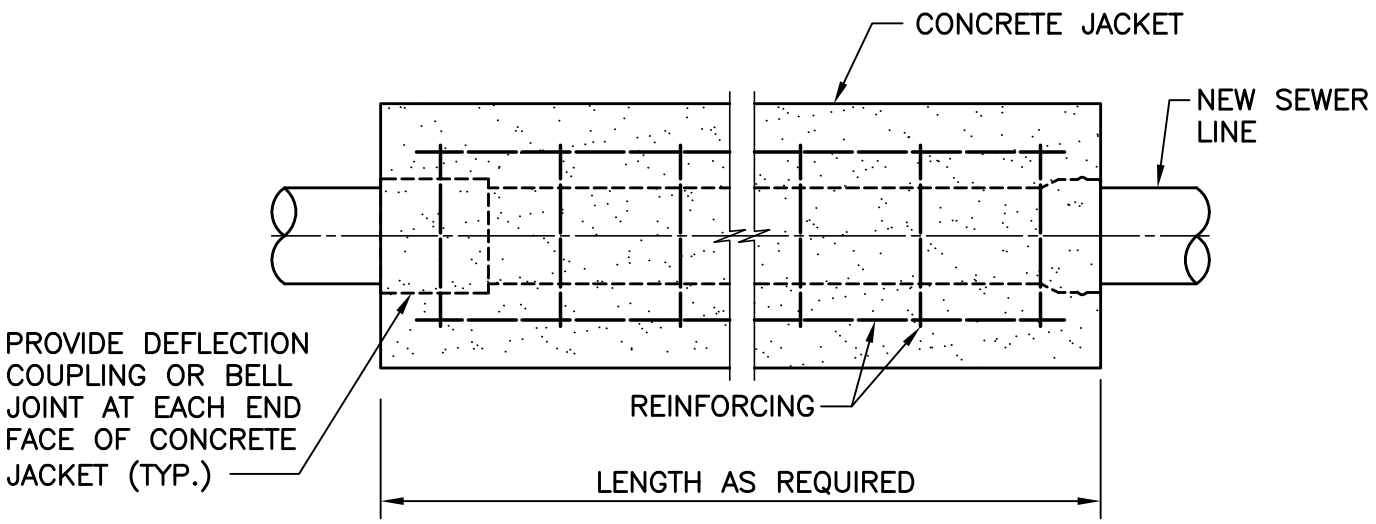

PLAN

4 – #4 ON 8" PIPES,
4 – #5 ON 10" AND 12" PIPES,
LARGER THAN 12", A SPECIAL DETAIL MUST BE SUBMITTED FOR APPROVAL

#3 HOOPS, 10" O.C., LAPPED 12", AT ENDS

FILTER FABRIC, MIN. 6" OVERLAP AT CONCRETE

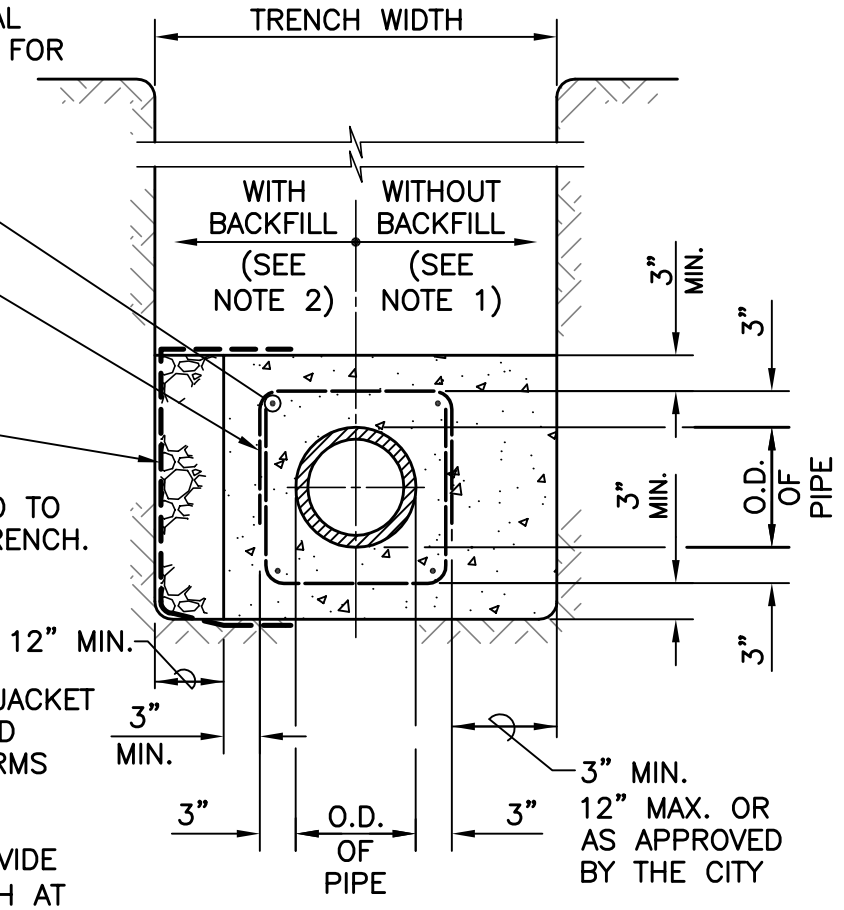

SECTION

NOTES:

1. CONCRETE JACKET MAY EXTEND TO TRENCH WALL FOR NARROW TRENCH. TRENCH WALL SHALL BE CUT VERTICAL AND NEAT.
2. FORMS SHALL BE USED FOR CONSTRUCTION OF CONCRETE JACKET IN WIDE TRENCH WITH CRUSHED ROCK BEDDING BACKFILL. FORMS SHALL BE REMOVED.
3. FOR EXISTING PVC PIPES, PROVIDE SANDED SURFACE 2' IN LENGTH AT EACH END PRIOR TO INSTALLING CONCRETE JACKET PER STANDARD SPECIFICATIONS. DEFLECTION COUPLING OR BELL NOT REQUIRED AT ENDS.

1' 0 1' 2' 3'

SCALE: 3/4" = 1'–0"

DATE: 7/2017

CITY AND COUNTY OF HONOLULU	STANDARD DETAILS	REINFORCED CONCRETE JACKET FOR PIPES 12–INCH AND SMALLER	S–03

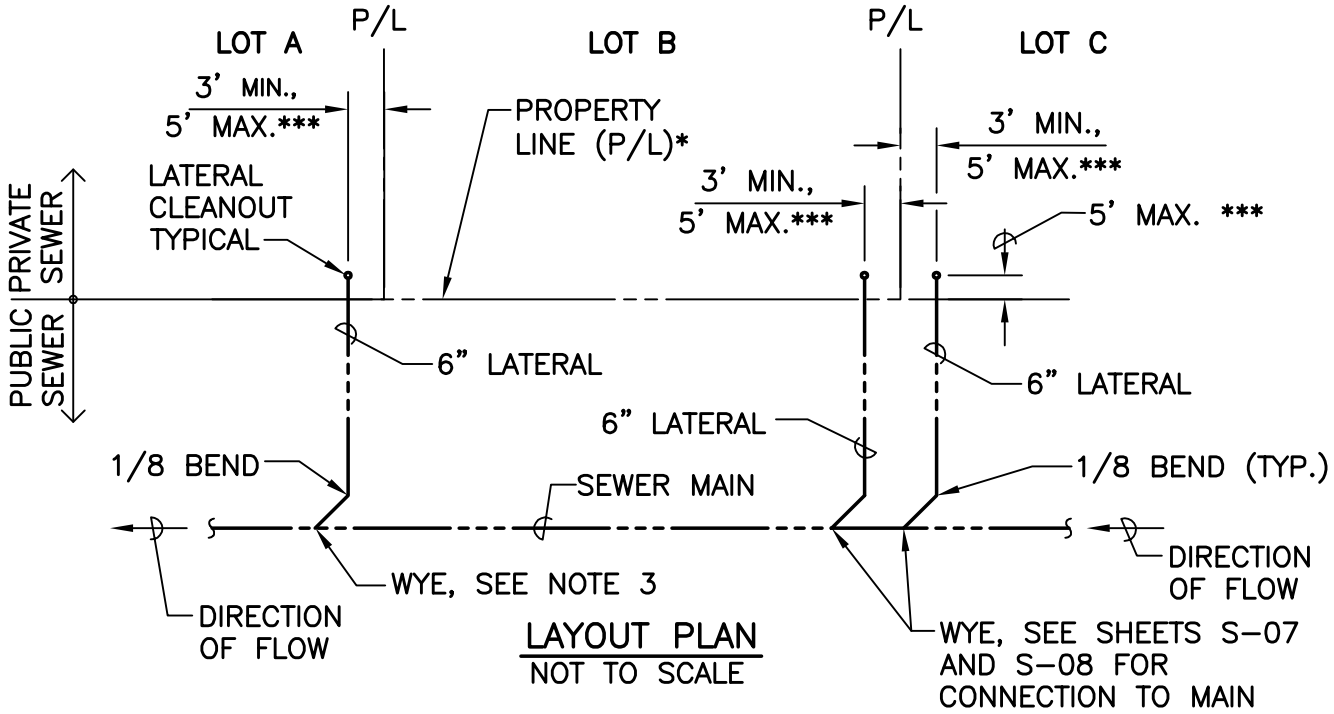

LAYOUT PLAN
NOT TO SCALE

* EASEMENT BOUNDARY WHERE APPLICABLE (TYP. FOR ALL DETAILS)

** FLUSH IN PAVED AREAS OR CONCRETE SLAB

*** APPLIES TO CLEANOUT LOCATION

NOTES:

1. PERMISSION IS TO BE SECURED FROM PROPERTY OWNER BEFORE CONSTRUCTION AT PROPERTY LINE IS STARTED.
2. EACH LATERAL SHALL SERVICE ONLY ONE LOT.
3. LATERALS REQUIRING PIPES 8" AND LARGER SHALL BE DESIGNED AS A BRANCH SEWER WITH A MANHOLE AT PROPERTY LINE.
4. TO THE EXTENT PRACTICAL, ALL LATERALS SHALL BE CONSTRUCTED PERPENDICULAR TO THE PROPERTY LINE.
5. PVC DWV (DRAIN WASTE VENT) FITTINGS SHALL BE SCHEDULE 80.

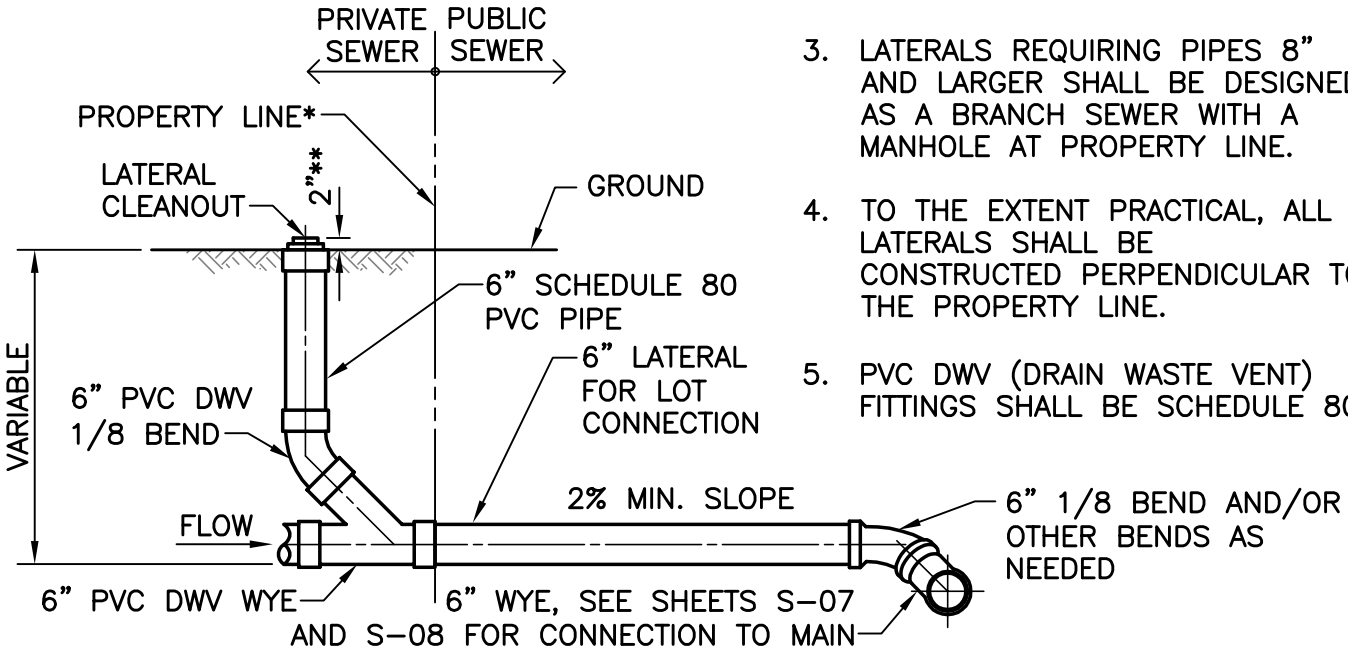

DETAIL AT PROPERTY LINE AND MAIN LINE
NOT TO SCALE

DATE: 7/2017

CITY AND COUNTY OF HONOLULU	STANDARD DETAILS	LATERALS	S-04

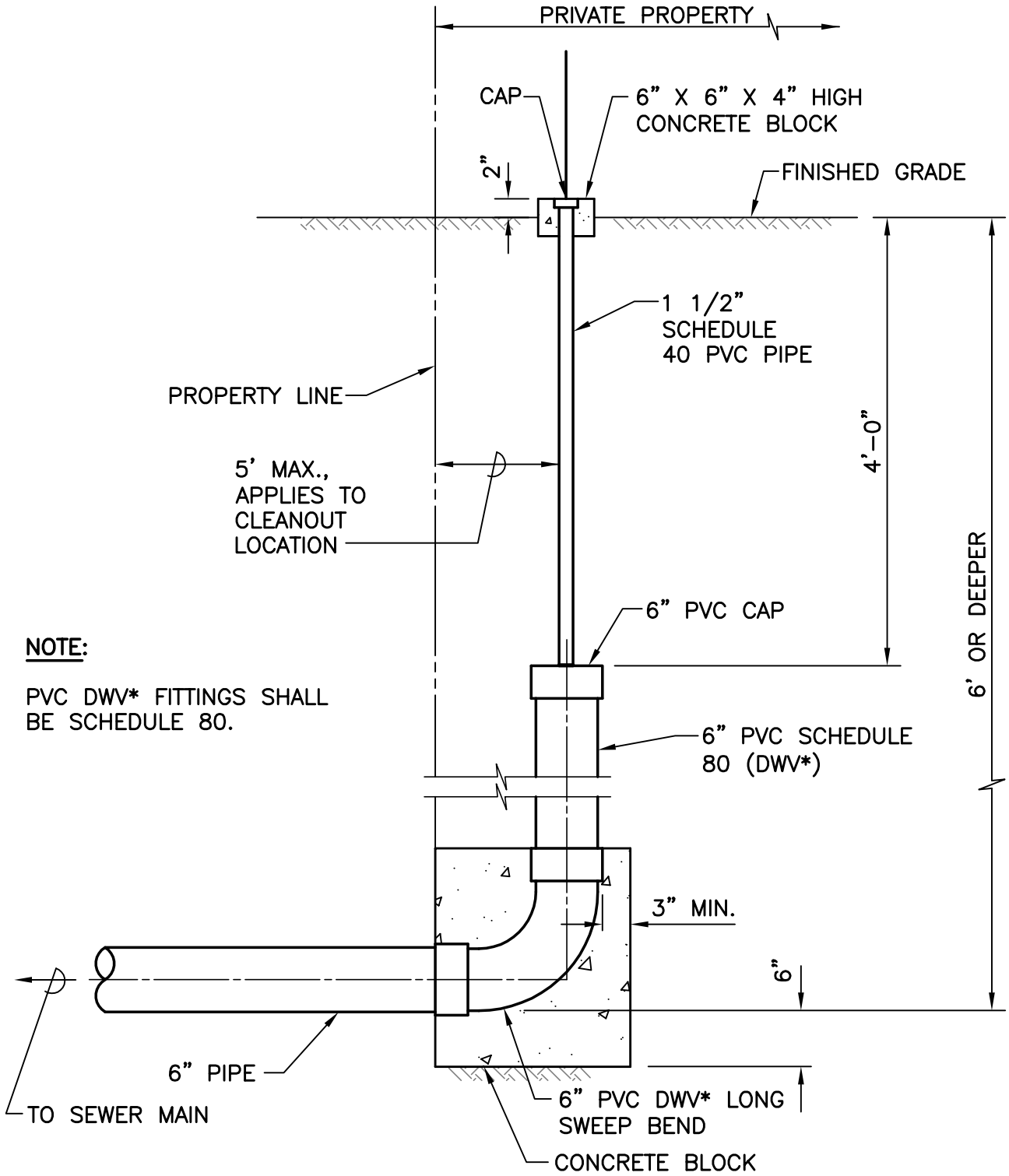

NOTE:

PVC DWV* FITTINGS SHALL BE SCHEDULE 80.

* DRAIN WASTE VENT

1' 0 1' 2' 3'

SCALE: 3/4" = 1'-0"

DATE: 7/2017

CITY AND COUNTY OF HONOLULU	STANDARD DETAILS	ADVANCE RISER CONNECTION – TYPE 1 (PRIOR TO DETERMINING LATERAL INVERT)	S-05

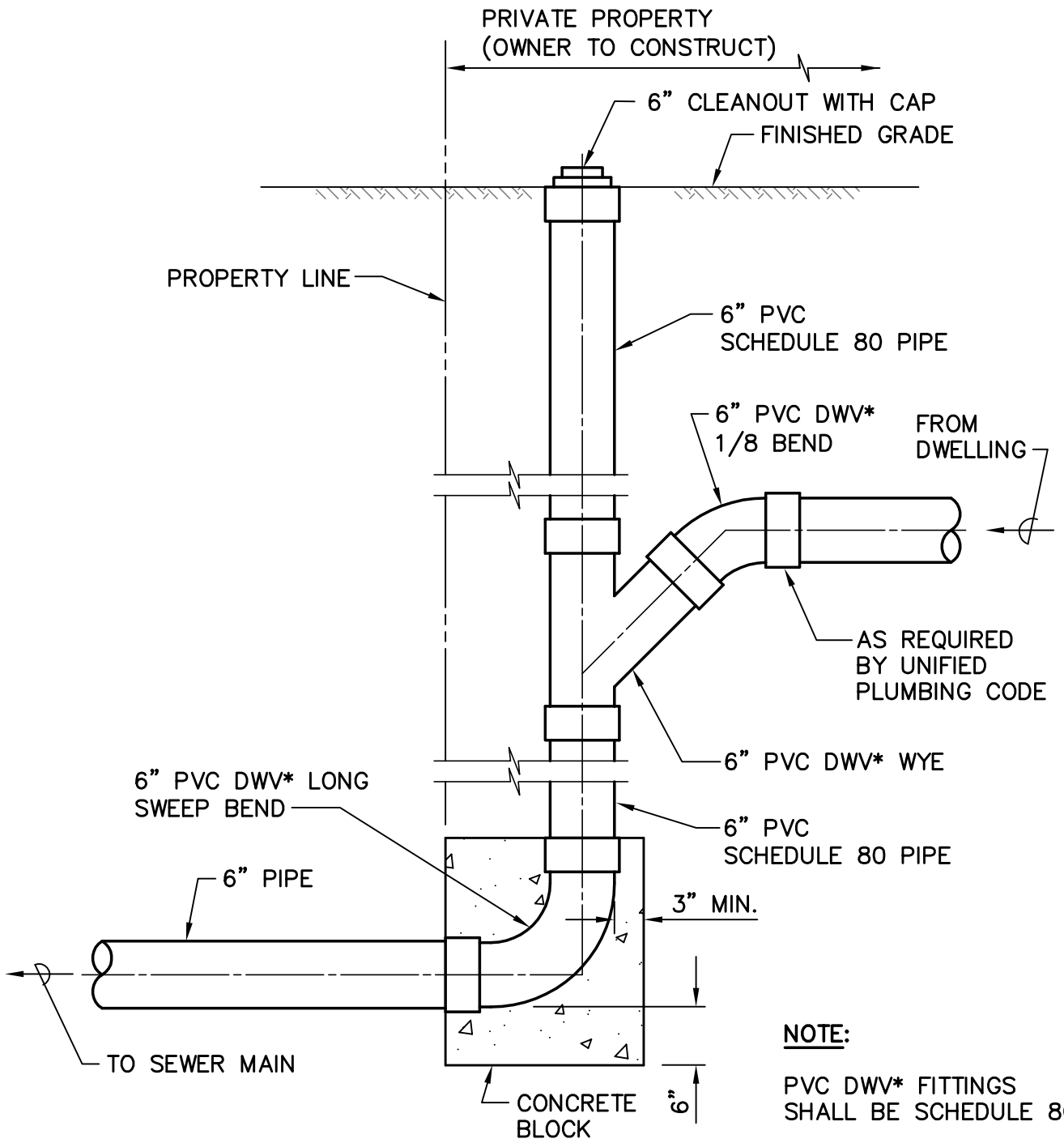

NOTE:

PVC DWV* FITTINGS SHALL BE SCHEDULE 80.

* DRAIN WASTE VENT

1' 0 1' 2' 3'

SCALE: 3/4" = 1'-0"

DATE: 7/2017

CITY AND COUNTY OF HONOLULU	STANDARD DETAILS	ADVANCE RISER CONNECTION – TYPE 2 (AFTER LATERAL INVERT IS DETERMINED)	S-06

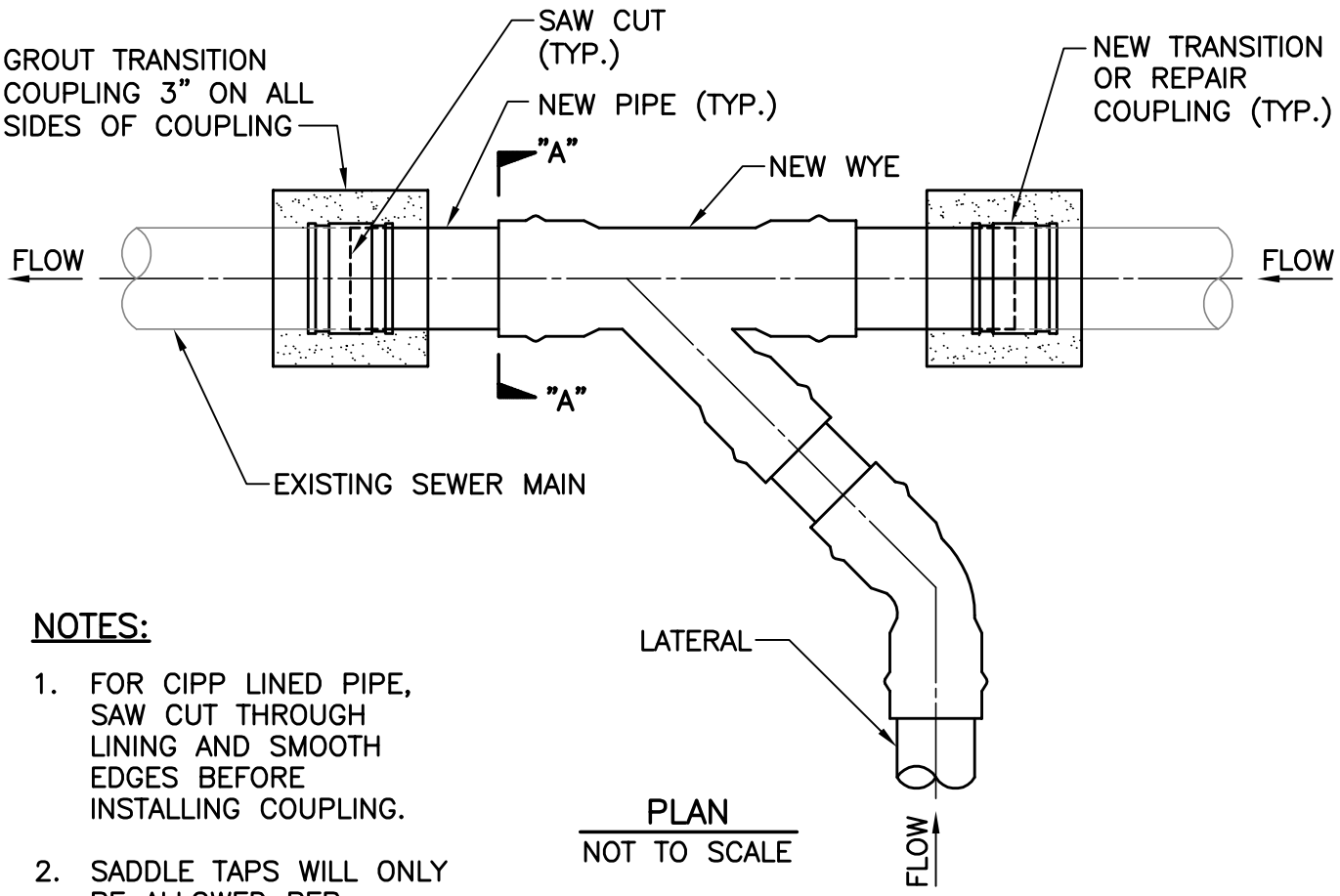

PLAN
NOT TO SCALE

NOTES:

1. FOR CIPP LINED PIPE, SAW CUT THROUGH LINING AND SMOOTH EDGES BEFORE INSTALLING COUPLING.
2. SADDLE TAPS WILL ONLY BE ALLOWED PER APPROVAL OF CITY INSPECTOR.

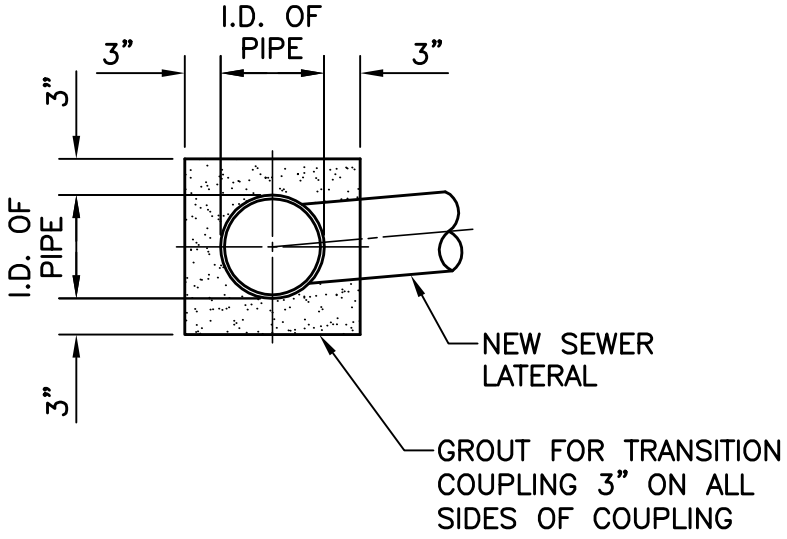

SECTION "A" – "A"
NOT TO SCALE

DATE: 7/2017

CITY AND COUNTY OF HONOLULU	STANDARD DETAILS	LATERAL CONNECTION TO EXISTING PIPE (SEWER MAINS 8–INCH TO 12–INCH)	S–07

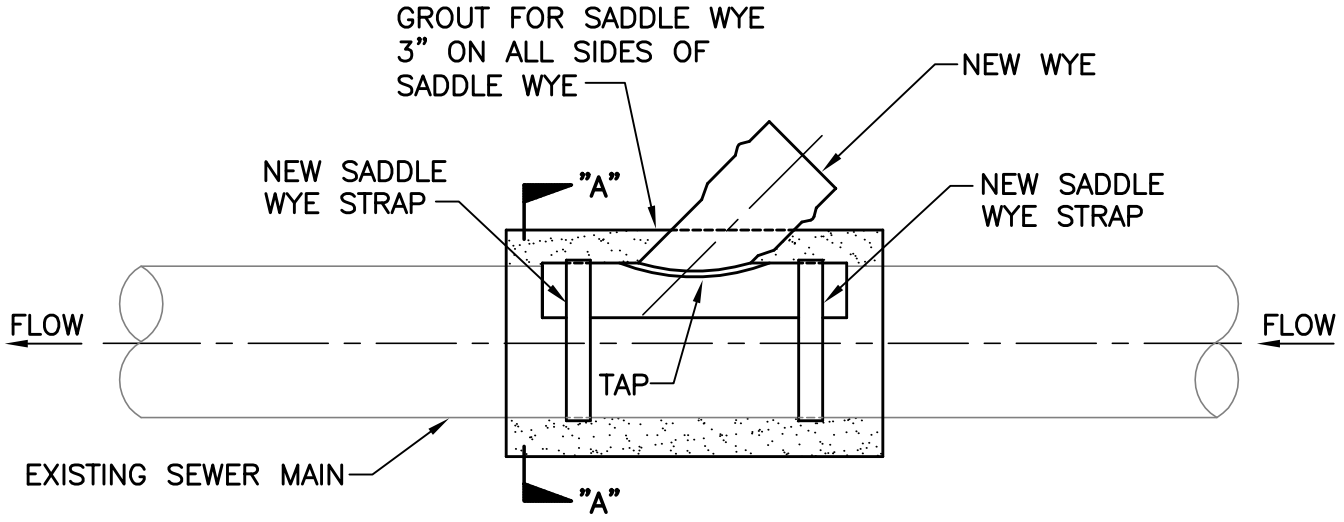

PLAN
NOT TO SCALE

NOTES:

1. FOR CIPP LINED PIPE, CAREFULLY REMOVE HOST PIPE FROM AREA TO ALLOW FOR SADDLE WYE DRILL HOLE IN CIPP AND BRUSH EDGES TO PROVIDE CLEAR HOLE FREE OF OBSTRUCTIONS.

2. SUBSTITUTIONS WILL BE ALLOWED PER APPROVAL OF CITY INSPECTOR.

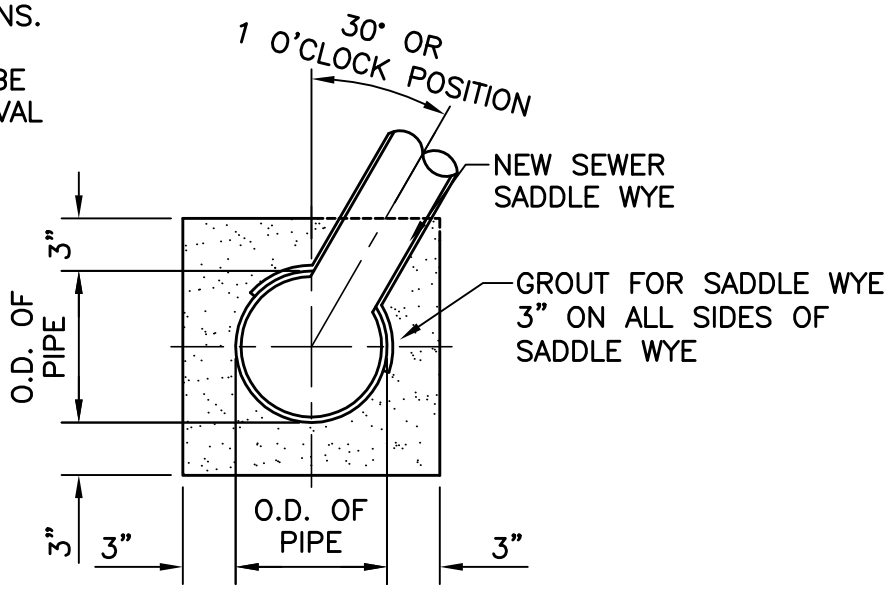

SECTION "A" – "A"
NOT TO SCALE

DATE: 7/2017

CITY AND COUNTY OF HONOLULU	STANDARD DETAILS	LATERAL CONNECTION TO EXISTING PIPE (SEWER MAINS 12–INCH TO 16–INCH)	S–08

MANHOLE NOTES:

BUOYANCY:

1. MANHOLES SHALL BE DESIGNED TO RESIST BUOYANCY WITH A MINIMUM SAFETY FACTOR OF 1.5.

BASES:

1. WHEN PRE-CAST CONCRETE BASE IS USED, A MINIMUM 6" THICKNESS OF CRUSHED ROCK BEDDING MATERIAL SHALL BE USED FOR LEVELING. THE CRUSHED ROCK LEVELING COURSE SHALL BE ENVELOPED IN FILTER FABRIC AND EXTEND A MINIMUM 6" BEYOND THE CONCRETE BASE OUTER EDGES. FILTER FABRIC JOINTS SHALL BE OVERLAPPED 12".

2. APPROVED PRE-CAST MONOLITHIC BASE WITH INTEGRAL RISER SECTION MAY BE USED IN LIEU OF SEPARATE PRE-CAST OR CAST-IN-PLACE BASE SLABS.

WALLS:

1. THE PRE-CAST MANHOLE RISER SECTION SHALL BE CAST WITH OPENINGS WHENEVER SEWER PIPES MUST PASS THROUGH THE WALL.

2. ANNULAR SPACE AT WALL PIPE PENETRATIONS SHALL BE FILLED WITH NON-SHRINK GROUT, EXCEPT WHERE APPROVED RESILIENT CONNECTORS ARE USED.

3. PREFORMED FLEXIBLE SEALING GASKETS SHALL BE PLACED BETWEEN ALL PRE-CAST SECTIONS.

FRAMES AND COVERS:

1. TYPE "SA" SHALL BE USED FOR MANHOLES WITH PIPES DIAMETERS 12" OR LESS.

2. TYPE "SB" SHALL BE USED FOR MANHOLES WITH PIPE DIAMETERS GREATER THAN 12".

3. INSTALL WRAP SEAL AROUND MANHOLE COVER, FRAME, AND BRICKS/GRADE ADJUSTMENT RINGS TO REDUCE INFILTRATION.

4. PROVIDE 1/2" NON-SHRINK GROUT ABOVE AND BELOW BRICKS/GRADE RINGS.

5. PROVIDE MANHOLE INSERTS, RAIN CATCHER OR EQUIVALENT.

RUNGS:

1. RUNGS SHALL NOT BE INSTALLED IN MANHOLES.

DATE: 7/2017

MANHOLE NOTES (CONTINUED):

PIPE CONNECTION:

1. ALL PIPES ENTERING OR LEAVING A MANHOLE SHALL HAVE A DEFLECTION COUPLING AND FLEXIBLE JOINT AS SHOWN ON SHEETS S-23 AND S-24.

2. ALL PIPE CONNECTIONS TO THE MANHOLE SHALL BE WATERTIGHT PER STANDARD SPECIFICATIONS.

REINFORCING STEEL:

1. ALL REINFORCING BARS INTERFERING WITH PIPE SHALL BE BENT TO PROVIDE A MINIMUM 1.5" CLEAR DISTANCE FROM THE SEWER PIPE.

DATE: 7/2017

NOTES:

1. SEE SHEETS S-23 AND S-24 FOR PIPE CONNECTION.
2. SEE SHEET S-26 FOR PRE-CAST SECTIONS.
3. REINFORCING NOT SHOWN FOR CLARITY.

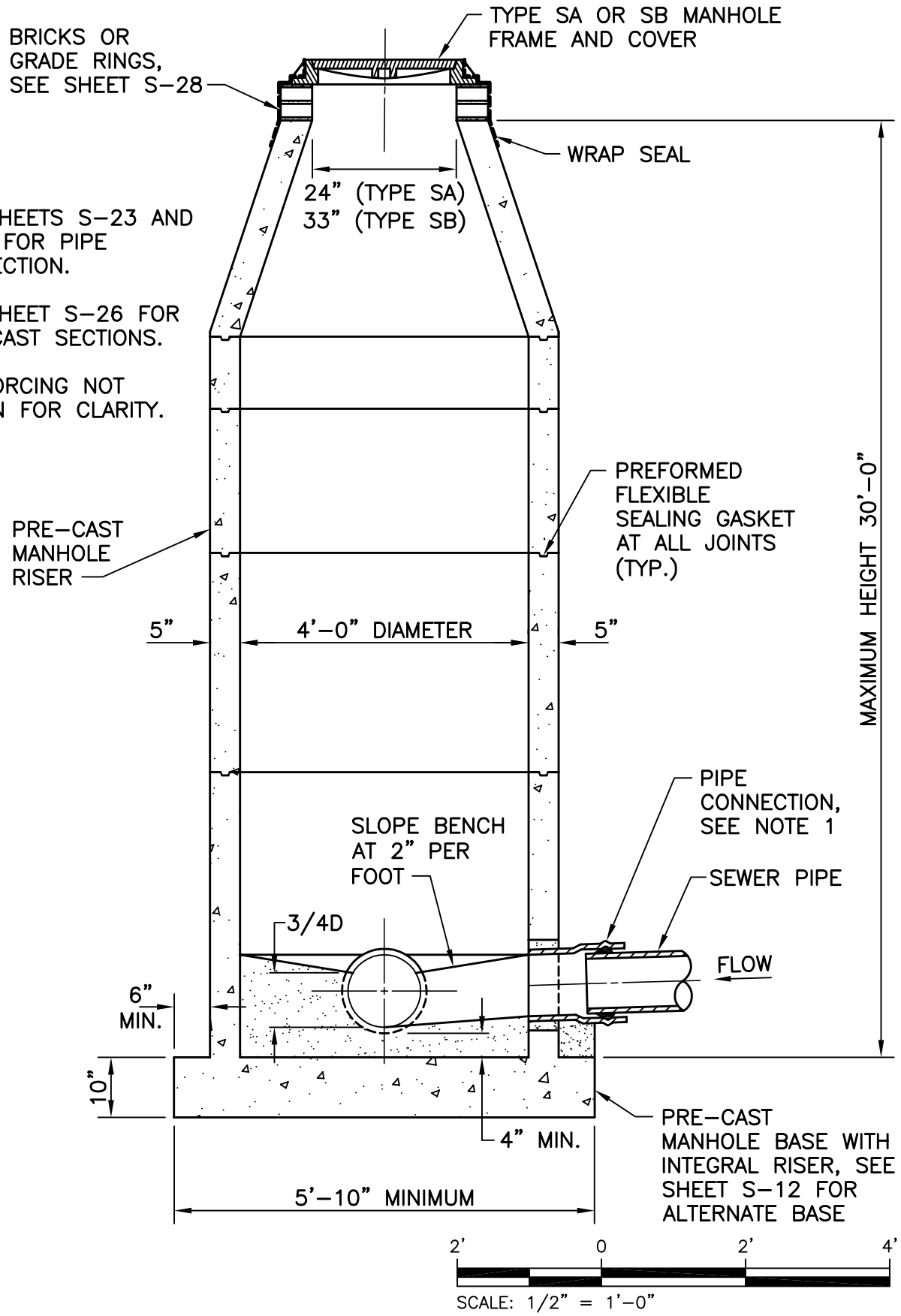

DATE: 7/2017

SCALE: 1/2" = 1'-0"

CITY AND COUNTY OF HONOLULU	STANDARD DETAILS	4-FOOT DIAMETER PRE-CAST CONCRETE MANHOLE	S-11

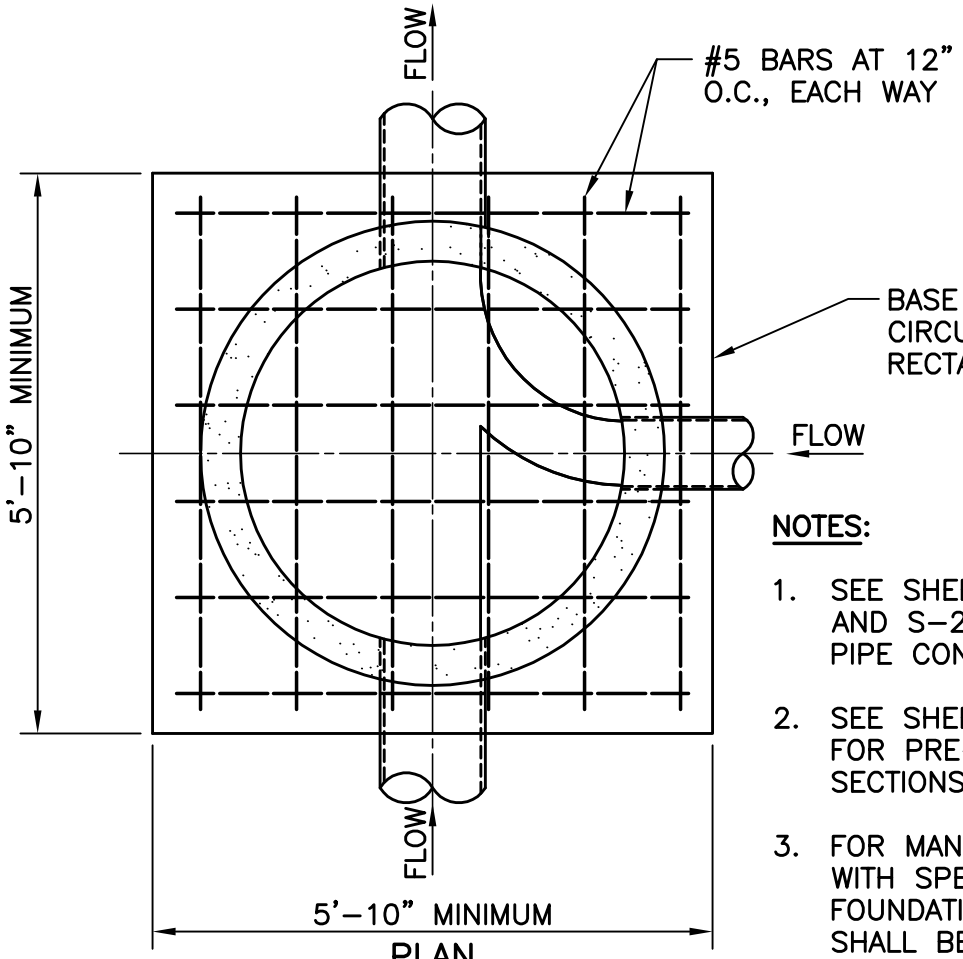

PLAN

NOTES:

1. SEE SHEETS S-23 AND S-24 FOR PIPE CONNECTION.
2. SEE SHEET S-26 FOR PRE-CAST SECTIONS.
3. FOR MANHOLES WITH SPECIAL FOUNDATIONS, BASE SHALL BE DESIGNED BY LICENSED STRUCTURAL ENGINEER.

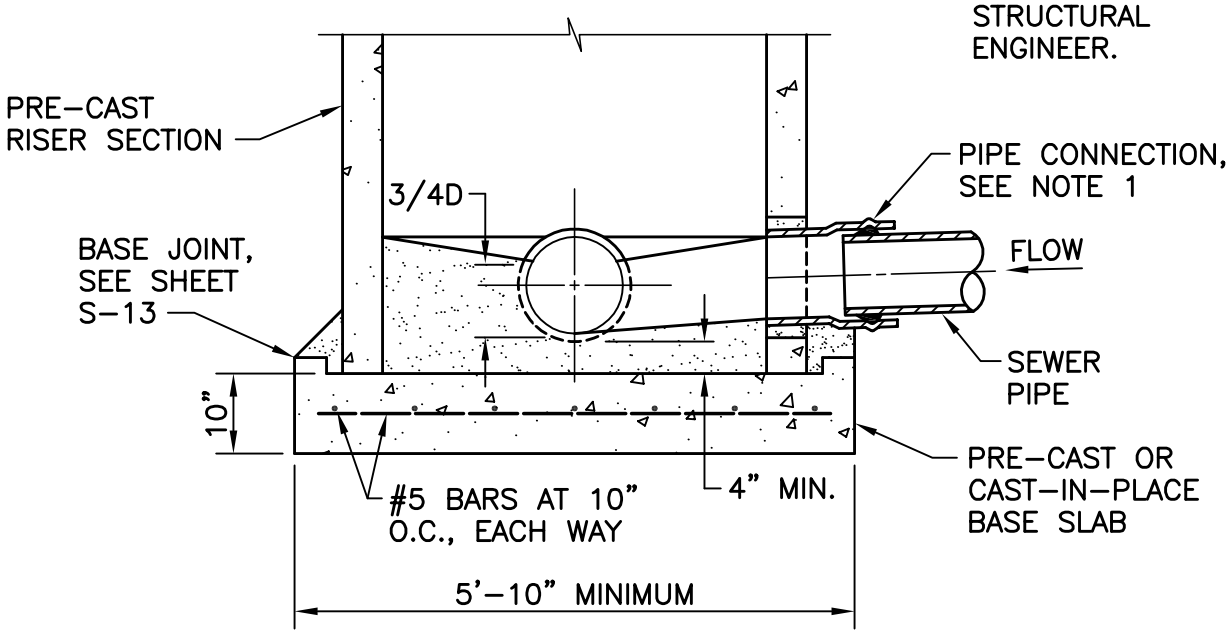

SECTION

SCALE: 1/2" = 1'-0"

DATE: 7/2017

CITY AND COUNTY OF HONOLULU	STANDARD DETAILS	PRE-CAST CONCRETE MANHOLE – ALTERNATE BASE AND SECTION	S-12

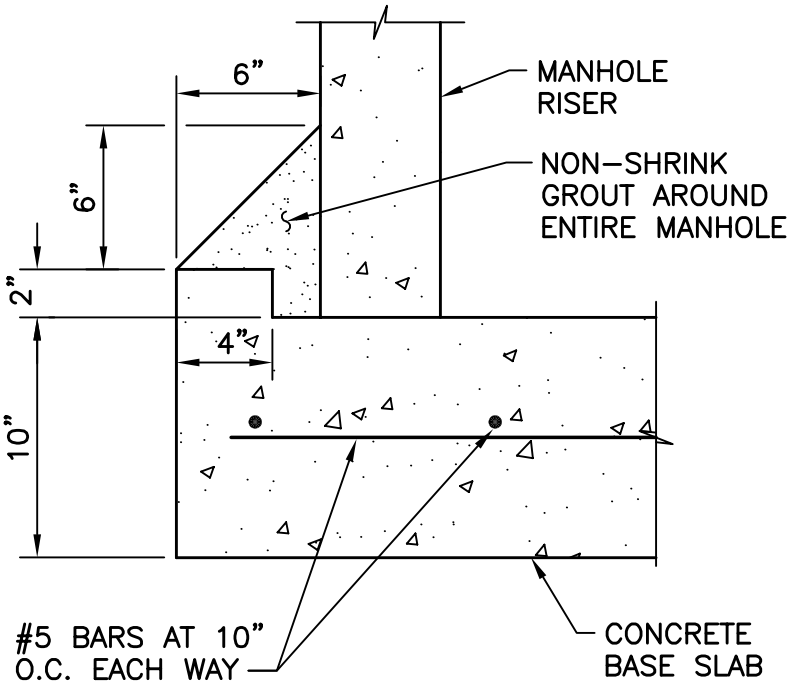

SCALE: 1 1/2" = 1'-0"

DATE: 7/2017

CITY AND COUNTY OF HONOLULU	STANDARD DETAILS	CAST-IN-PLACE MANHOLE BASE JOINT	S-13

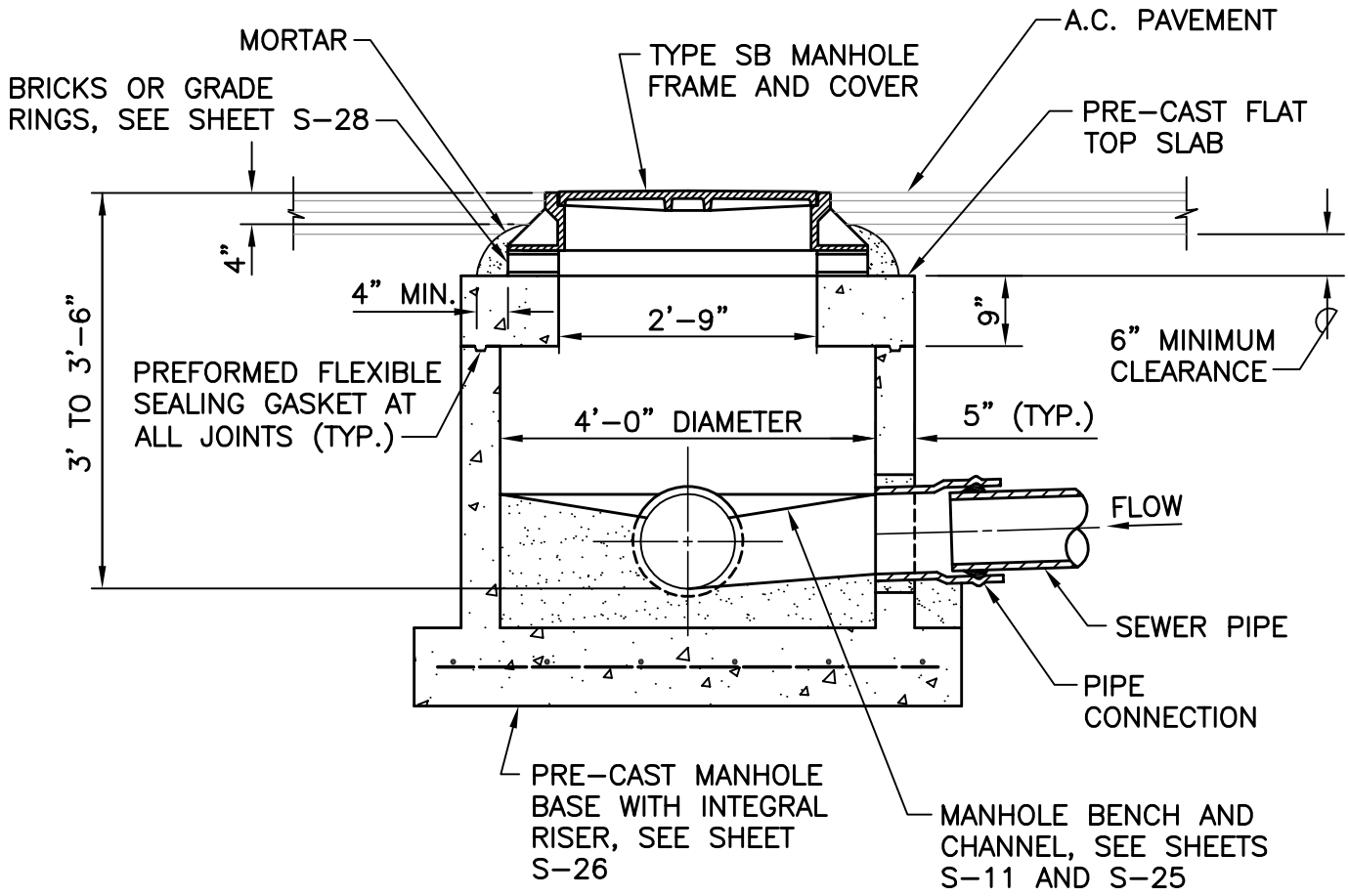

NOTES:

1. USE OF SHALLOW MANHOLE SHALL REQUIRE APPROVAL BY THE CITY.
2. SHALLOW MANHOLES SHALL BE USED ONLY FOR 10" DIAMETER PIPES OR SMALLER.
3. SEE SHEET S-12 FOR ALTERNATE BASE. ONLY ONE RISER SECTION SHALL BE USED.
4. SEE SHEETS S-23 AND S-24 FOR PIPE CONNECTION.
5. SEE SHEET S-26 FOR PRE-CAST SECTIONS.

SCALE: 1/2" = 1'-0"

DATE: 7/2017

CITY AND COUNTY OF HONOLULU	STANDARD DETAILS	4-FOOT DIAMETER PRE-CAST CONCRETE SHALLOW MANHOLE	S-14

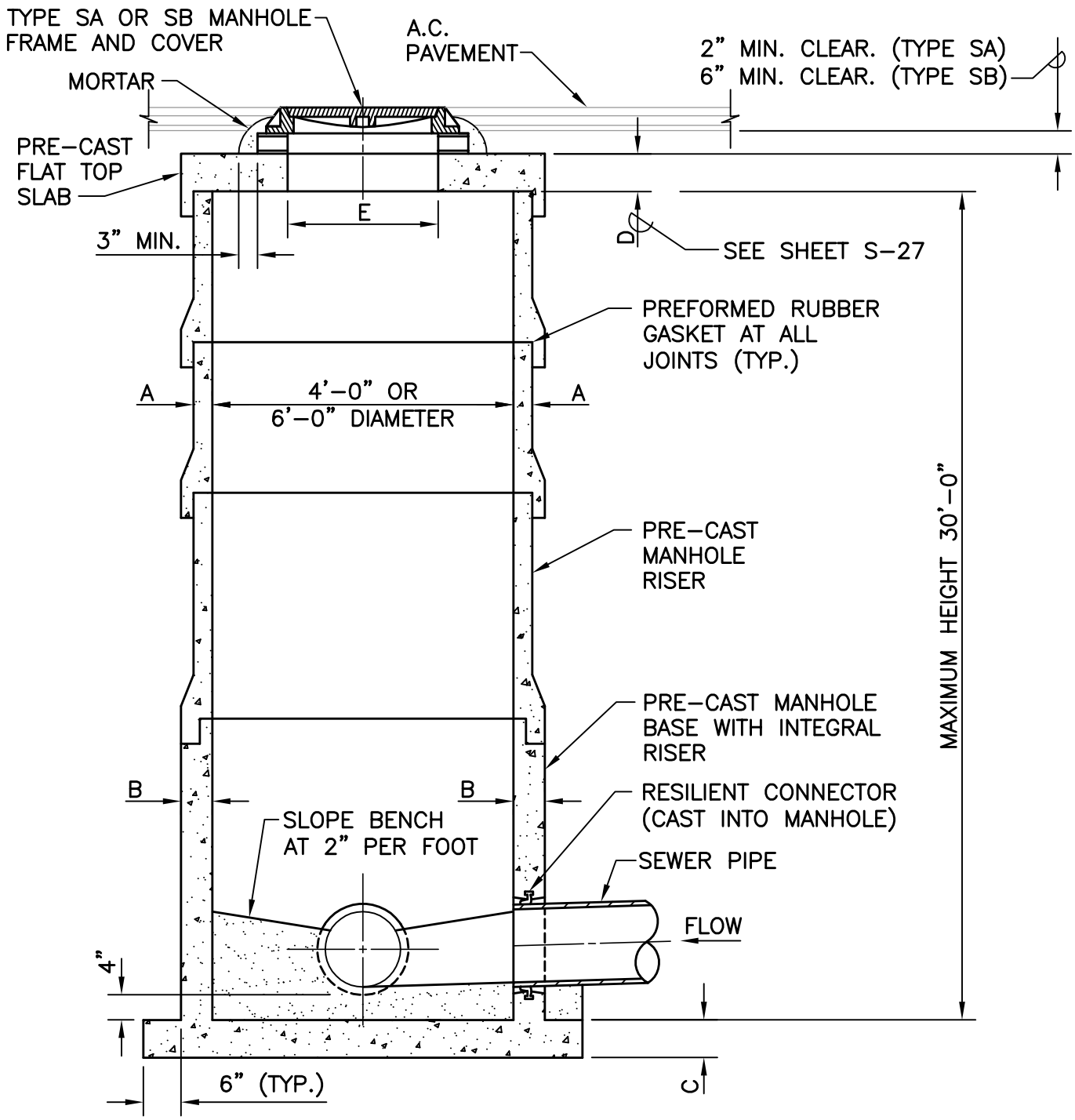

	4'-0" DIA. MANHOLE	6'-0" DIA. MANHOLE
A	3"	4"
B	5"	7"
C	6"	8"
D	6"	8"
E	24", 34"	34"

2' 0 2' 4'

SCALE: 1/2" = 1'-0"

DATE: 7/2017

CITY AND COUNTY OF HONOLULU	STANDARD DETAILS	STEEL REINFORCED POLYMER CONCRETE MANHOLE	S-15

NOTES:

1. SEE SHEETS S–23 AND S–24 FOR PIPE CONNECTION.
2. SEE SHEET S–27 FOR PRE–CAST SECTIONS.

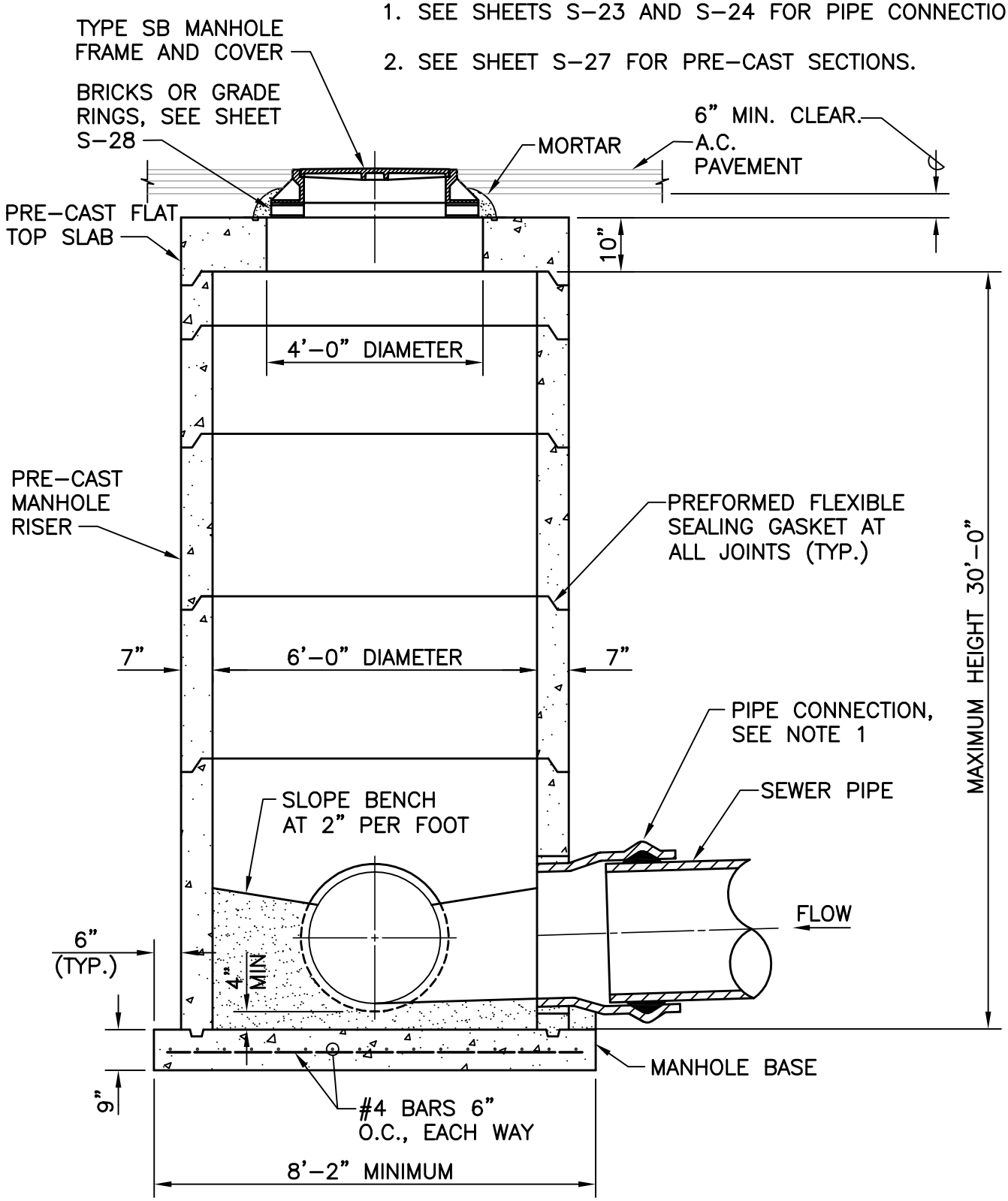

2' 0 2' 4' 6'

SCALE: 3/8" = 1'–0"

DATE: 7/2017

CITY AND COUNTY OF HONOLULU	STANDARD DETAILS	6–FOOT DIAMETER PRE–CAST CONCRETE MANHOLE	S–16

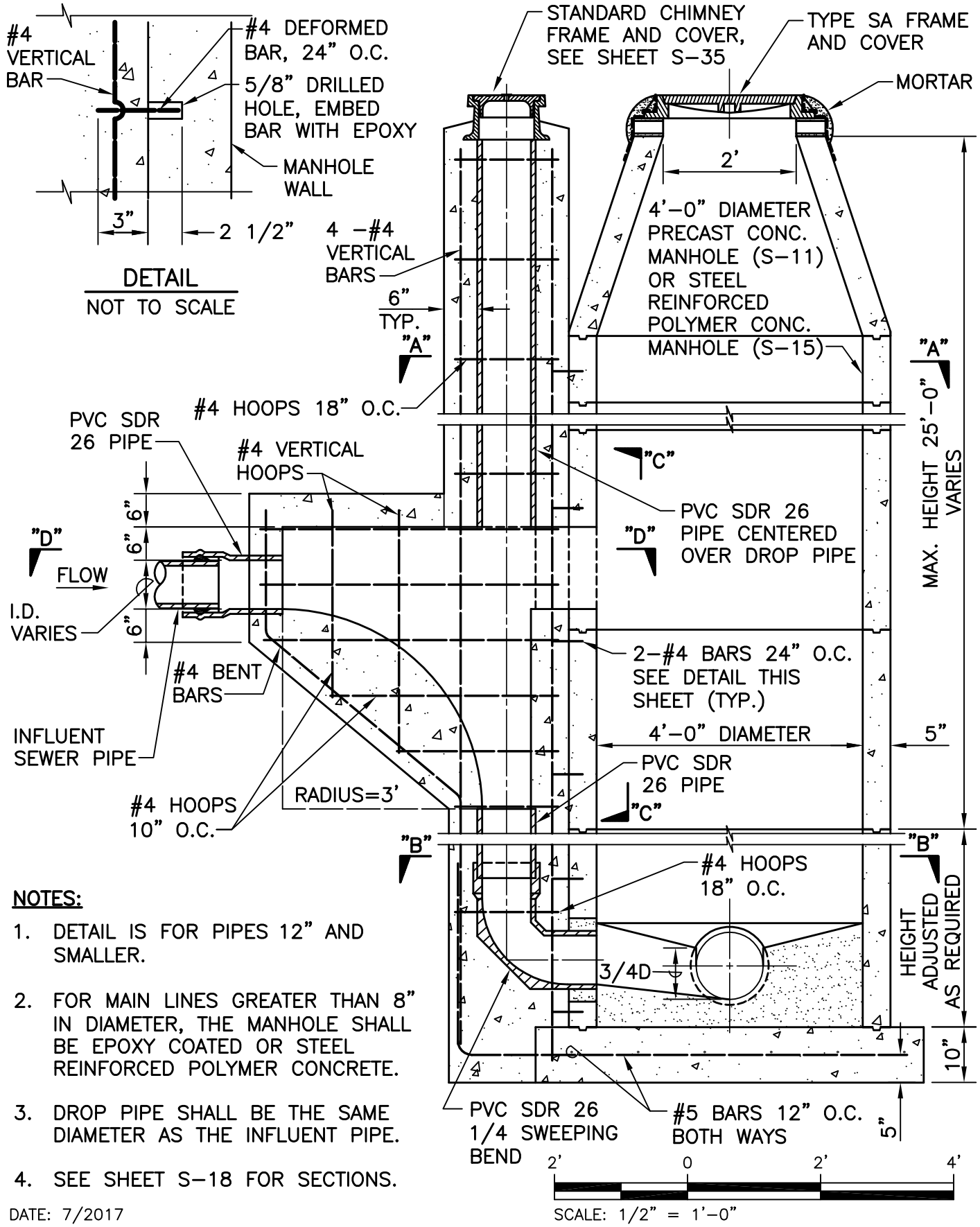

NOTES:

1. DETAIL IS FOR PIPES 12" AND SMALLER.
2. FOR MAIN LINES GREATER THAN 8" IN DIAMETER, THE MANHOLE SHALL BE EPOXY COATED OR STEEL REINFORCED POLYMER CONCRETE.
3. DROP PIPE SHALL BE THE SAME DIAMETER AS THE INFLUENT PIPE.
4. SEE SHEET S-18 FOR SECTIONS.

DATE: 7/2017

CITY AND COUNTY OF HONOLULU	STANDARD DETAILS	DROP MANHOLE FOR DROPS OVER 5 FEET (INVERT TO INVERT)	S-17

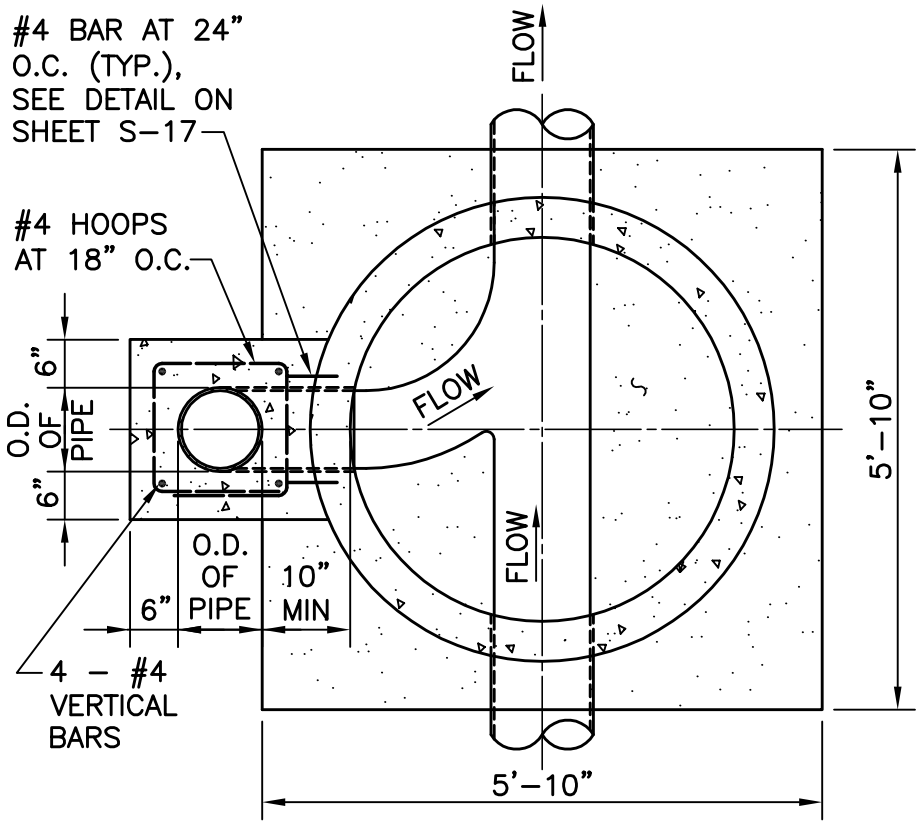

SECTION A-A
SCALE: 1/2" = 1'-0"

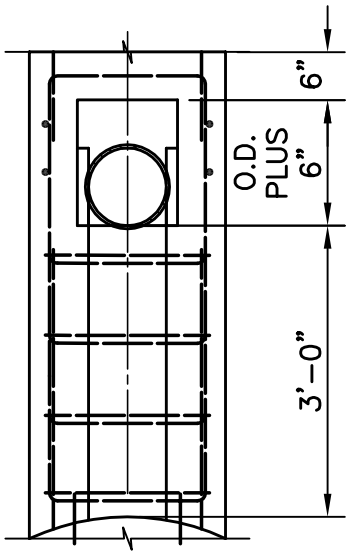

SECTION C-C
SCALE: 1/2" = 1'-0"

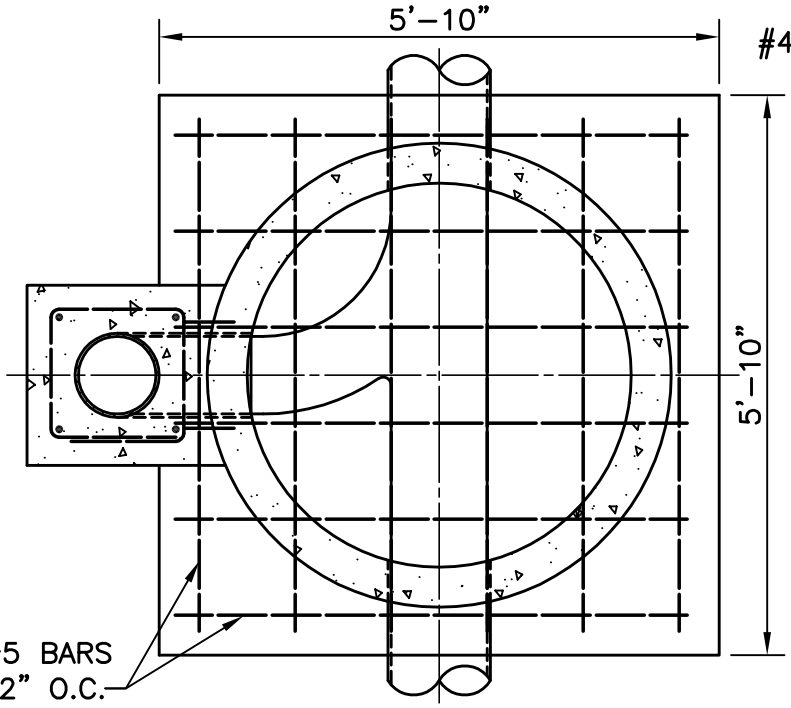

SECTION B-B
SCALE: 1/2" = 1'-0"

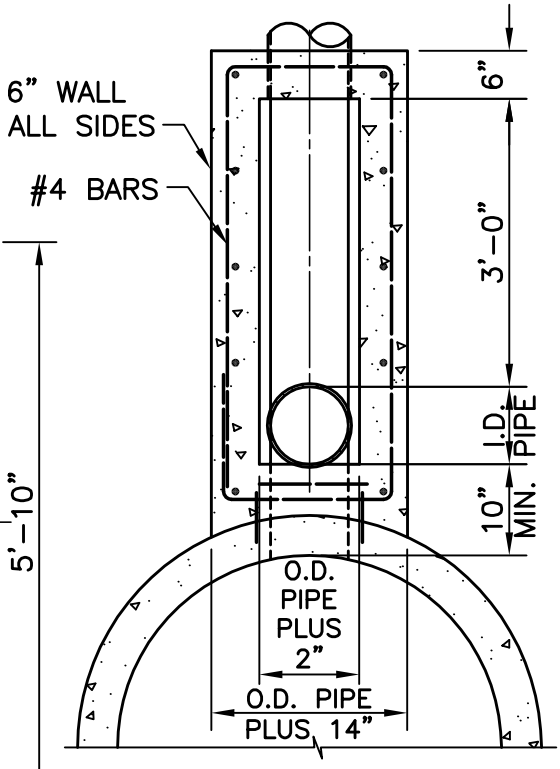

SECTION D-D
SCALE: 1/2" = 1'-0"

SCALE: 1/2" = 1'-0"

DATE: 7/2017

CITY AND COUNTY OF HONOLULU	STANDARD DETAILS	DROP MANHOLE SECTIONS	S-18

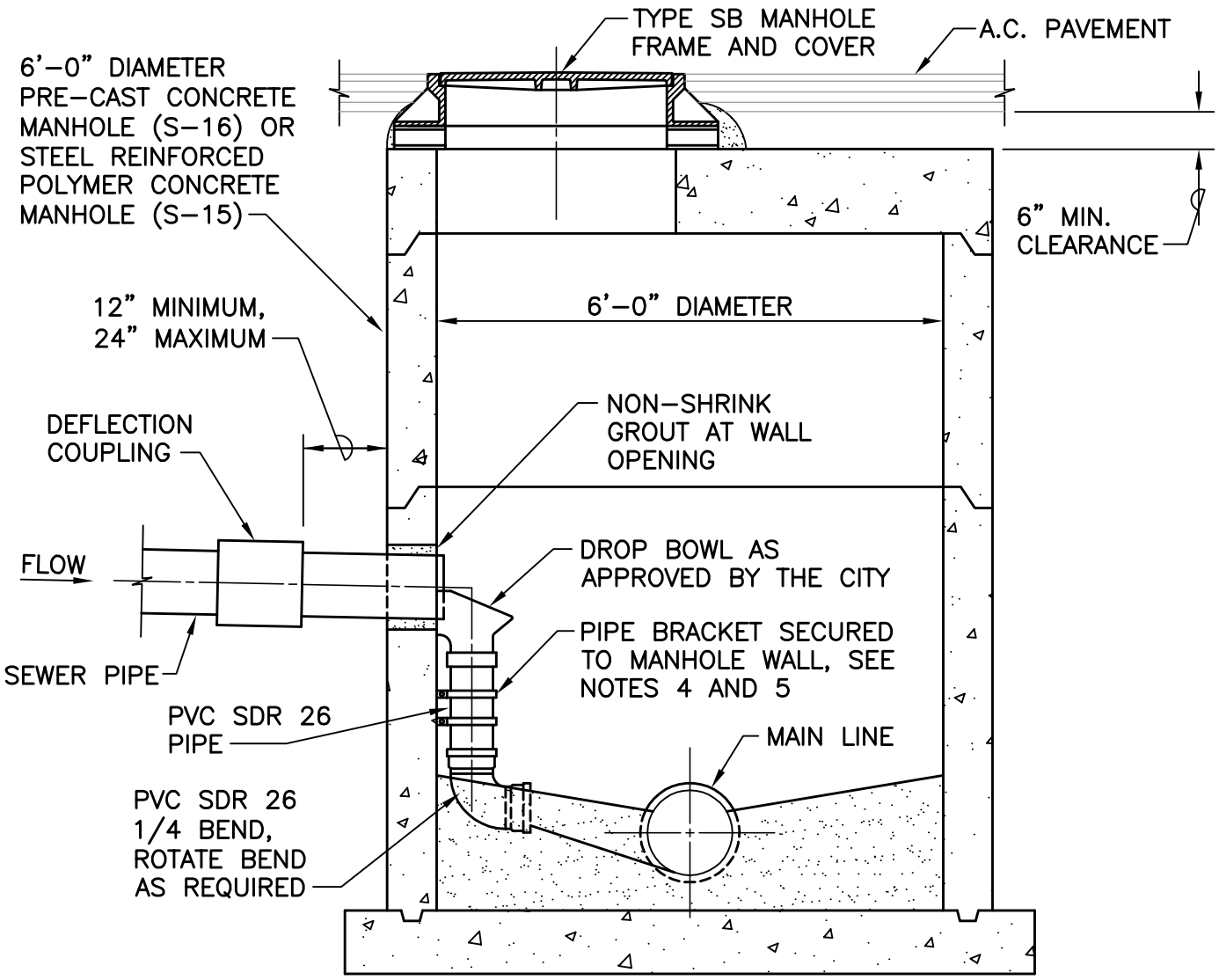

NOTES:

1. DETAIL IS FOR DROPS 1.5' TO 5' (INVERT TO INVERT) AND PIPES 12" AND SMALLER.
2. FOR MAIN LINES GREATER THAN 8" IN DIAMETER, THE MANHOLE SHALL BE EPOXY COATED OR STEEL REINFORCED POLYMER CONCRETE.
3. INSTALL AND SIZE DROP BOWL PER MANUFACTURER'S RECOMMENDATIONS.
4. PIPE BRACKETS, NUTS AND BOLTS SHALL BE 316 STAINLESS STEEL. EMBED BOLTS IN MANHOLE WALL WITH EPOXY.
5. PIPE BRACKETS SHALL BE EVENLY SPACED BETWEEN FITTINGS. THE MAXIMUM DISTANCE BETWEEN PIPE BRACKETS SHALL BE 3'.
6. MATCH CROWN OF 1/4 BEND WITH CROWN OF OUTLET PIPE UNLESS OTHERWISE APPROVED BY THE CITY.
7. NO MORE THAN ONE DROP BOWL PER MANHOLE UNLESS OTHERWISE APPROVED BY THE CITY.

2' 0 2' 4'

SCALE: 1/2" = 1'–0"

DATE: 7/2017

CITY AND COUNTY OF HONOLULU	STANDARD DETAILS	SHALLOW INSIDE DROP MANHOLE (SEWER MAINS 12–INCH AND SMALLER)	S–19

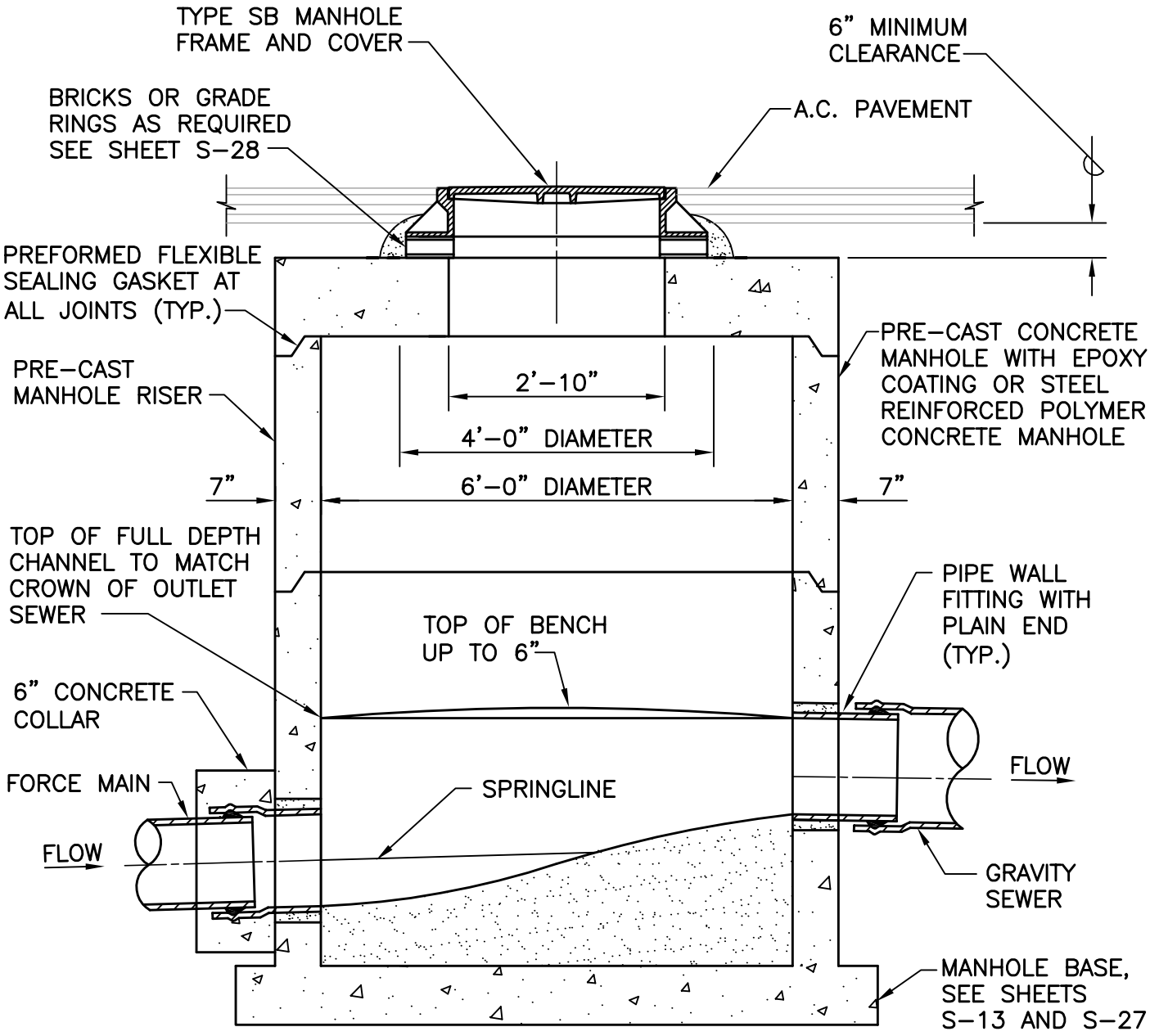

NOTES:

1. CONFIGURATION AND DIMENSIONS SHOWN ARE FOR PRE-CAST CONCRETE MANHOLE. SEE SHEET S-15 FOR DIMENSIONS FOR STEEL REINFORCED POLYMER CONCRETE MANHOLE.
2. INVERT OF OUTGOING GRAVITY SEWER PIPE SHALL BE AT THE SAME ELEVATION AS THE CROWN OF THE FORCE MAIN.
3. SEE SHEET S-21 FOR MANHOLE CHANNELIZATION.
4. SEE SHEET S-27 FOR PRE-CAST SECTIONS.

2' 0 2' 4'

SCALE: 1/2" = 1'-0"

DATE: 7/2017

CITY AND COUNTY OF HONOLULU	STANDARD DETAILS	FORCE MAIN TRANSITION MANHOLE	S-20

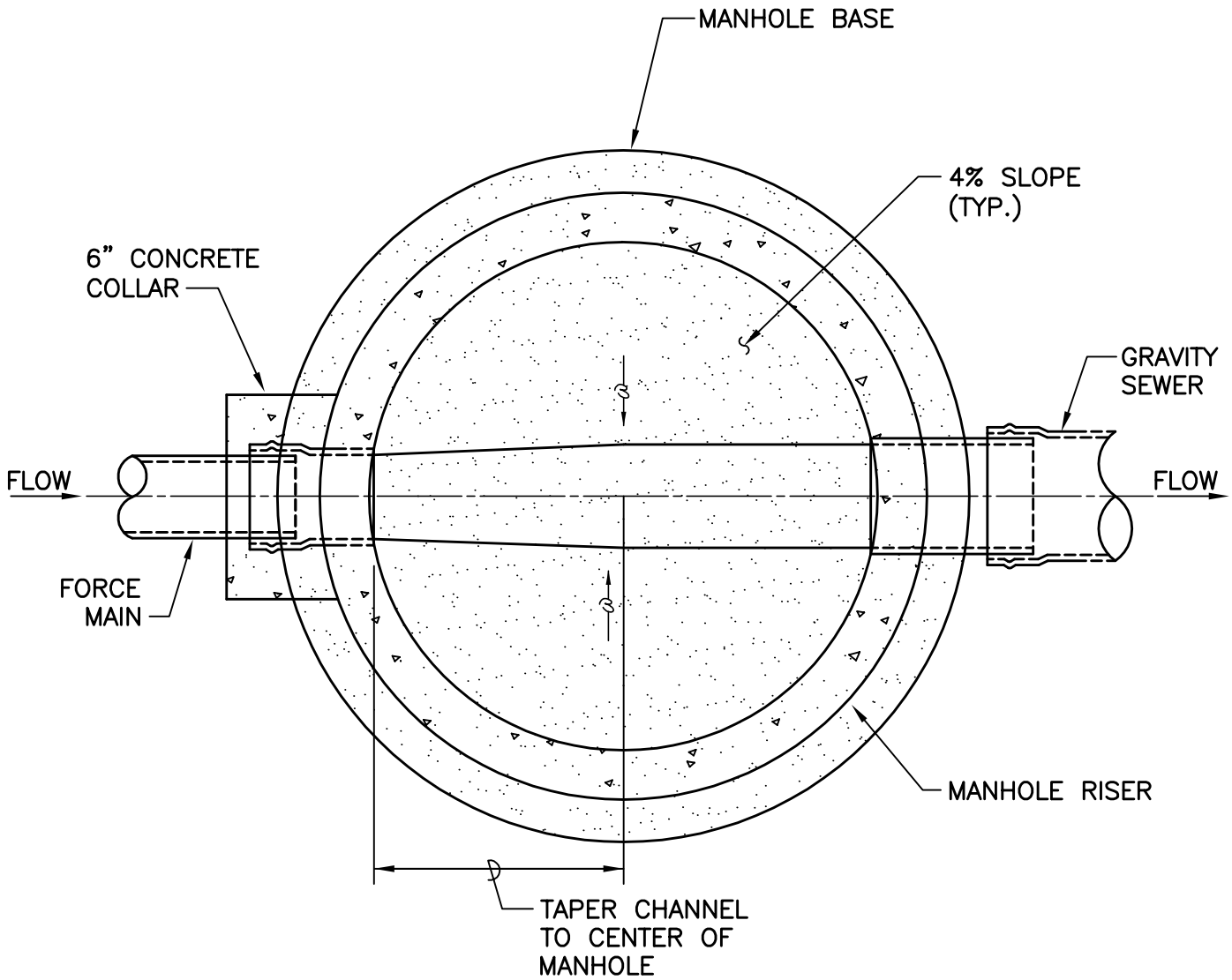

NOTES:

1. GRAVITY BRANCH SEWERS ARE NOT PERMITTED IN THE DISCHARGE MANHOLE.

2. ANGULAR CHANGE IN THE FLOW DIRECTION SHALL NOT BE MORE THAN 10 DEGREES.

2' 0 2' 4'

SCALE: 1/2" = 1'-0"

DATE: 7/2017

CITY AND COUNTY OF HONOLULU	STANDARD DETAILS	PLAN – FORCE MAIN DISCHARGE MANHOLE FLOW CHANNELIZATION	S-21

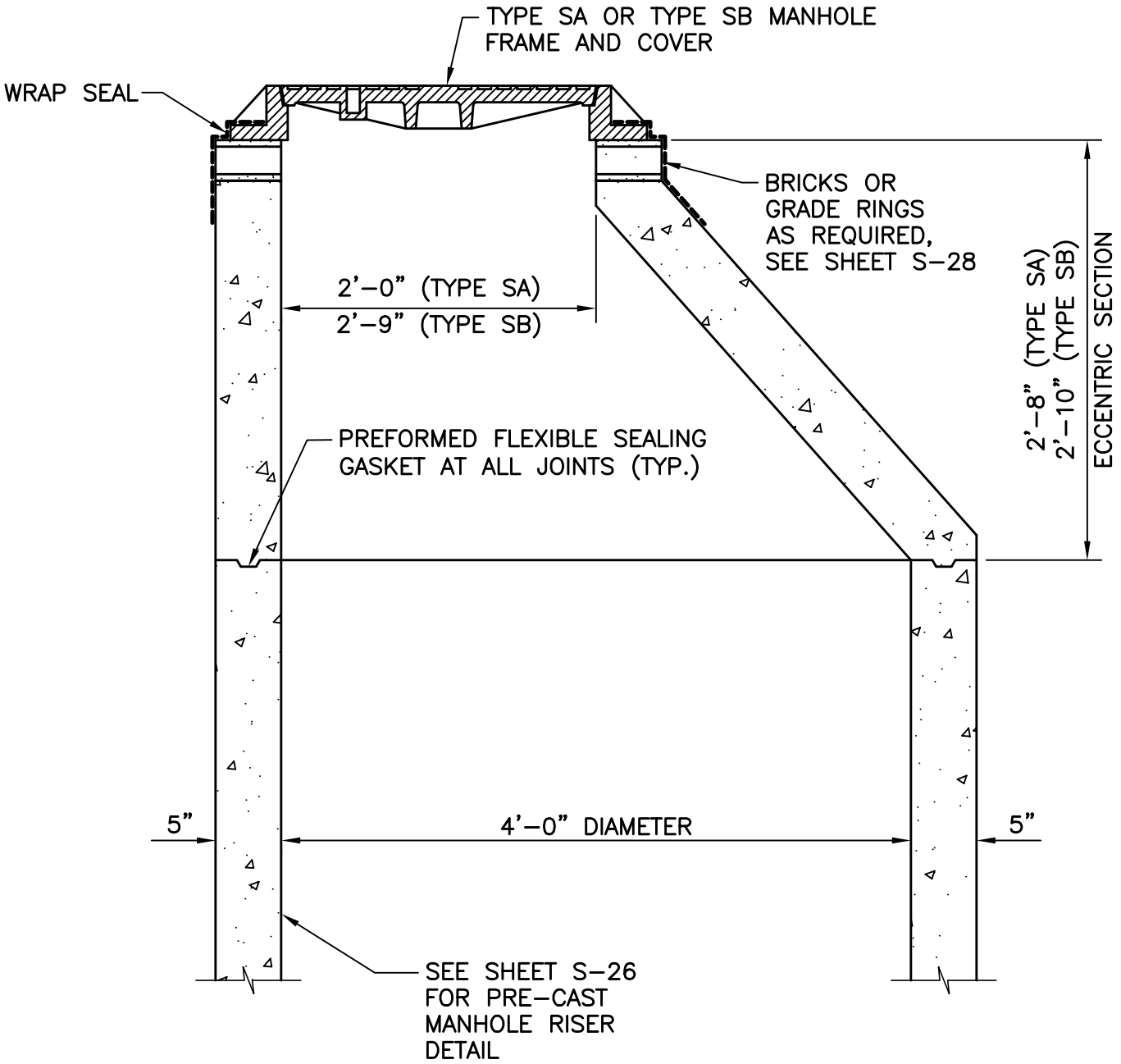

NOTE:

USE OF ECCENTRIC CONE SHALL BE USED ONLY AS APPROVED BY THE CITY.

1' 0 1' 2'

SCALE: 1" = 1'-0"

DATE: 7/2017

CITY AND COUNTY OF HONOLULU	STANDARD DETAILS	PRE-CAST CONCRETE ECCENTRIC MANHOLE CONE	S-22

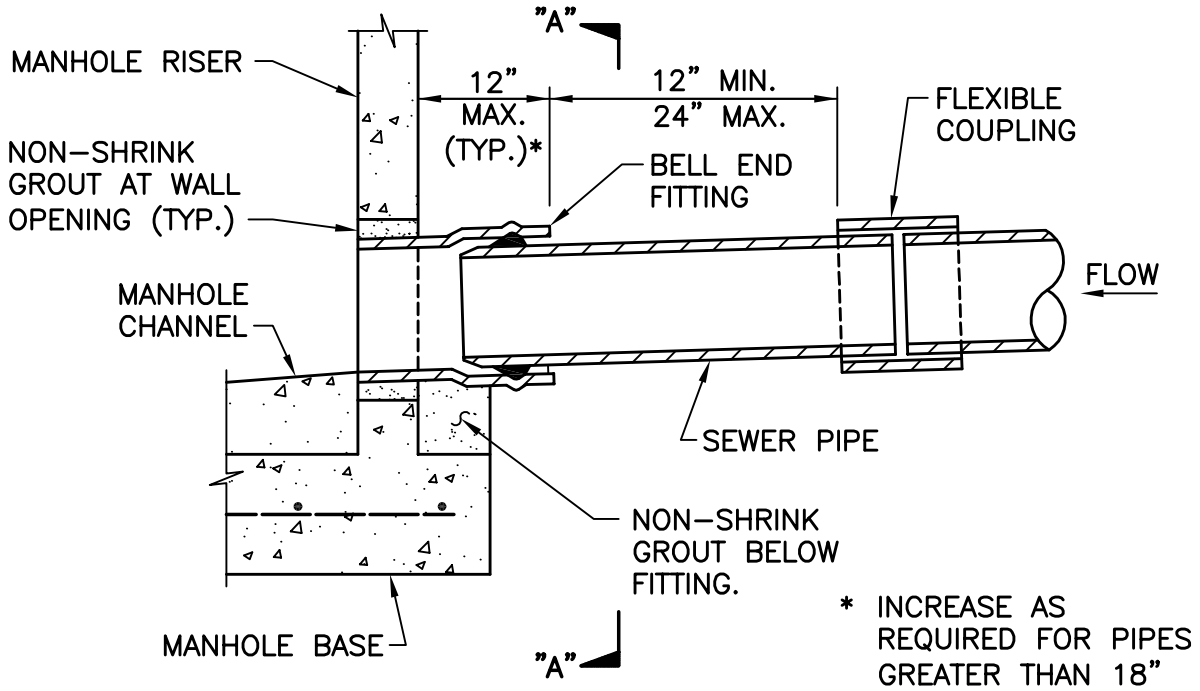

ELEVATION

NOTES:

1. FOR PVC PIPE, PROVIDE PRE-MANUFACTURED, APPROVED PVC SANDED MANHOLE ADAPTER WITH GASKETED BELL END. FOR VCP, PROVIDE GASKETED BELL END.

2. A GASKETED FLEXIBLE BELL END MAY BE USED IN LIEU OF A FLEXIBLE COUPLING.

3. BELL END FITTING USED ON INFLUENT SEWER PIPE. PLAIN END USED ON EFFLUENT PIPE

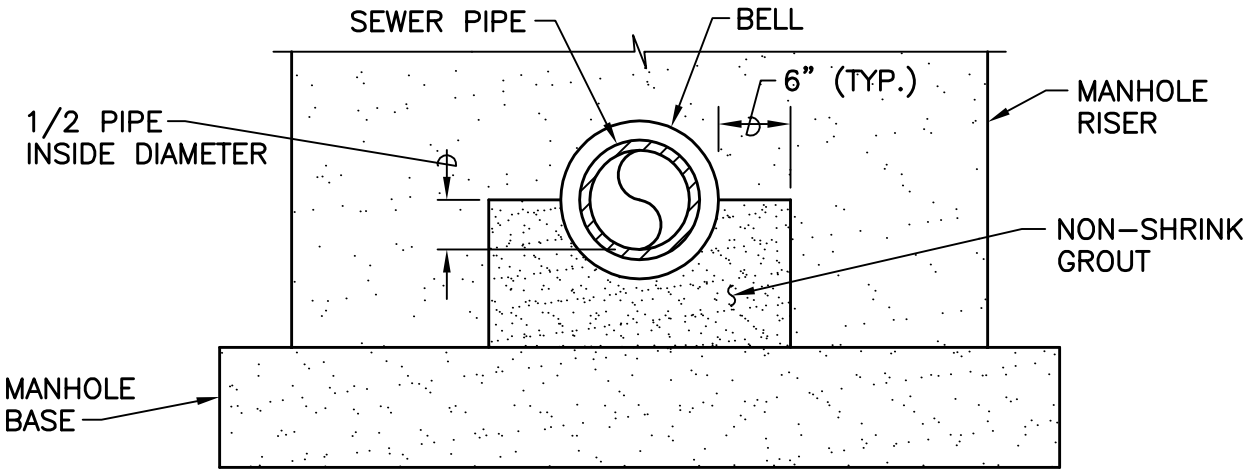

SECTION A-A

DATE: 7/2017

SCALE: 3/4" = 1'-0"

CITY AND COUNTY OF HONOLULU	STANDARD DETAILS	MANHOLE PIPE CONNECTION - WALL PIPE FITTING	S-23

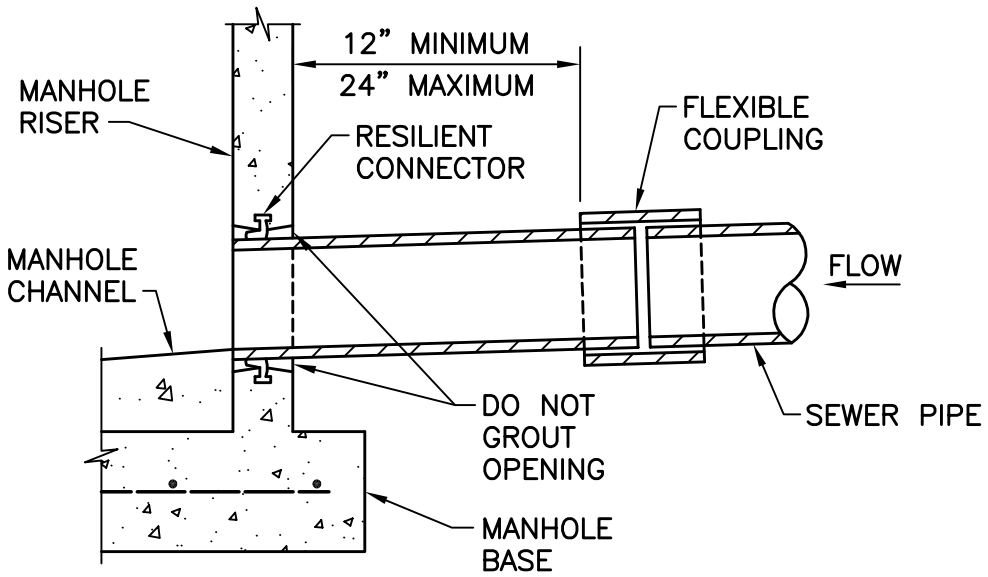

NOTES:

1. RESILIENT CONNECTOR SHALL CONFORM WITH ASTM C923.
2. RESILIENT CONNECTOR SHALL BE INSTALLED IN ACCORDANCE WITH MANUFACTURERS RECOMMENDATIONS.
3. FOR PIPE CONNECTIONS AT EXISTING MANHOLES, THE CONTRACTOR MAY CORE OR DRILL AN OPENING IN THE MANHOLE WALL AND GROUT IN THE RESILIENT CONNECTOR PER THE RESILIENT CONNECTOR MANUFACTURER'S RECOMMENDATIONS.

SCALE: 3/4" = 1'-0"

DATE: 7/2017

CITY AND COUNTY OF HONOLULU	STANDARD DETAILS	MANHOLE PIPE CONNECTION – RESILIENT CONNECTOR	S-24

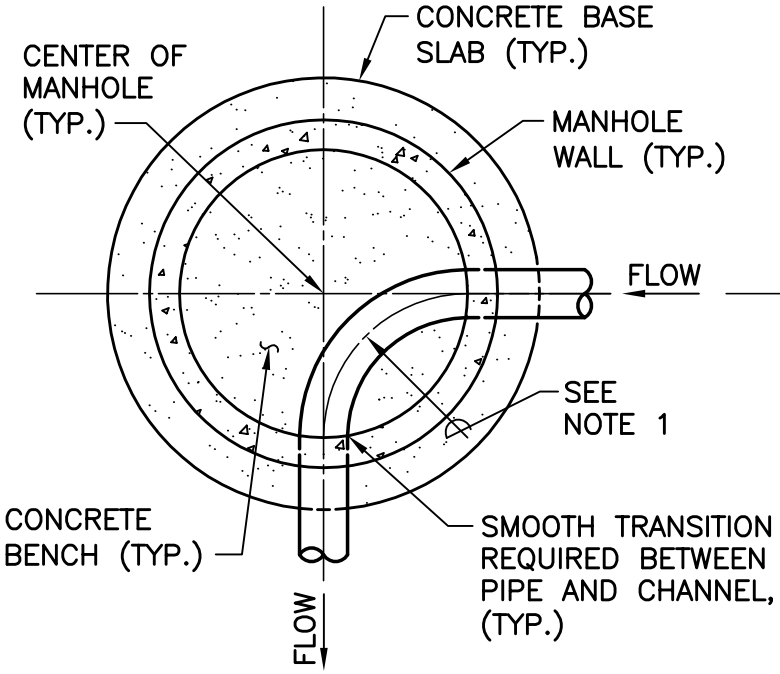

PLAN A – PIPE DIAMETER < 12"

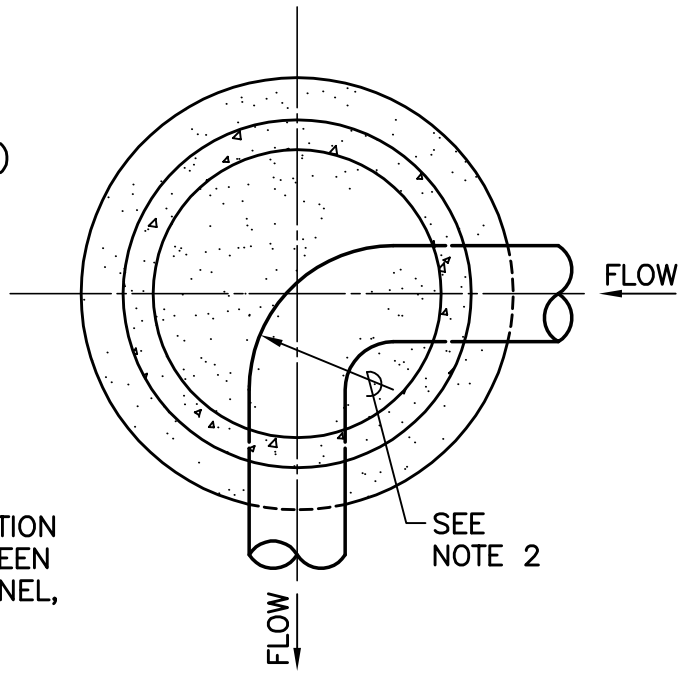

PLAN B – PIPE DIAMETER 12" TO 36"

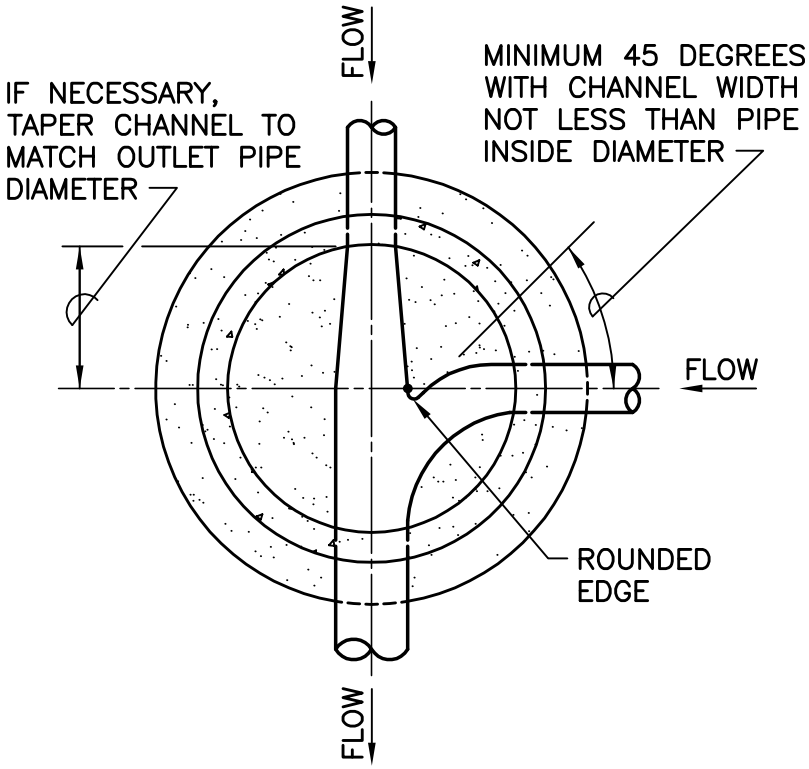

PLAN C – 90 DEGREE BRANCH LINE

NOTES:

1. THE RADIUS OF THE CHANNEL CENTERLINE FOR PIPES SMALLER THAN 12" SHALL BE 1/2 X INSIDE DIAMETER OF MANHOLE.
2. THE RADIUS OF OUTER CHANNEL WALL FOR PIPES 12" AND LARGER PIPES SHALL BE 1/2 X INSIDE DIAMETER OF MANHOLE.
3. ALL CHANNEL EDGES SHALL BE PROVIDED WITH SMOOTH ROUNDED EDGES.
4. OTHER MANHOLE CHANNEL CONFIGURATIONS SHALL BE SHOWN ON THE CONSTRUCTION DRAWINGS.

DATE: 7/2017

CITY AND COUNTY OF HONOLULU	STANDARD DETAILS	TYPICAL CHANNELIZATION OF SEWER MANHOLES	S–25

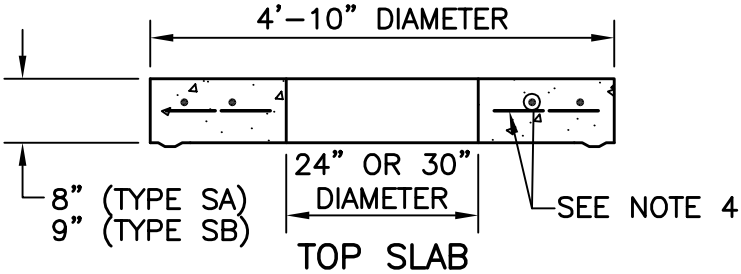

TOP SLAB

SCALE: 1/2" = 1'–0"

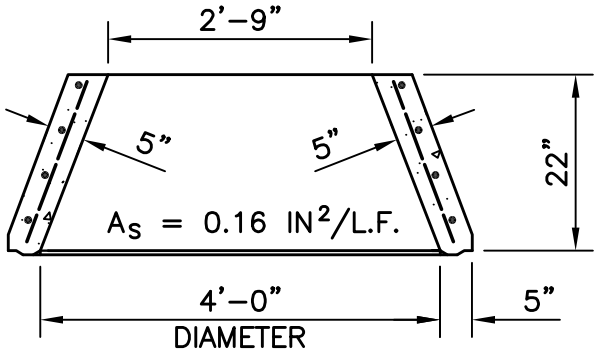

1'–10" CONE

SCALE: 1/2" = 1'–0"

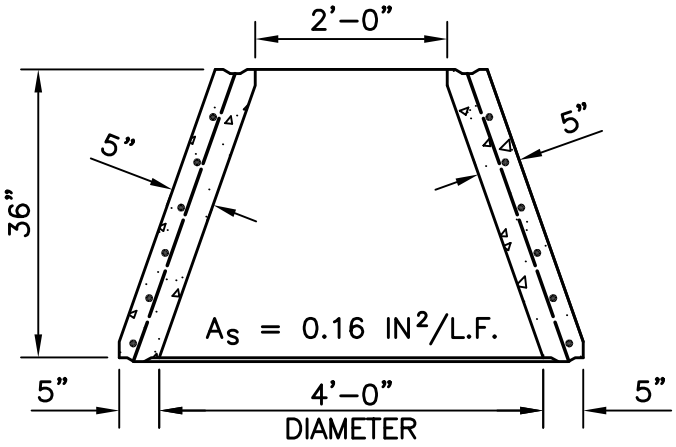

3'–0" CONE

SCALE: 1/2" = 1'–0"

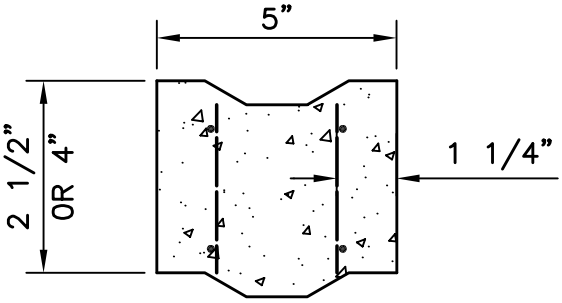

A_S = 0.12 IN²/L.F.

GRADE RING

SCALE: 3" = 1'–0"

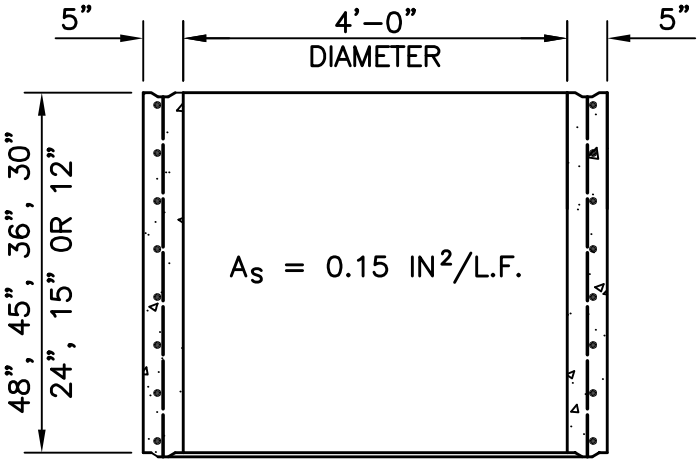

RISER

SCALE: 1/2" = 1'–0"

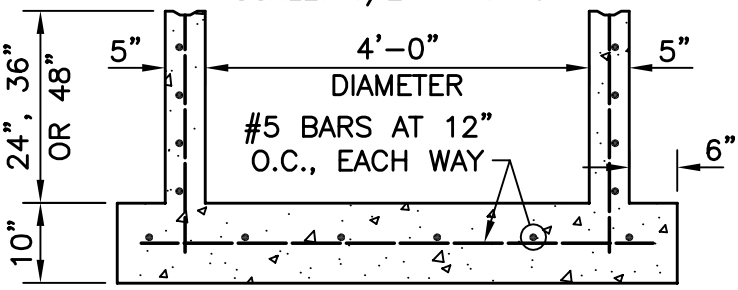

BASE SLAB

SCALE: 1/2" = 1'–0"

DATE: 7/2017

NOTES:

1. PRE–CAST SECTIONS SHALL CONFORM TO ASTM C478 AND THE AASHTO LRFD BRIDGE DESIGN SPECIFICATIONS.
2. PRIOR TO MANUFACTURING, DESIGNS OTHER THAN THOSE SHOWN ON THIS SHEET SHALL BE SUBMITTED TO THE CITY FOR APPROVAL.
3. INSTALL PRE–CAST FLEXIBLE SEALING GASKET CONFORMING TO ASTM C990 AT ALL MANHOLE JOINTS.
4. TOP SLAB SHALL BE DESIGNED FOR AASHTO HS–20 WHEEL LOADING.
5. STEEL INDICATED (A_S) IS MINIMUM REQUIRED.

SCALE: 1/2" = 1'–0"

SCALE: 3" = 1'–0"

CITY AND COUNTY OF HONOLULU	STANDARD DETAILS	4–FOOT DIAMETER PRE–CAST CONCRETE MANHOLE SECTIONS	S–26

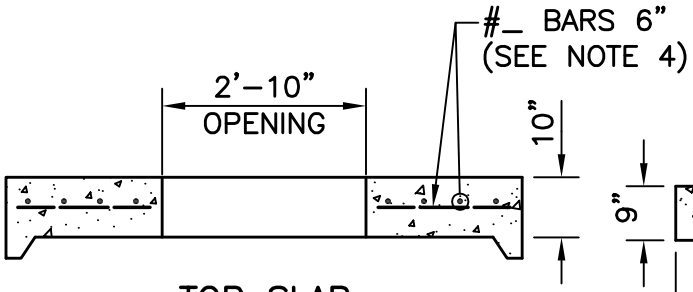

TOP SLAB

SCALE: 3/8" = 1'–0"

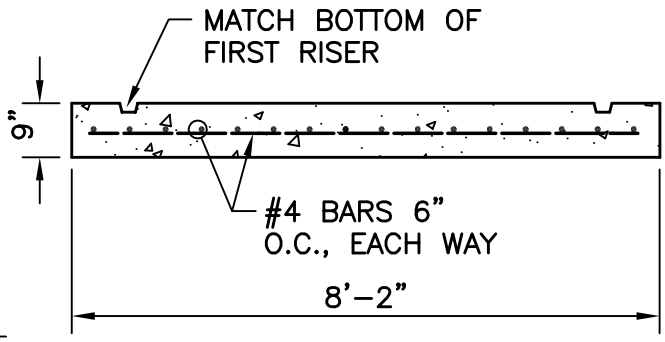

ALTERNATE BOTTOM SLAB

SCALE: 3/8" = 1'–0"

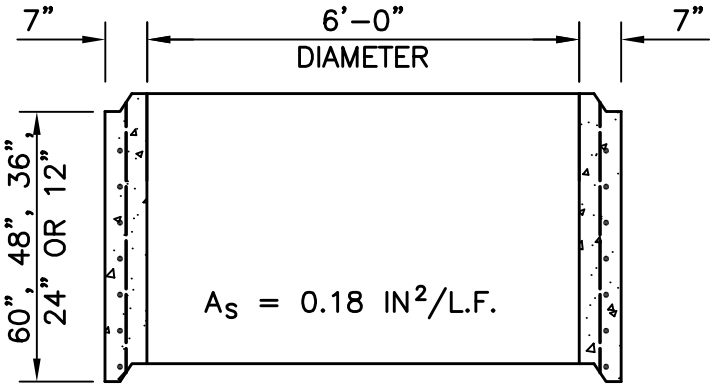

RISER

SCALE: 3/8" = 1'–0"

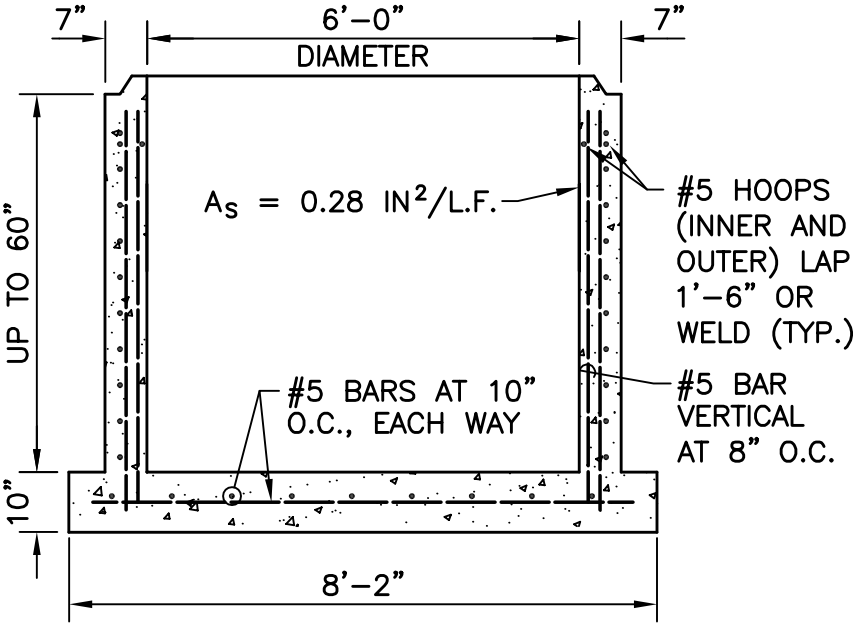

BOTTOM SLAB WITH INTEGRAL RISER

SCALE: 3/8" = 1'–0"

NOTES:

1. PRE–CAST SECTIONS SHALL CONFORM TO ASTM C478 AND THE AASHTO LRFD SPECIFICATIONS.
2. MANUFACTURERS MAY SUBMIT TO THE CITY FOR APPROVAL, PRIOR TO MANUFACTURING, DESIGNS OTHER THAN THOSE SHOWN ON THIS SHEET.
3. INSTALL PRE–CAST FLEXIBLE SEALING GASKET CONFORMING TO ASTM C990 AT ALL MANHOLE JOINTS.
4. TOP SLAB SHALL BE DESIGNED FOR AASHTO HS–20 WHEEL LOADING.
5. STEEL INDICATED (A_S) IS MINIMUM REQUIRED.
6. STRUCTURAL ANALYSIS REQUIRED.

SCALE: 3/8" = 1'–0"

DATE: 7/2017

CITY AND COUNTY OF HONOLULU	STANDARD DETAILS	6–FOOT DIAMETER PRE–CAST CONCRETE MANHOLE SECTIONS	S–27

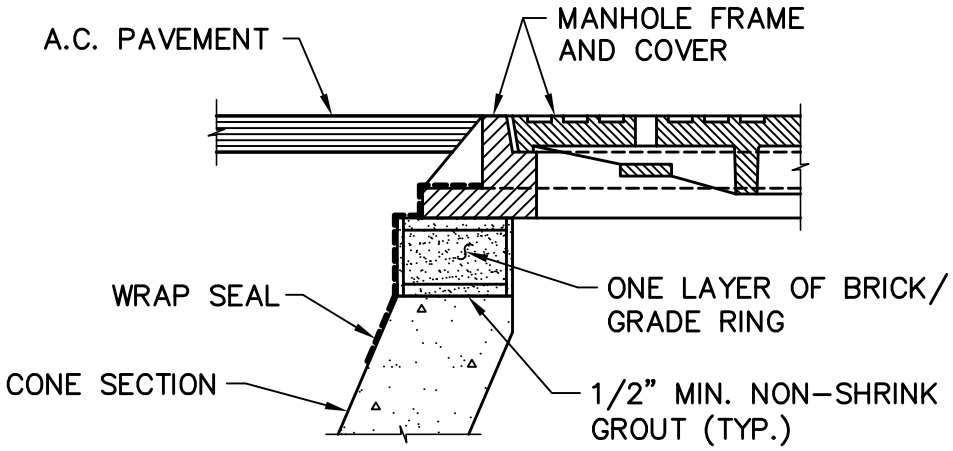

DETAIL A – NEW MANHOLE IN NEW ROAD

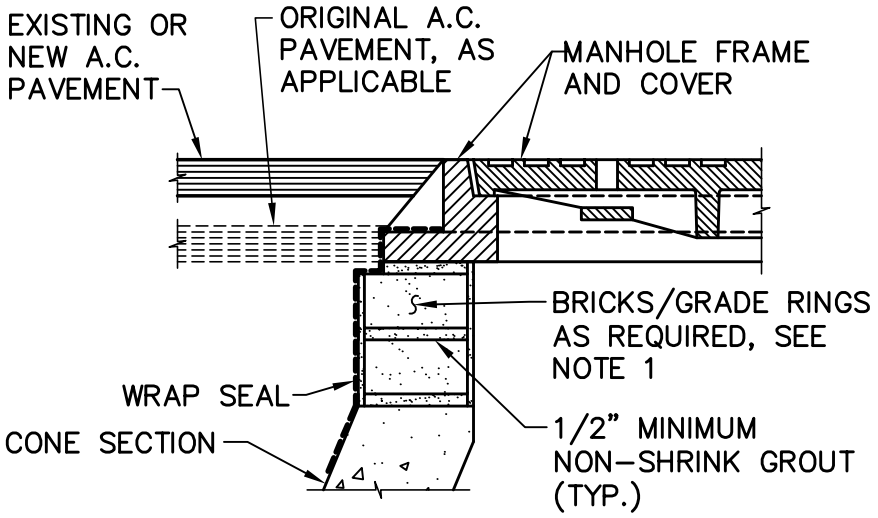

DETAIL B – NEW MANHOLE IN EXISTING ROAD OR ADJUSTING MANHOLE FOR ROAD REPAVEMENT

NOTES:

1. APPLY GROUT TO INSIDE AND OUTSIDE OF BRICKS TO FORM CONTINUOUS CYLINDRICAL SURFACE.

SCALE: 1 1/2" = 1'-0"

DATE: 7/2017

CITY AND COUNTY OF HONOLULU	STANDARD DETAILS	GRADE RING, LEVEL ADJUSTMENT, AND MANHOLE COVER LOCATED IN A.C. PAVEMENT	S-28

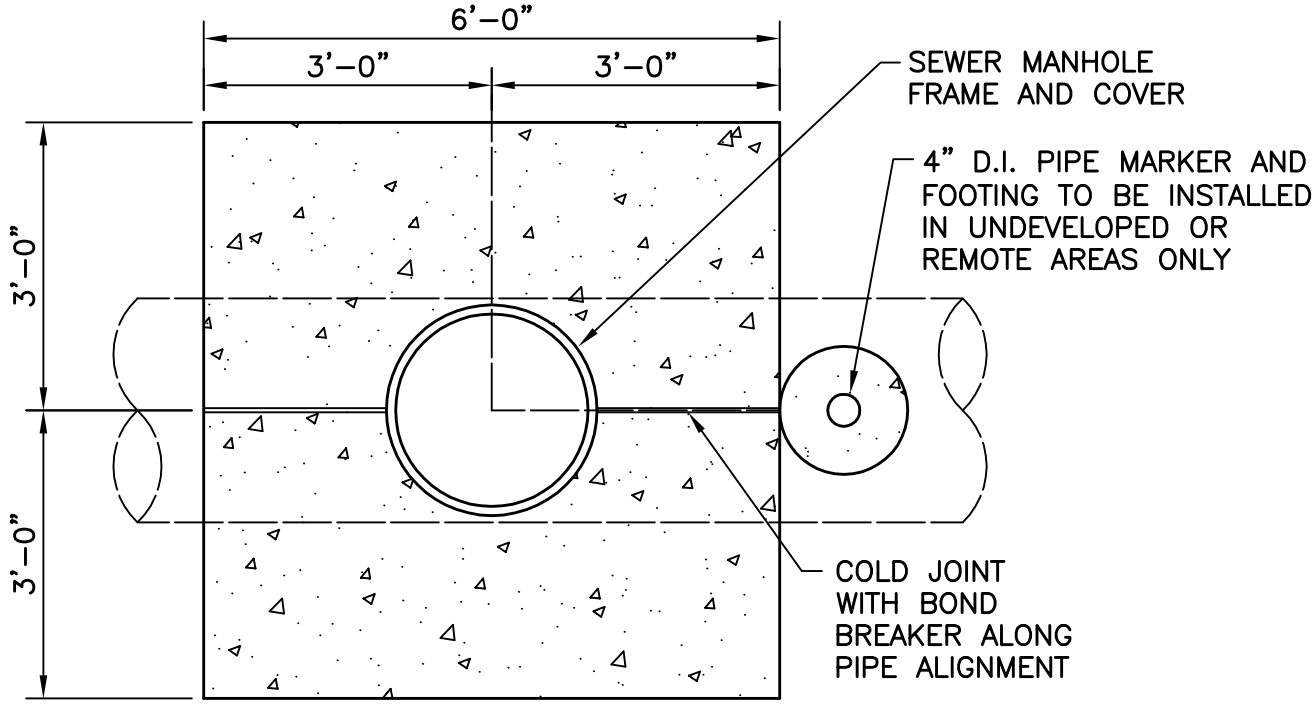

PLAN

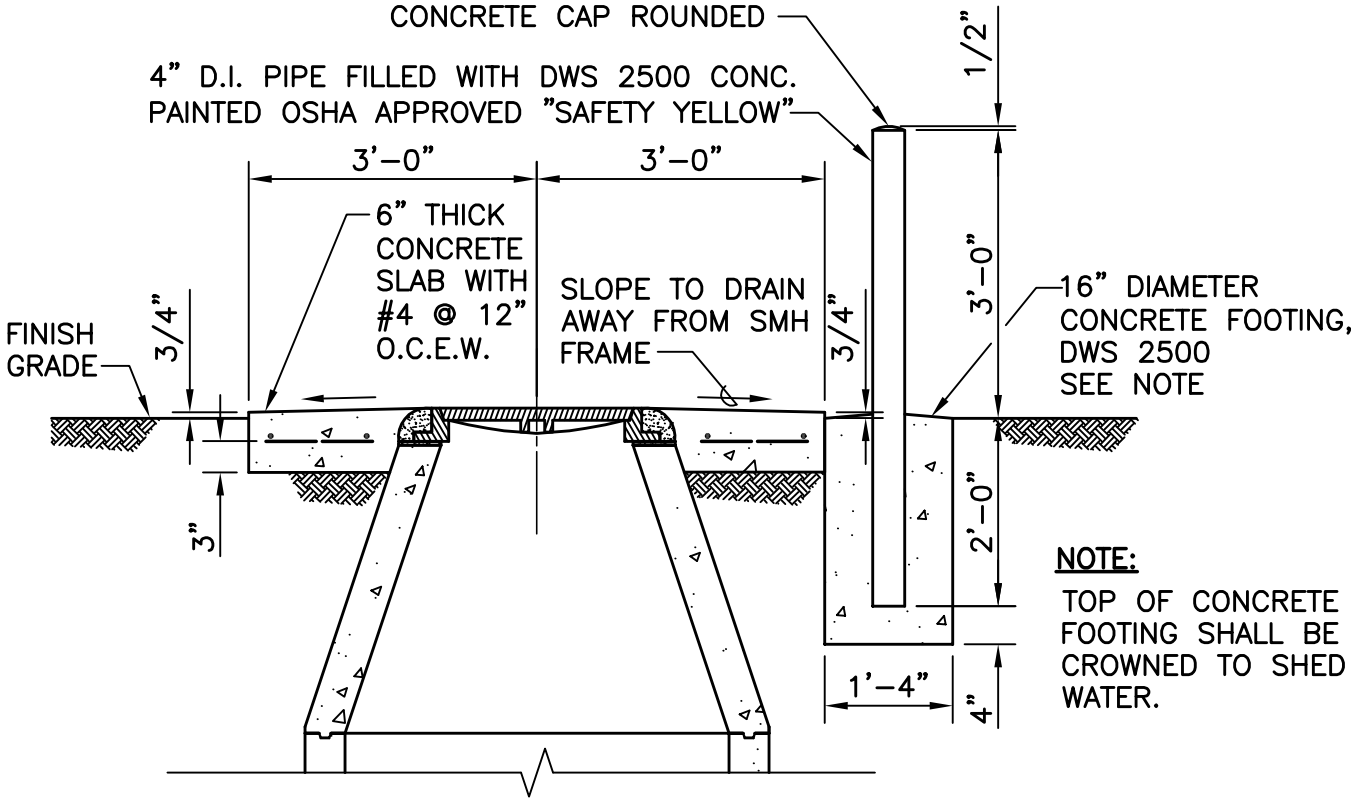

NOTE:

TOP OF CONCRETE FOOTING SHALL BE CROWNED TO SHED WATER.

ELEVATION

2' 0 2' 4'

SCALE: 1/2" = 1'–0"

DATE: 7/2017

CITY AND COUNTY OF HONOLULU	STANDARD DETAILS	MANHOLE FRAME AND COVER LOCATED IN UNPAVED AREAS	S–29

APPROXIMATE WEIGHT
158 POUNDS

NOTES:

1. THIS COVER IS USED WITH TYPE SA FRAME.
2. COVER SHALL CONFORM TO ASTM A48, CLASS NO. 30.

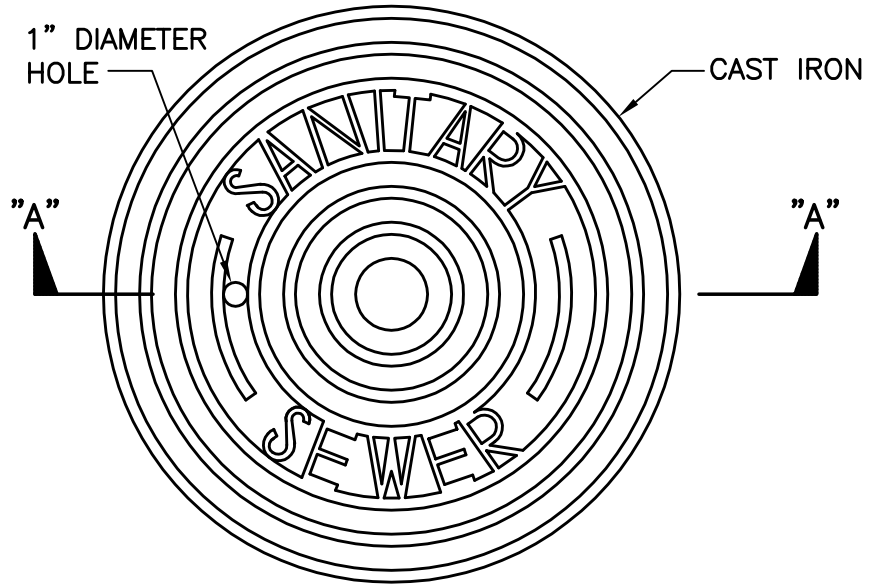

PLAN OF MANHOLE COVER

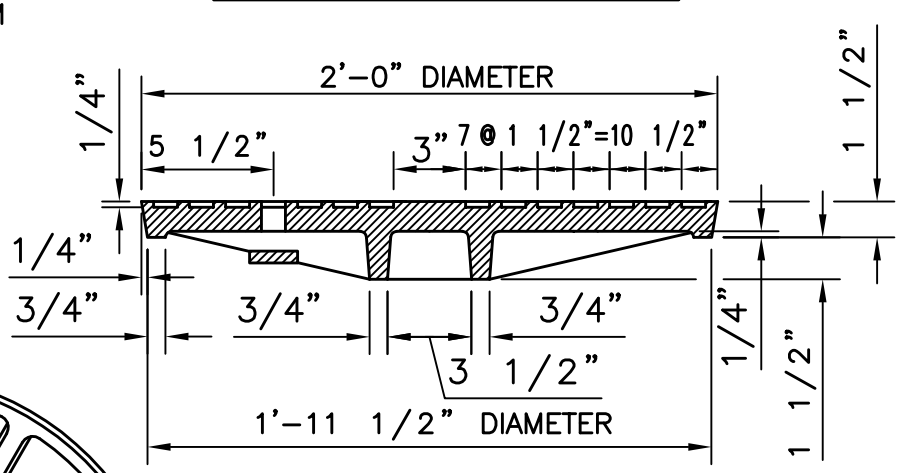

SECTION A-A

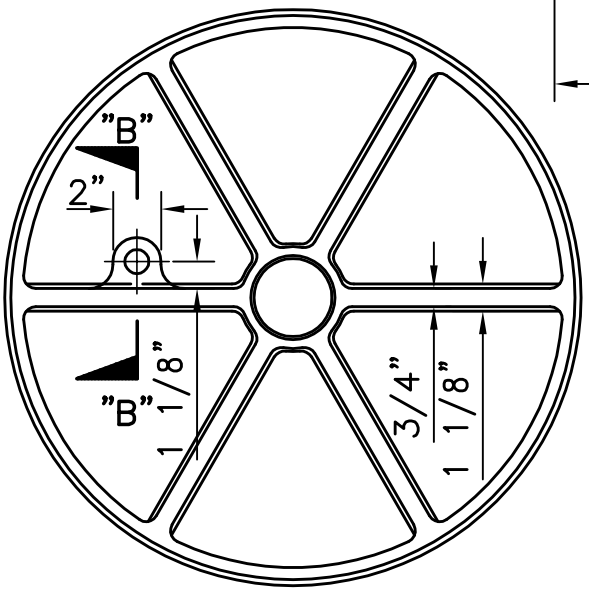

BOTTOM VIEW OF COVER

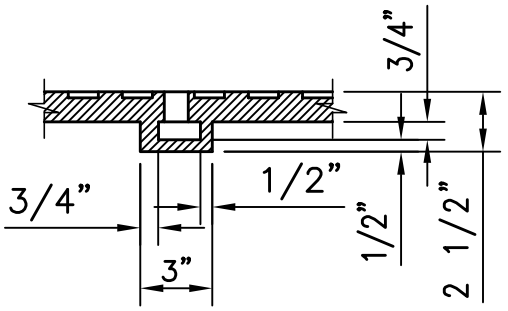

SECTION B-B

SCALE: 1 1/2" = 1'-0"

DATE: 7/2017

CITY AND COUNTY OF HONOLULU	STANDARD DETAILS	MANHOLE COVER – TYPE SA	S-30

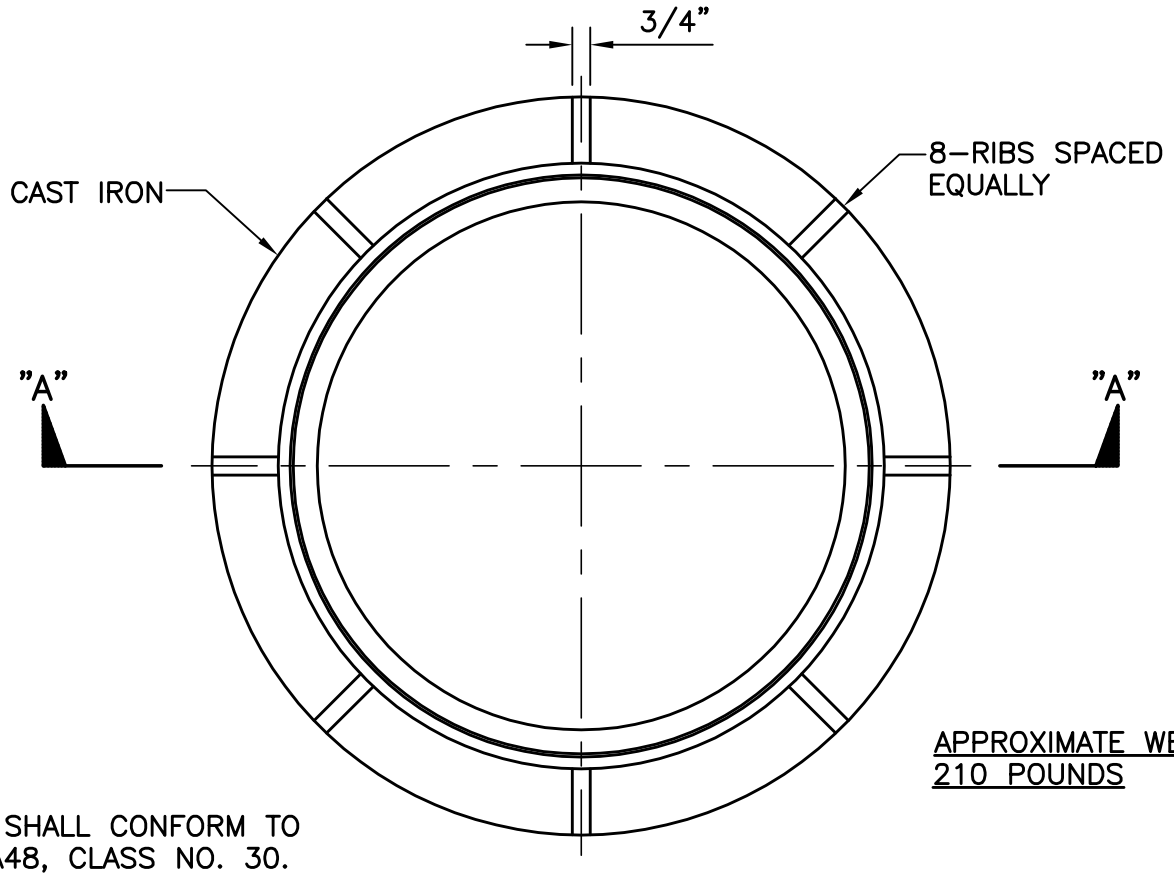

NOTE:

FRAME SHALL CONFORM TO ASTM A48, CLASS NO. 30.

APPROXIMATE WEIGHT 210 POUNDS

PLAN OF MANHOLE FRAME

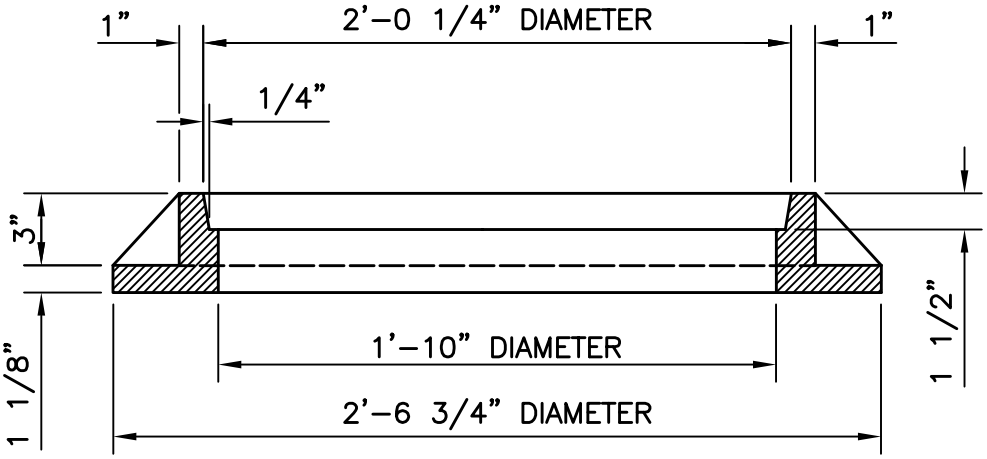

SECTION A-A

SCALE: 1 1/2" = 1'-0"

DATE: 7/2017

CITY AND COUNTY OF HONOLULU	STANDARD DETAILS	MANHOLE FRAME - TYPE SA	S-31

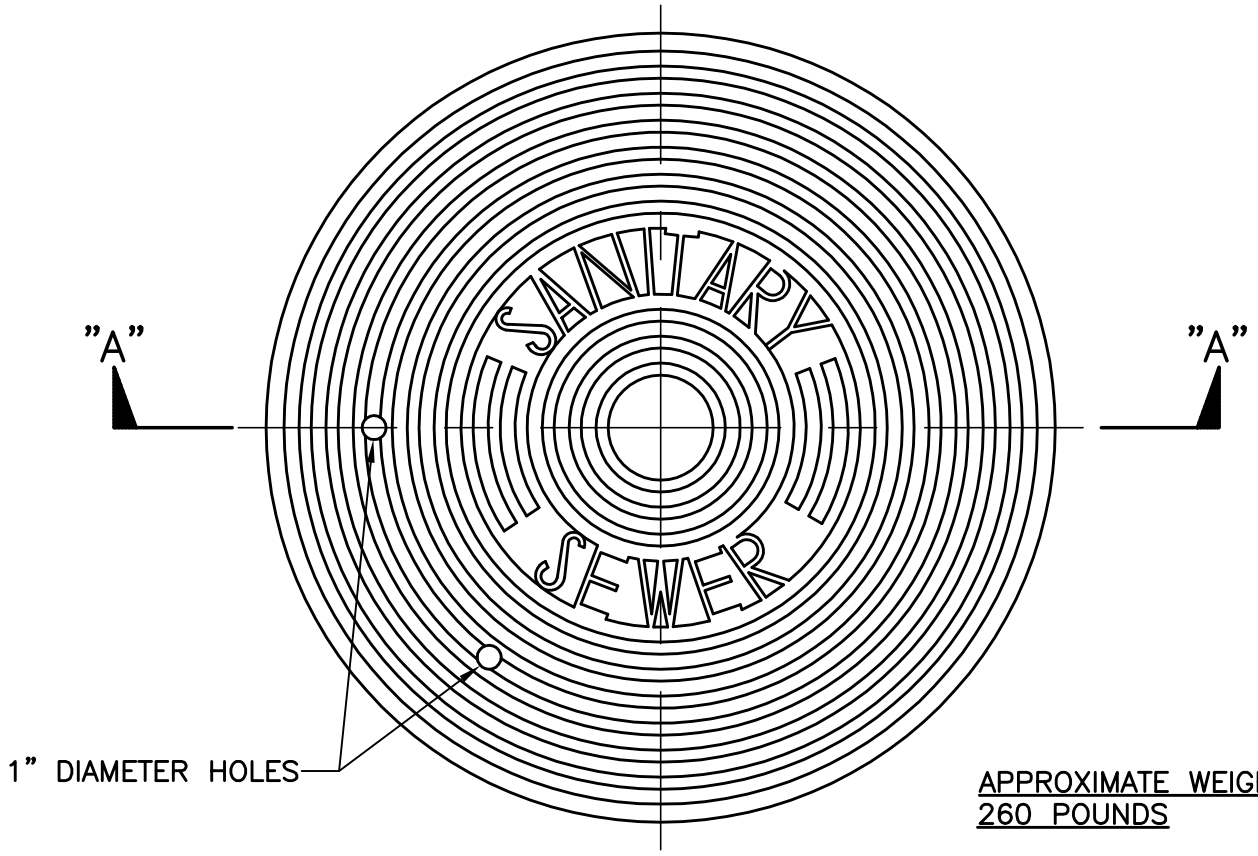

APPROXIMATE WEIGHT
260 POUNDS

PLAN VIEW

NOTE:

COVER SHALL CONFORM TO ASTM A48, CLASS NO. 30.

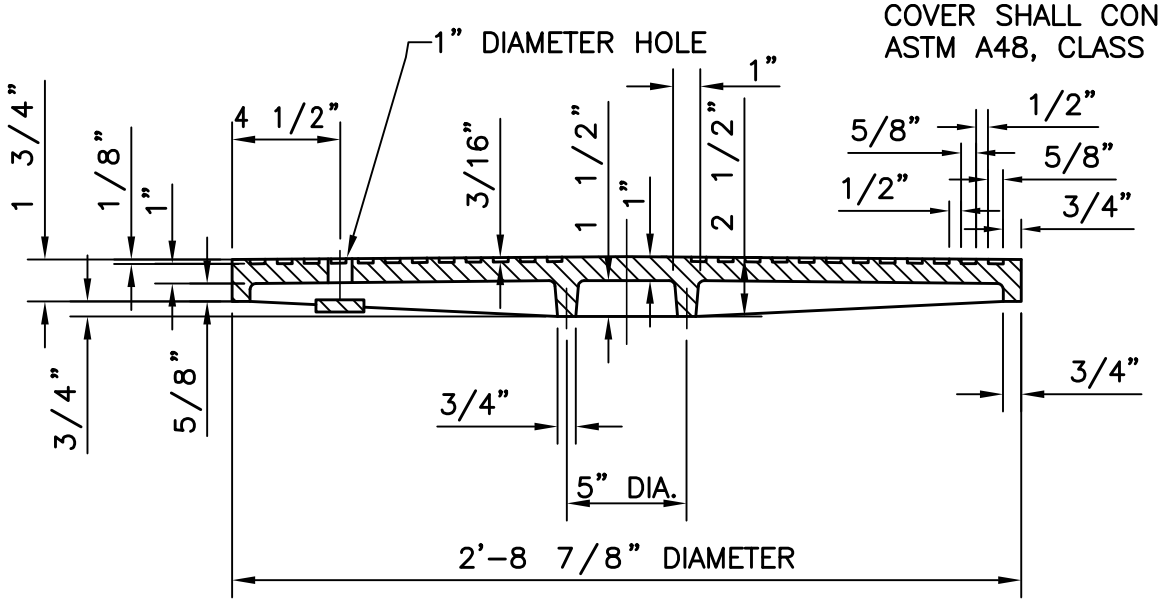

SECTION A-A

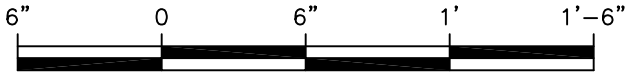

SCALE: 1 1/2" = 1'-0"

DATE: 7/2017

CITY AND COUNTY OF HONOLULU	STANDARD DETAILS	MANHOLE COVER – TYPE SB, TOP VIEW	S-32

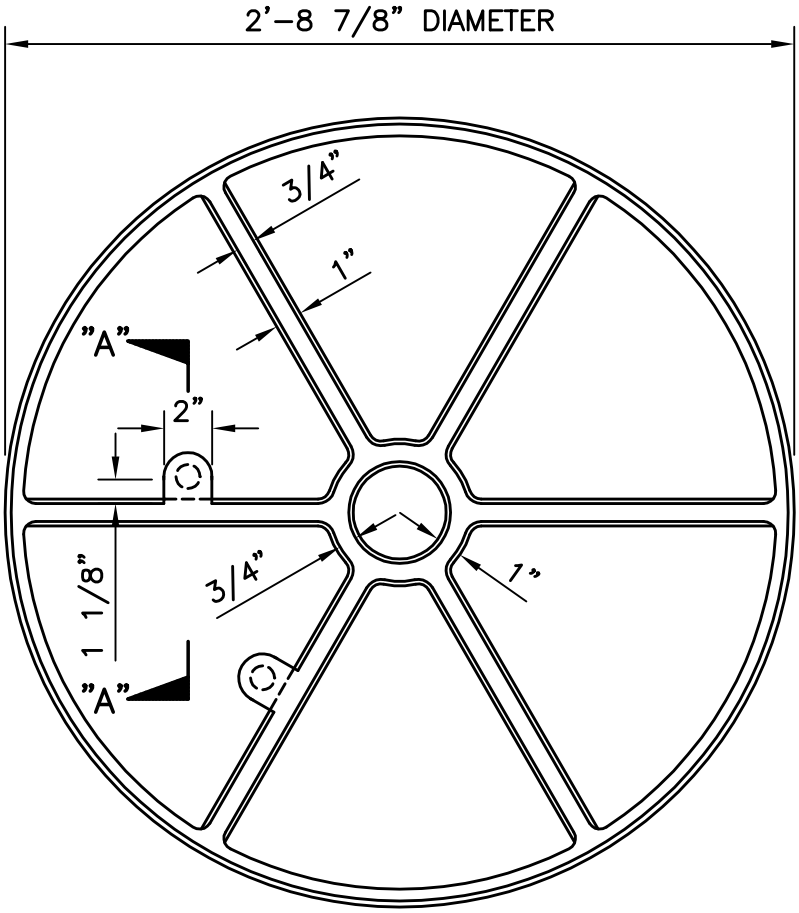

BOTTOM VIEW OF MANHOLE COVER

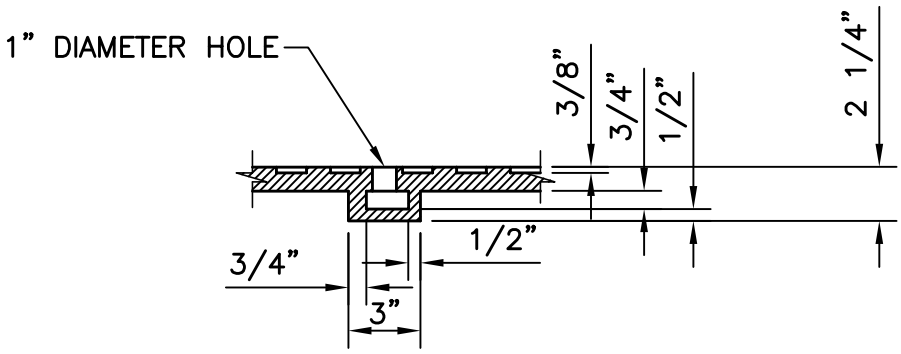

SECTION A-A

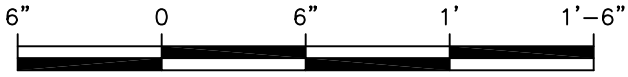

SCALE: 1 1/2" = 1'-0"

DATE: 7/2017

CITY AND COUNTY OF HONOLULU	STANDARD DETAILS	MANHOLE COVER – TYPE SB, BOTTOM VIEW	S-33

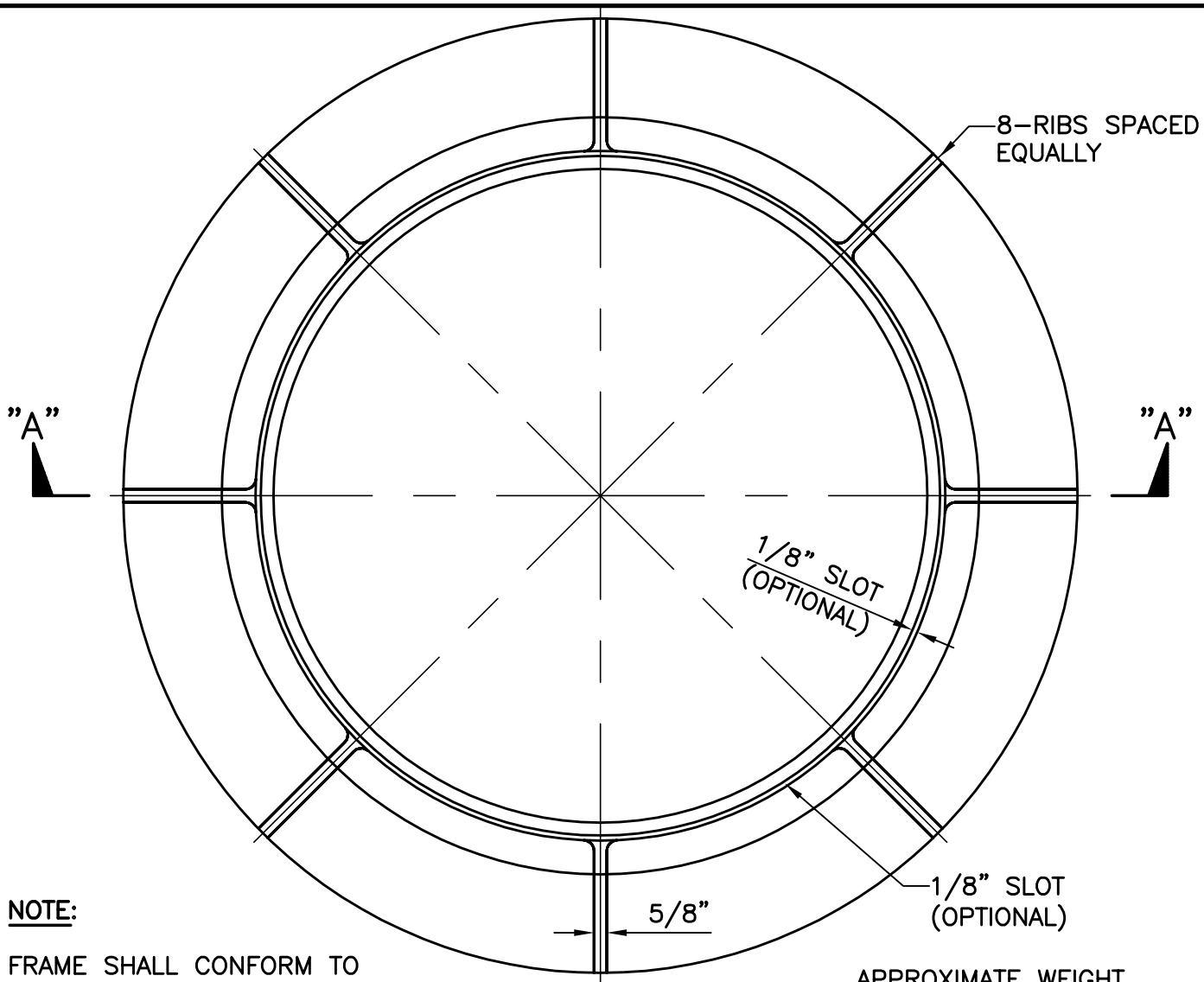

NOTE:

FRAME SHALL CONFORM TO ASTM A48, CLASS NO. 30.

PLAN VIEW

APPROXIMATE WEIGHT 480 POUNDS

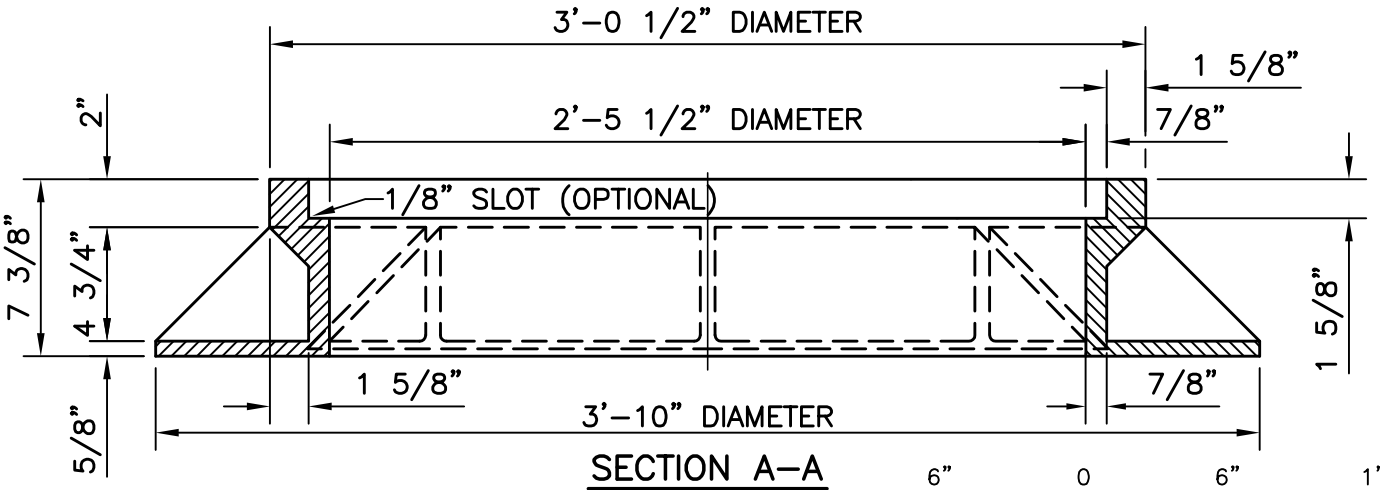

SECTION A–A

SCALE: 1 1/2" = 1'–0"

DATE: 7/2017

CITY AND COUNTY OF HONOLULU	STANDARD DETAILS	MANHOLE FRAME – TYPE SB	S–34

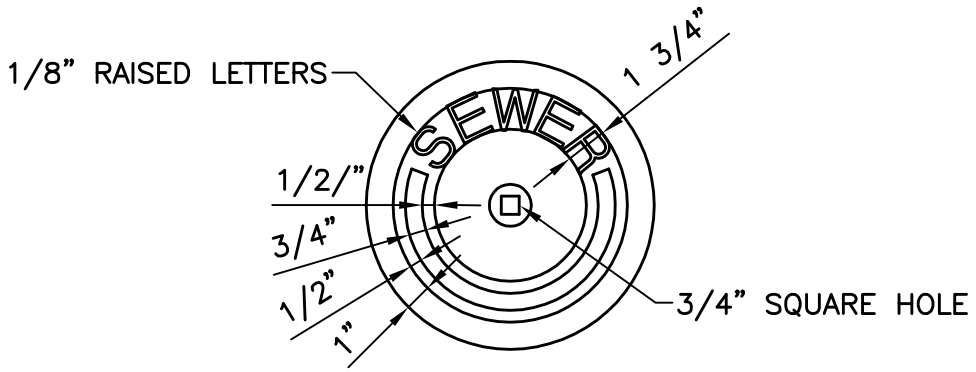

TOP OF COVER

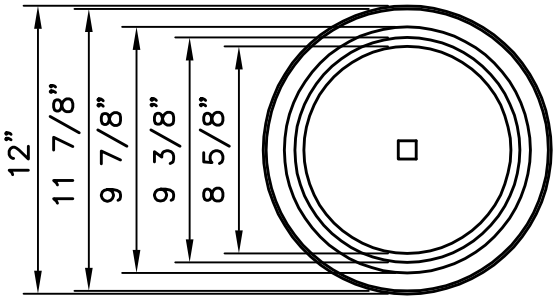

BOTTOM OF COVER

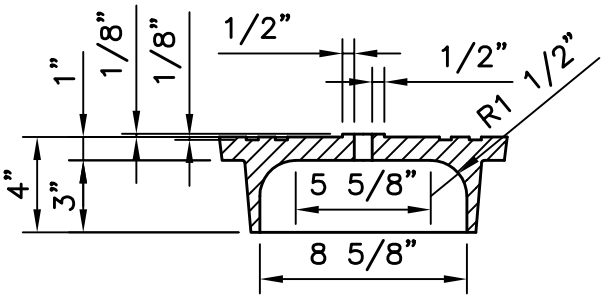

ELEVATION

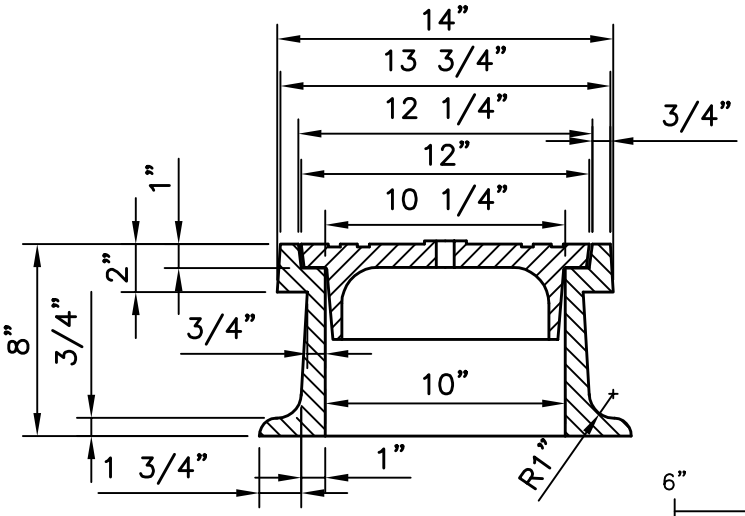

SECTION

SCALE: 1 1/2" = 1'-0"

DATE: 7/2017

CITY AND COUNTY OF HONOLULU	STANDARD DETAILS	DROP MANHOLE RISER CASTING	S-35