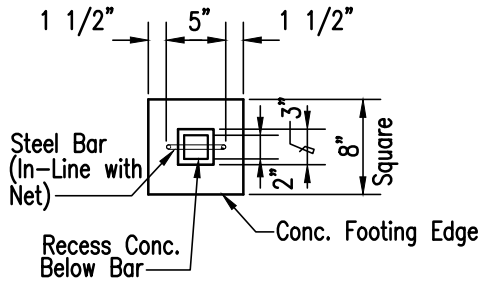

PLAN

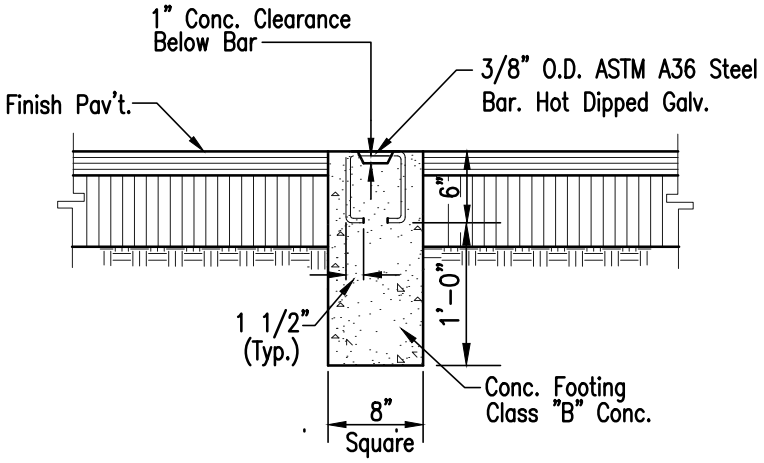

SECTION

NET ANCHOR DETAIL
Scale: 3/4"=1'-0"

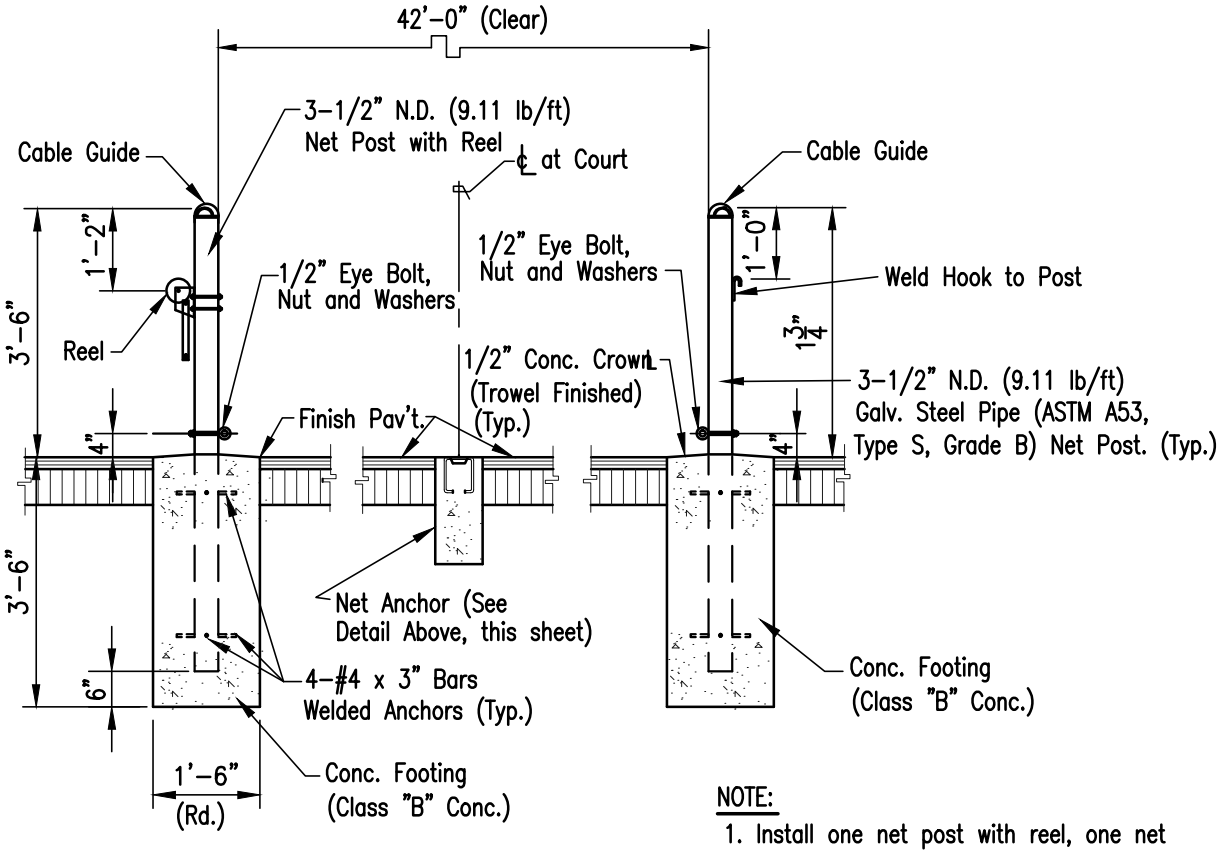

SECTION
Scale: 3/8"=1'-0"

NOTE:

1. Install one net post with reel, one net post with hook and one net anchor for each tennis court.
2. See Parks Std. Detail P-13 for Tennis Net Post Miscellaneous Details.

P-12(F)

P-12	STANDARD DETAILS	TENNIS COURT NET POST AND ANCHOR DETAIL SCALE: NOT TO SCALE REVISED: FEBRUARY 2007	CITY COUNTY OF HONOLULU