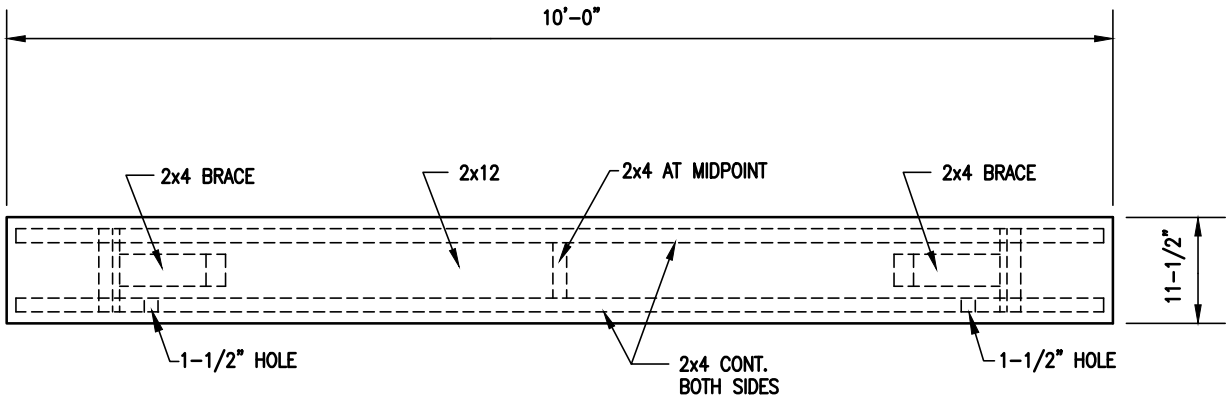

PLAN

NOT TO SCALE

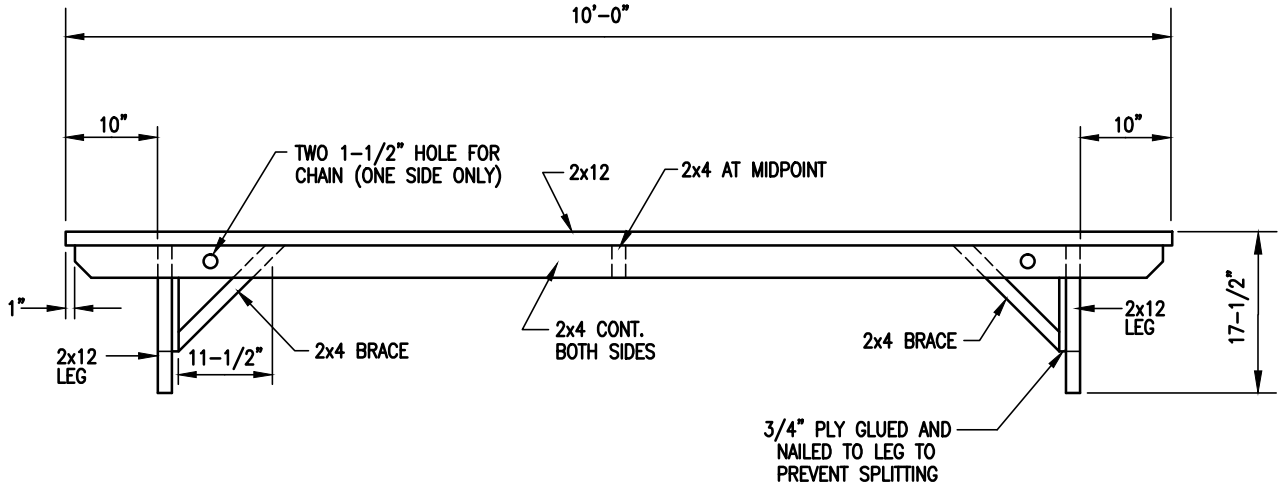

FRONT VIEW

NOT TO SCALE

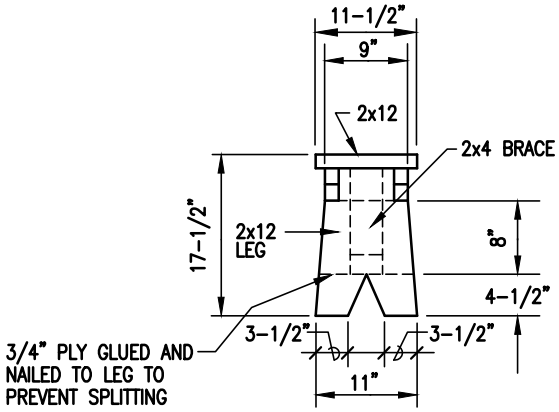

SIDE VIEW

NOT TO SCALE

NOTES:

1. ALL WOOD SHALL BE S4S, D.F., "C" OR BETTER, WOLMANIZED.

2. PAINTING SCHEDULE:

   A) 1 COAT DEVOE #1102 ALL WEATHER PRIMER

   B) 2 COATS DEVOE 70xx MIRROLOC ENAMEL (PARK GREEN)

M-19

CITY COUNTY OF HONOLULU	PLAYER'S BENCH DETAIL SCALE: NOT TO SCALE REVISED: APRIL 2003	STANDARD DETAILS	M-19