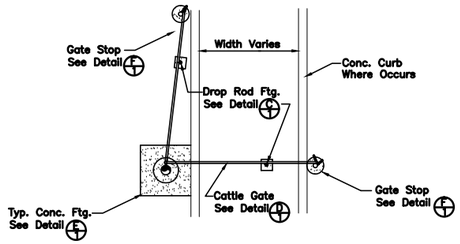

HALF GATE

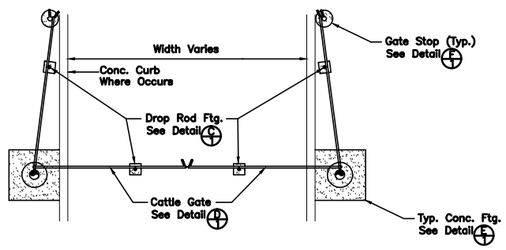

FULL GATE

A 1 LAYOUT PLAN
SCALE: 1/4"=1'-0"

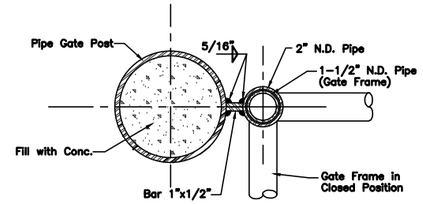

SECTION
SCALE: 3"=1'-0"

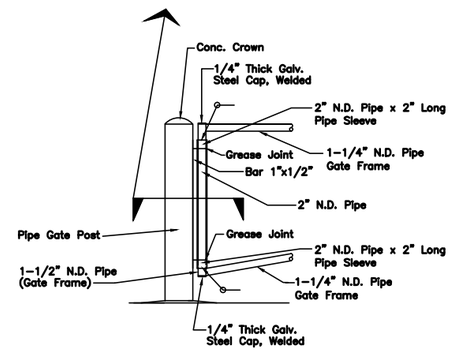

ELEVATION
SCALE: 3/4"=1'-0"

B 1 HINGE DETAIL

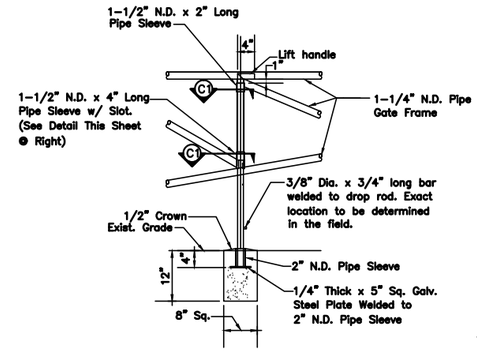

FRONT ELEVATION
SCALE: 3/4"=1'-0"

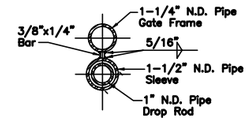

SECTION "C1"
SCALE: 3"=1'-0"

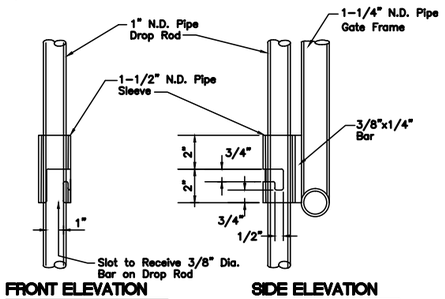

FRONT ELEVATION
SCALE: 3"=1'-0"

SIDE ELEVATION
SCALE: 3"=1'-0"

C 1 DROP ROD DETAILS

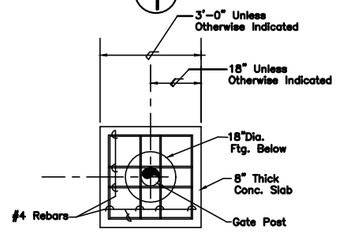

PLAN

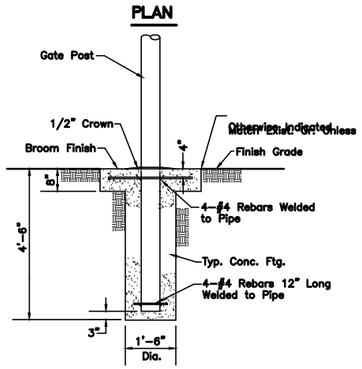

SECTION

E 1 FOOTING DETAIL
SCALE: 1/2"=1'-0"

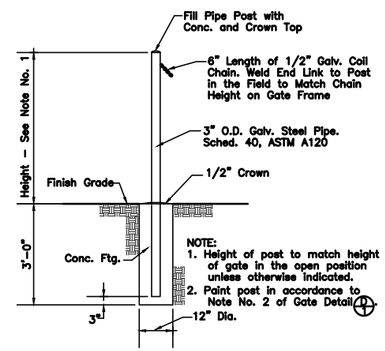

ELEVATION

F 1 GATE STOP DETAIL
SCALE: 1/2"=1'-0"

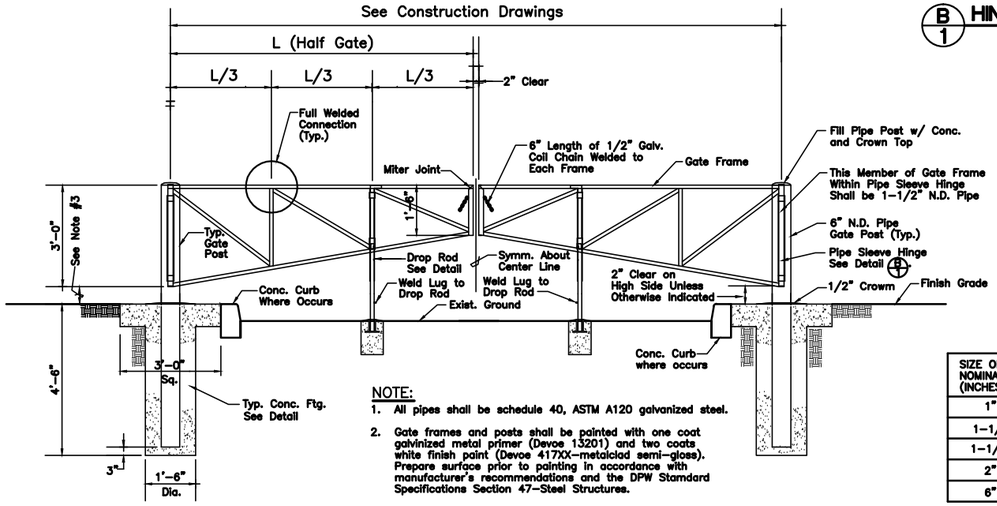

NOTE:

1. All pipes shall be schedule 40, ASTM A120 galvanized steel.
2. Gate frames and posts shall be painted with one coat galvinized metal primer (Devoe 13201) and two coats white finish paint (Devoe 417XX-metalclad semi-gloss). Prepare surface prior to painting in accordance with manufacturer's recommendations and the DPW Stamdard Specifications Section 47-Steel Structures.
3. Adjust clear dimension to make both frames level with each other and to allow ground clearances for gate swing.
4. All welds and damaged galvanized surfaces shall be painted with 2 coats of ZRC Cold Galvanizing Compound prior to painting.

D 1 GATE DETAIL
SCALE: 1/2"=1'-0"

SIZE OF PIPE NOMINAL DIA. (INCHES)	WEIGHT PER FOOT LBS
1"	1.68 LB/FT
1-1/4"	2.27 LB/FT
1-1/2"	2.72 LB/FT
2"	3.65 LB/FT
6"	18.97 LB/FT

DEPARTMENT OF DESIGN AND CONSTRUCTION
CITY & COUNTY OF HONOLULU
FACILITIES DESIGN AND ENGINEERING

CATTLE GATE

GATE DETAILS

DESIGNED BY: MS
DRAWN BY: MS/VY
REVIEWED BY:
DATE: Oct. 2001
APPROVED:
CHIEF, FACILITIES DESIGN AND ENGINEERING
DRAWING NO.
SHEET 1 OF 1
FILE NO. STANDARD

M-17(FF)

CITY COUNTY OF HONOLULU	CATTLE GATE SCALE: NOT TO SCALE REVISED: APRIL 2003	STANDARD DETAILS	M-17