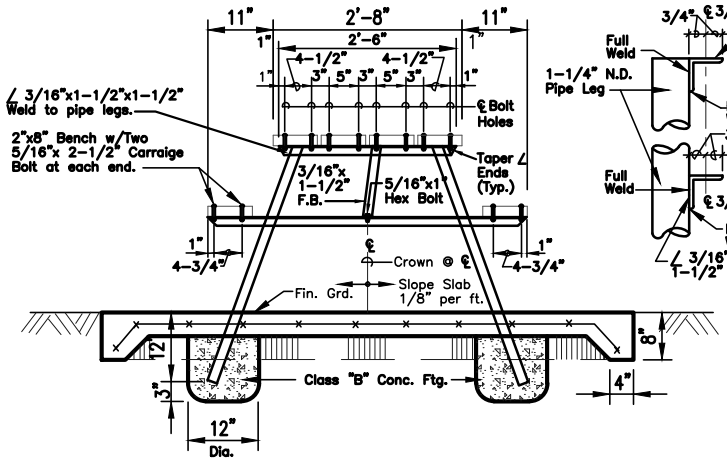

SIDE ELEVATION

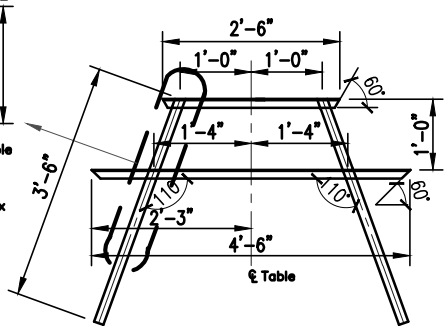

FABRICATION ELEVATION

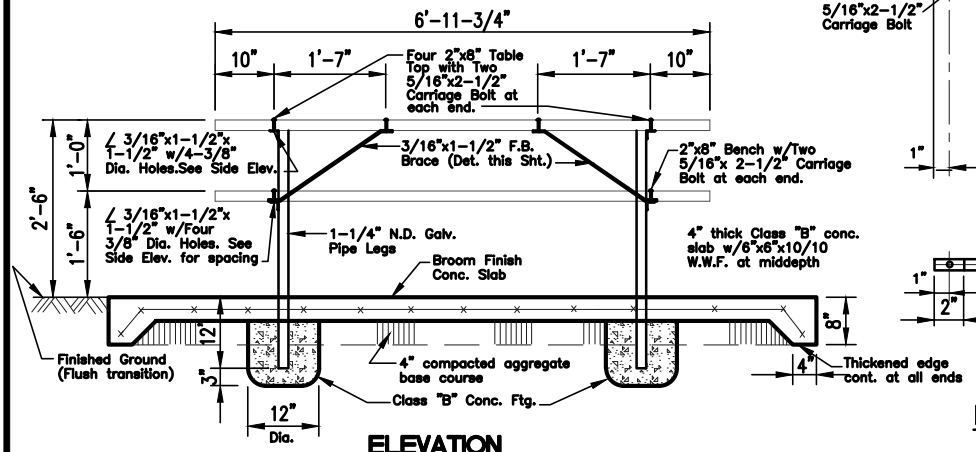

ELEVATION

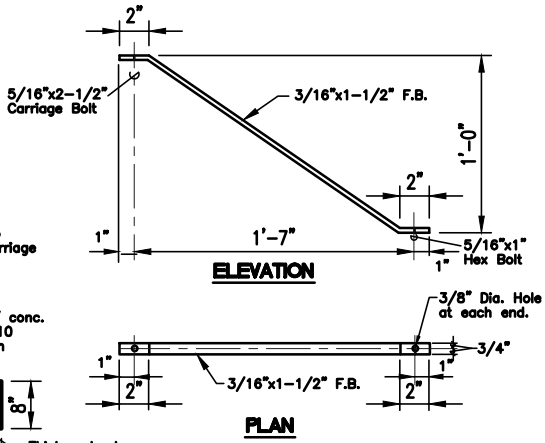

ELEVATION

PLAN

F.B. BRACE DETAIL

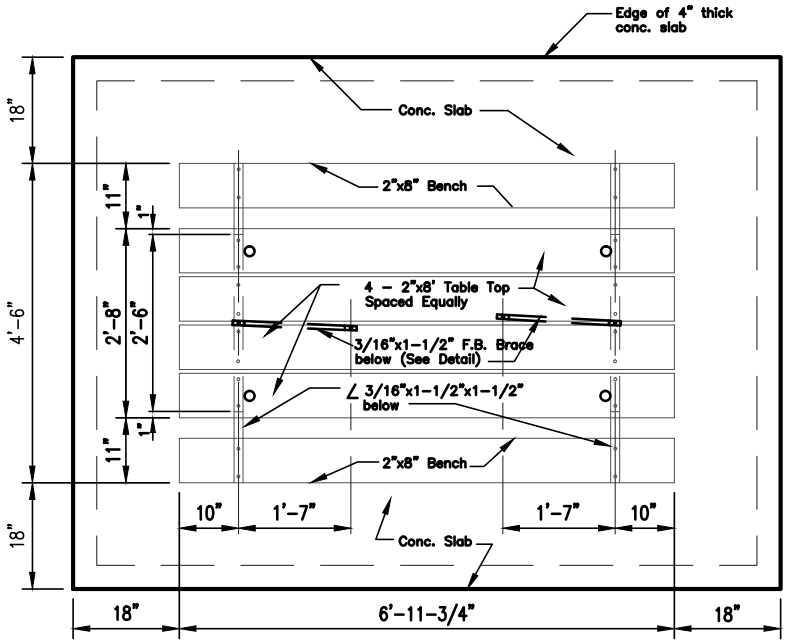

PLAN

NOTES:

1. All welds shall be ground smooth.
2. Painting:
   A) Metal Surfaces—Wash surface with paint thinner and brush off with stiff brush.
      1 coat Devoe #13201 Galv. Metal Primer.
      2 coats Devoe Bar-Ox Industrial Gloss Enamel Finish.
   B) Wood Surfaces:
      1 coat Devoe #1102 All Weather Primer.
      2 coats Devoe 70xx Mirrolac Enamel.
3. Materials:
   A) 1-1/4"N.D.(2.27lb/ft) x3'-6" Length G.I. Pipe (4 Required)
   B) ∠ 3/16"x1-1/2"x1-1/2"x2'-6" Length (2 Required)
   C) ∠ 3/16"x1-1/2"x1-1/2"x4'-6" Length (2 Required)
   D) 3/16"x1-1/2"x2'-0" Length F.B. (2 Required)
   E) 5/16"x2-1/2" Carriage Bolts (26 Req'd.)
   F) 5/16"x1" Hex Bolt (2 Req'd.)
   G) 2"x8"x6'-11-3/4" S4S, D.F., "C" or Better (6 Lengths), Wolmanized.
4. All structural steel shall be ASTM A36 and hot-dipped galvanized.
5. All bolts shall be galv. ASTM A307 and shall include nuts and washers.

M-14

M-14	STANDARD DETAILS	PICNIC TABLE DETAIL (WOOD)	CITY COUNTY OF HONOLULU
		REVISED: APRIL 2003 SCALE: NOT TO SCALE	