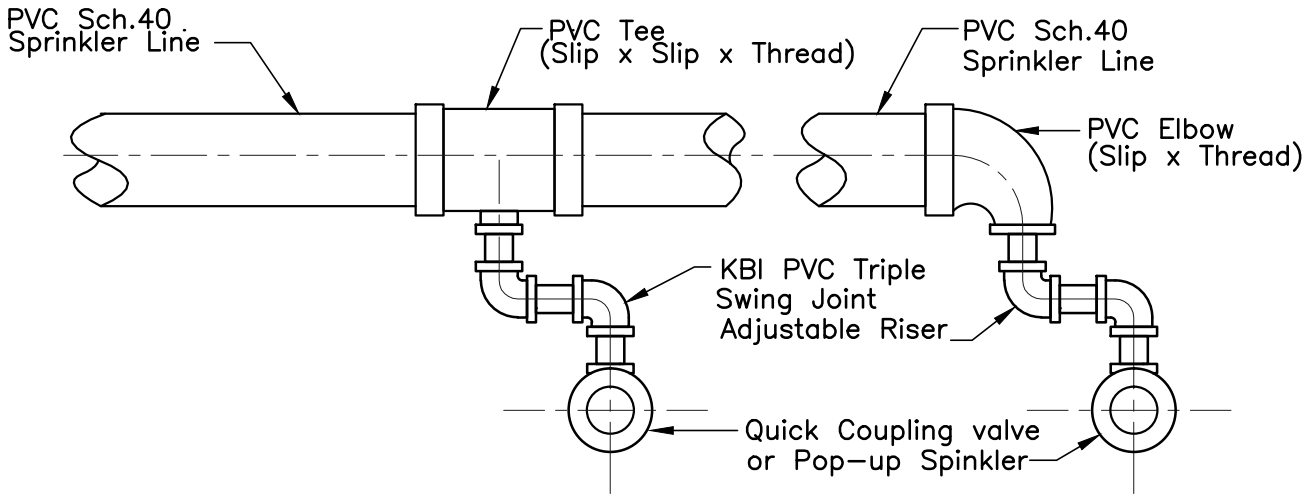

END OF LINE

PLAN-IN LINE

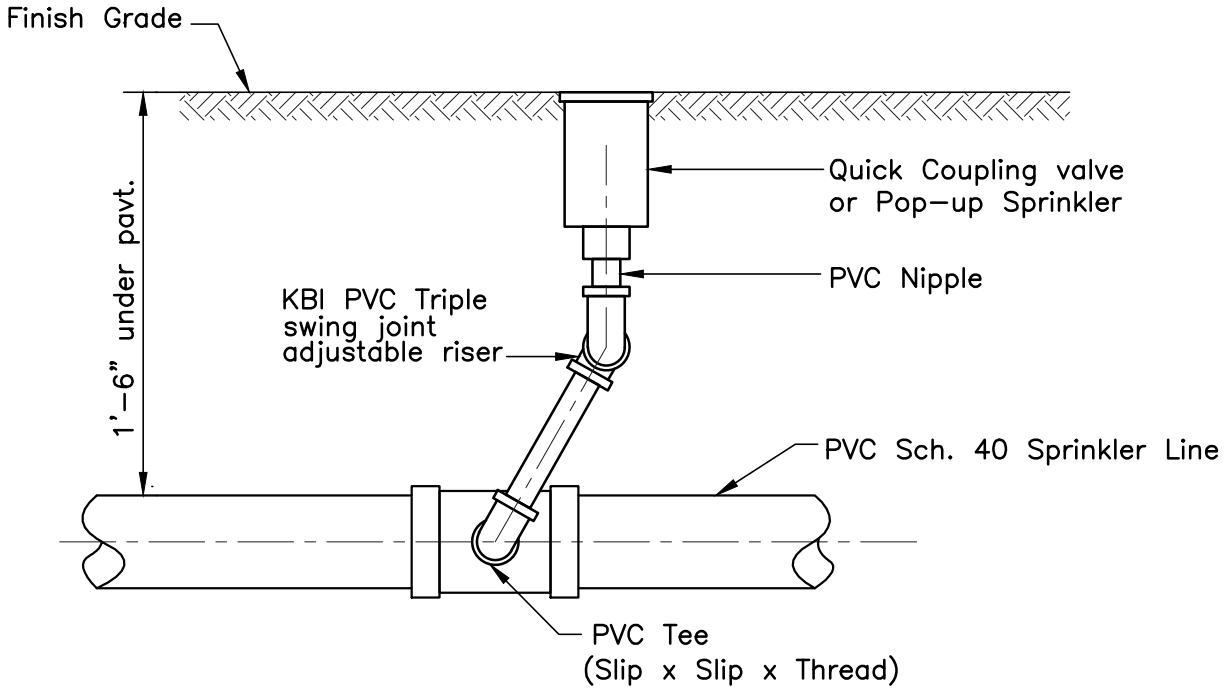

ELEVATION

I-8(F)

I-8	STANDARD DETAILS	PVC TRIPLE SWING JOINT DETAIL SCALE: NOT TO SCALE REVISED: APRIL 2003	CITY COUNTY OF HONOLULU