HEIGHT "X"	PLANTING	HEAD
12"	Shrubs	Shrub
8"	Groundcovers	Shrub
2"	Trees, Planters	Bubbler

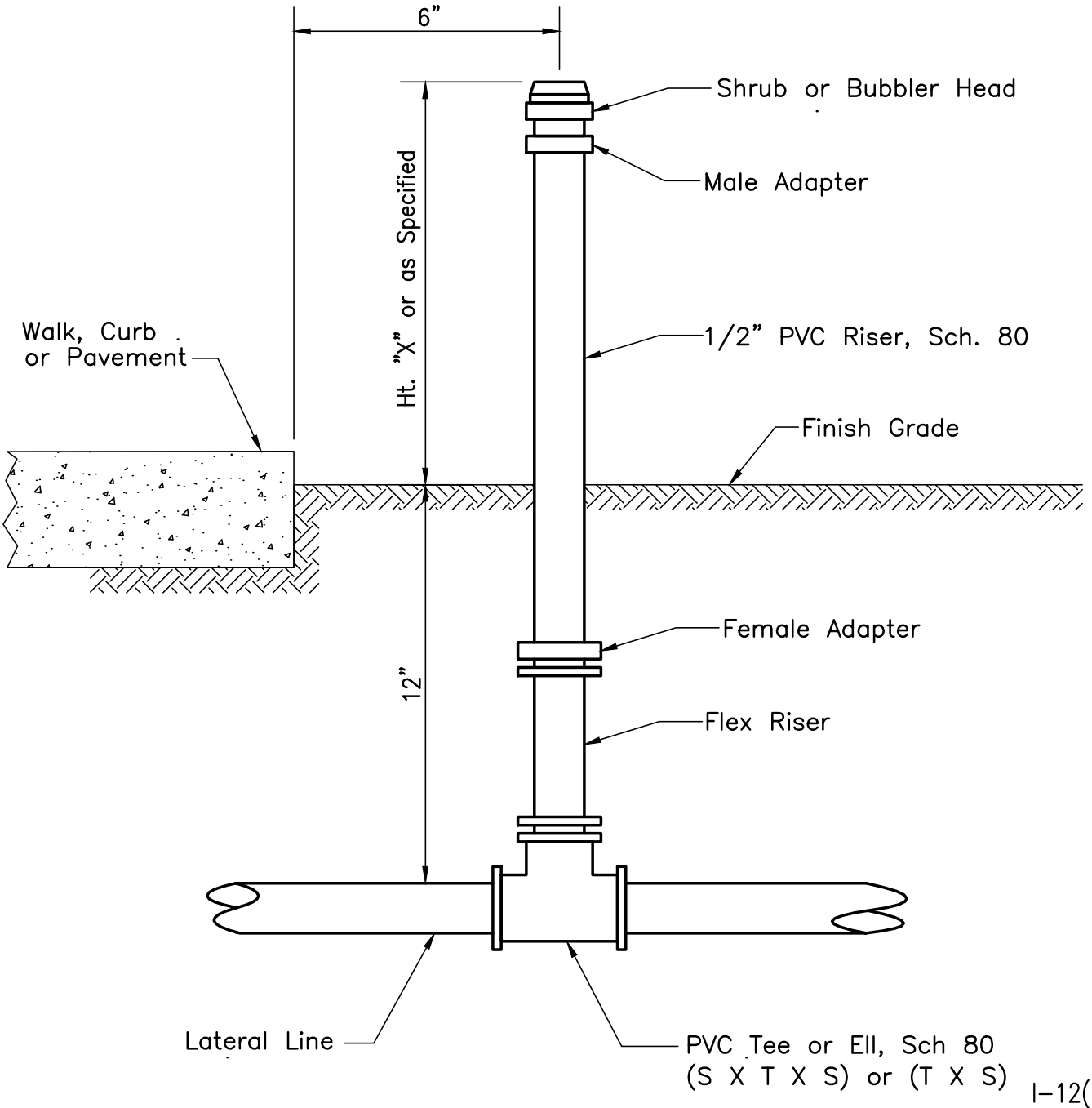

I-12(F)

I-12	STANDARD DETAILS	SHRUB HEAD DETAIL SCALE: NOT TO SCALE REVISED: APRIL 2003	CITY COUNTY OF HONOLULU