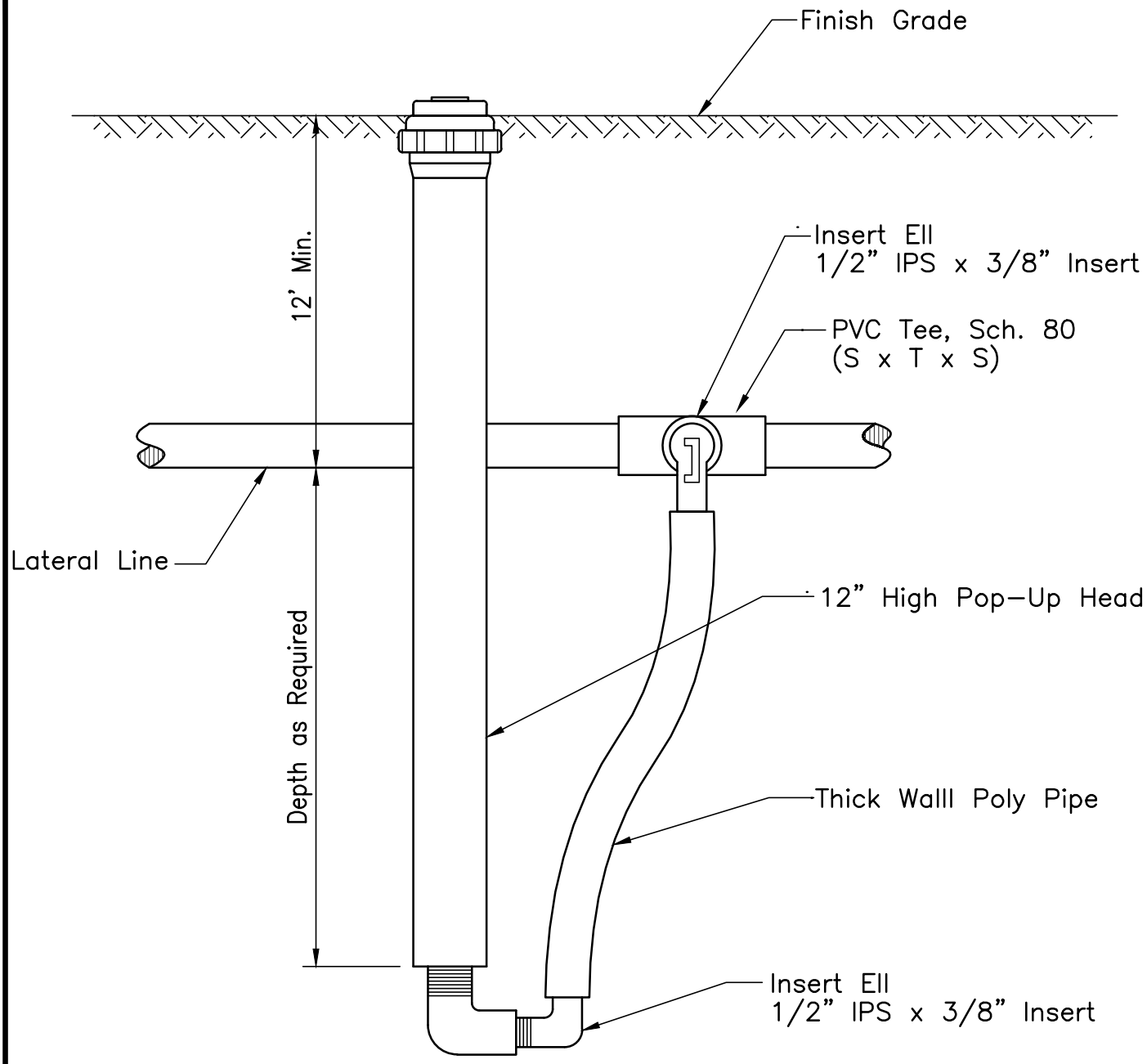

I-11(F)

CITY COUNTY OF HONOLULU	**12" POP-UP HEAD DETAIL** SCALE: NOT TO SCALE REVISED: APRIL 2003	STANDARD DETAILS	**I-11**