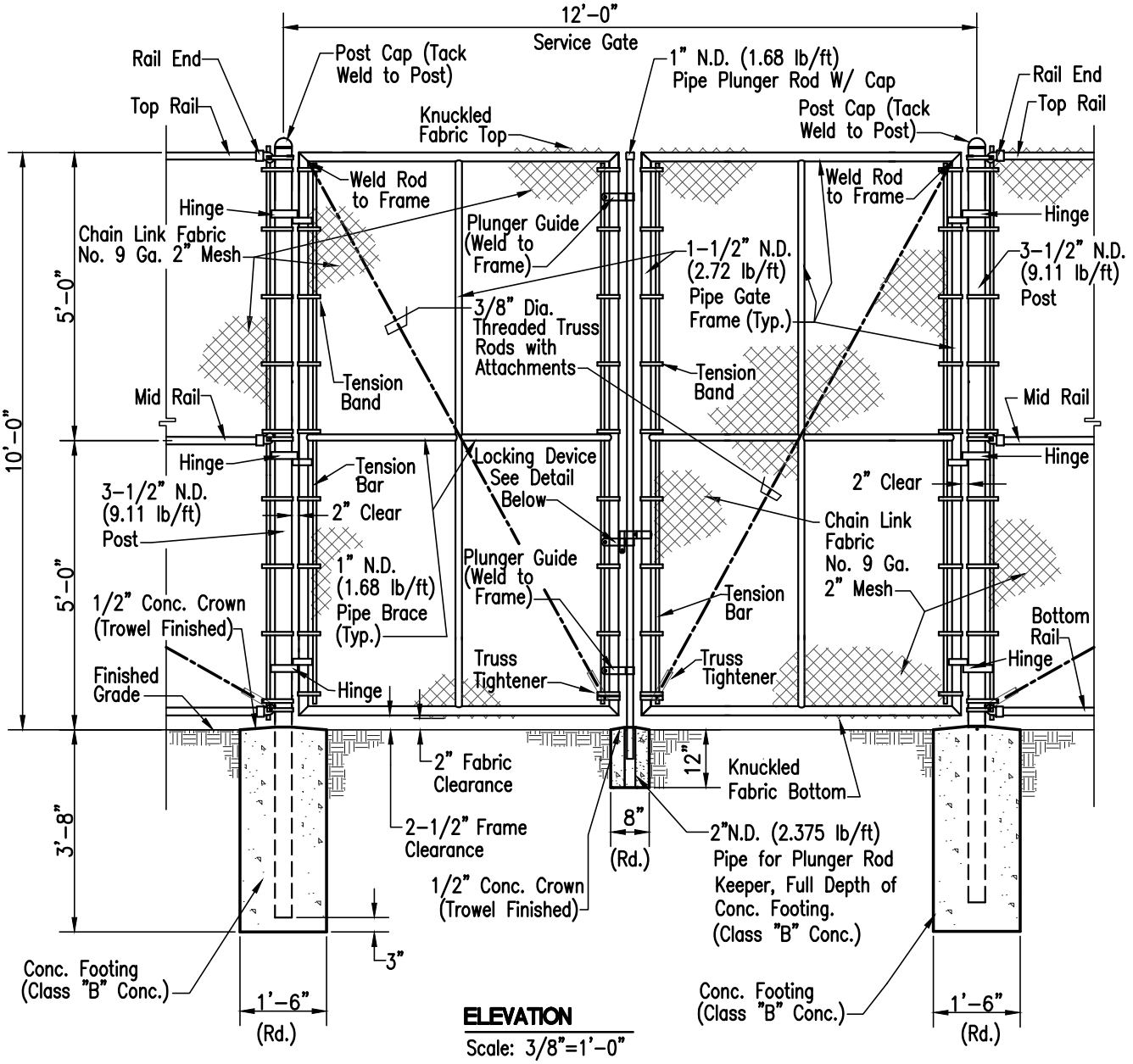

ELEVATION
Scale: 3/8"=1'-0"

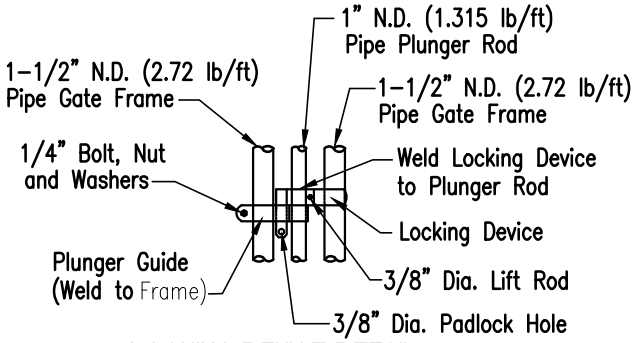

LOCKING DEVICE DETAIL
Scale: 1/2"=1'-0"

N O T E :

1. See Parks Std. Detail F-13 for Gate Construction Notes.

F-12(F)

F-12	STANDARD DETAILS	12'-0" SERVICE GATE DETAIL (10'-0" HIGH) SCALE: NOT TO SCALE REVISED: APRIL 2003	CITY COUNTY OF HONOLULU