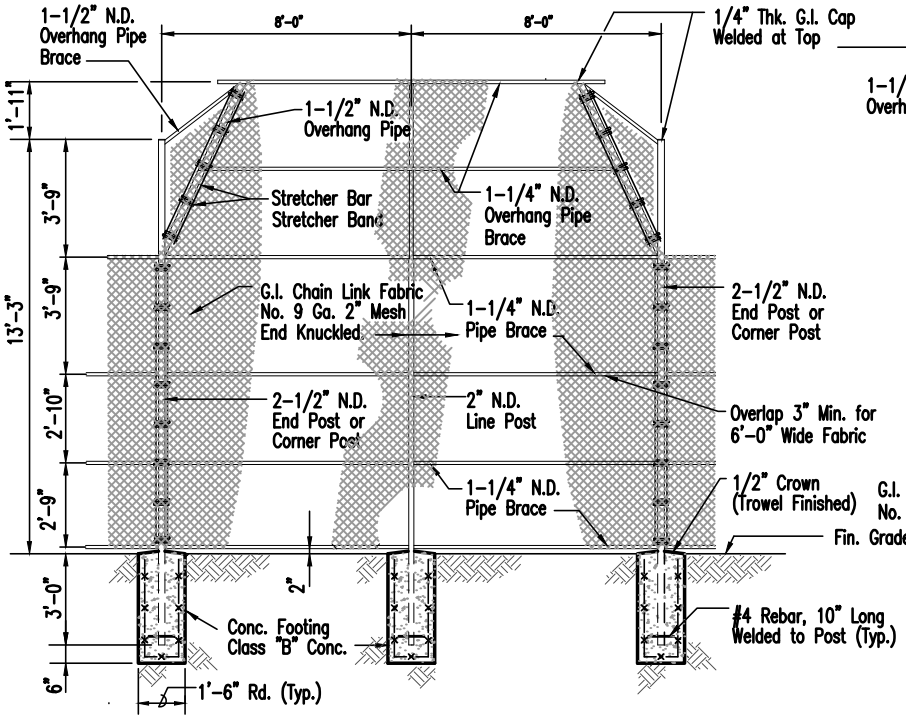

SOFTBALL BACKSTOP –TYPE "B"

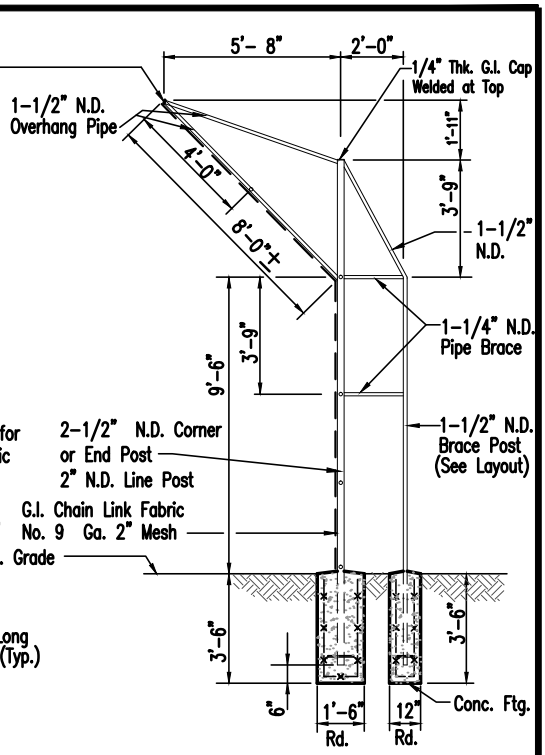

SECTION

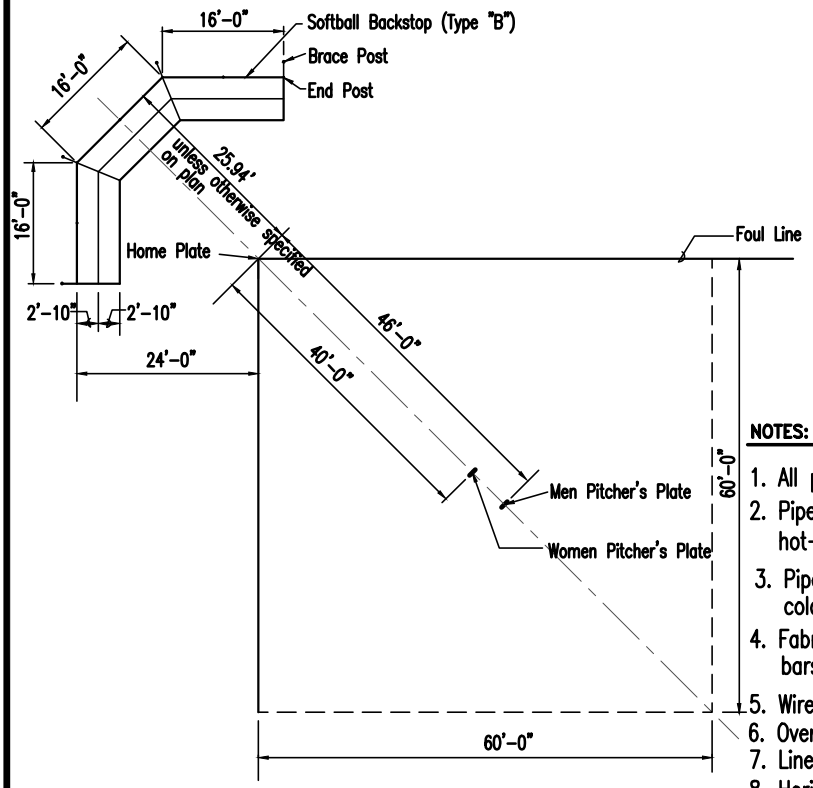

SOFTBALL DIAMOND LAYOUT

Size of pipe:	Weight per foot (lbs.):
1-1/4"	2.27
1-1/2"	2.72
2"	3.65
2-1/2"	5.79

NOTES:

1. All pipe and post sizes are nominal diameter (N.D.)
2. Pipes, posts, stretcher bars, bands, fabrics, etc. shall be hot-dip galvanized.
3. Pipe connections shall be welded and painted with Z.R.C. cold galvanizing compound.
4. Fabric shall be fastened to end and corner posts by stretcher bars and tension bands spaced approximately 15" apart.
5. Wire fastenings shall be No. 12 gauge galvanized tie wire.
6. Overhang wire fastenings shall be spaced 12" apart.
7. Line post wire fastenings shall be spaced 14" apart.
8. Horizontal brace wire fastenings shall be spaced 18" apart.
9. Home plate and pitcher's plate not in contract.
10. No splicing shall be allowed on all straight-run pipes.

CITY COUNTY OF HONOLULU	SOFTBALL DIAMOND LAYOUT W/ BACKSTOP - (TYPE "B")	STANDARD DETAILS	B-5
	SCALE: NOT TO SCALE REVISED: AUG. 1993		