WATER SYSTEM STANDARDS

DEPARTMENT OF WATER SUPPLY
COUNTY OF HAWAII

BOARD OF WATER SUPPLY
CITY AND COUNTY OF HONOLULU

DEPARTMENT OF WATER
COUNTY OF KAUAI

DEPARTMENT OF WATER SUPPLY
COUNTY OF MAUI

STATE OF HAWAII
2002

WATER SYSTEM STANDARDS

PLANNING

MATERIALS

CONSTRUCTION

APPROVED MATERIAL LIST AND STANDARD DETAILS

MILTON D. PAVAO
MANAGER
DEPARTMENT OF WATER SUPPLY
COUNTY OF HAWAII

ERNEST Y.W. LAU
MANAGER AND CHIEF ENGINEER
DEPARTMENT OF WATER
COUNTY OF KAUAI

CLIFFORD S. JAMILE
MANAGER AND CHIEF ENGINEER
BOARD OF WATER SUPPLY
CITY & COUNTY OF HONOLULU

DAVID CRADDICK
DIRECTOR
DEPARTMENT OF WATER SUPPLY
COUNTY OF MAUI

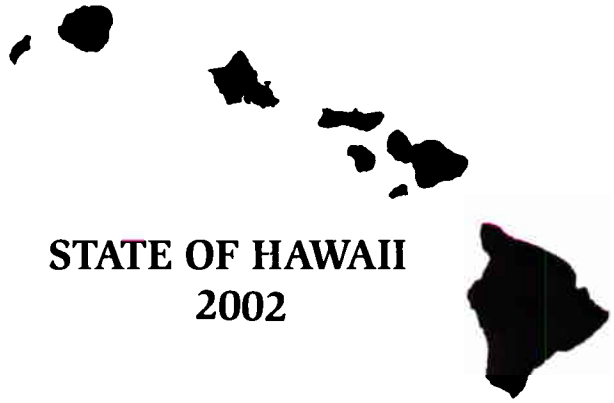

STATE OF HAWAII
2002

Amendments to the
2002 Water System Standards

Description	**WSS Section Modified**	**Approval Date**
Brass Products - Lead Free	Division 200, Section 211 Brass Products & Division 400, Section 402, Sub-section III Service Laterals, Fittings and Appurtenances	10/22/2013
Approved Material *Jensen Precast*	Division 400, Section 402, Sub-section III Service Laterals, Fittings and Appurtenances	1/4/2013
Rescinding Approval for Polyethylene (PE) Pipe	Division 200, Section 208 - Service Laterals and Appurtenances, 208.03 Plastic Tubing	12/14/2012
Brass Products	Division 200, Section 211 Brass Products & Division 400, Section 402, Sub-section III Service Laterals, Fittings and Appurtenances	6/5/2012
Approved Material *Armorcast*	Division 400, Section 402, Sub-section III Service Laterals, Fittings and Appurtenances	5/14/2012
Approved Material *Romac*	Division 400, Section 402 Sub-section I Pipes and Appurtenances	11/9/2011
Approved Material *IPEX*	Division 400, Section 402 Sub-section I Pipes and Appurtenances	9/14/2011
Rescinding Approval for Concrete Cylinder Pipe	Division 200, Section 203 Concrete Cylinder Pipe and Fittings	7/15/2011
Rescinding Approved Material *Royal Pipe Systems*	Division 400, Section 402 Sub-Section I Pipes and Appurtenances	4/29/2011
Approved Material *METCO*	Division 400, Section 402 Sub-section I Pipes and Appurtenances	11/4/2010
Approved Material *Advance products and Systems*	Division 400, Section 402 Sub-section I Pipes and Appurtenances	5/6/2010
Approved Material *Garlock*	Division 400, Section 402 Sub-section I Pipes and Appurtenances	1/19/2010
Approved Material *North American Pipe Corporation*	Division 400, Section 402 Sub-section I Pipes and Appurtenances	11/10/2009
Approved Material *Multi Fittings*	Division 400, Section 402 Sub-section I Pipes and Appurtenances	10/27/2009
Approved Material *Diamond Plastics*	Division 400, Section 402 Sub-section I Pipes and Appurtenances	8/14/2009
FM Meter & Box Standard Details	Division 400, Section 403 Standard Details	5/18/2009
Approved Material *Polytubes*	Division 400, Section 402, Subsection III Service Laterals, Fittings and Appurtenances	2/24/2009

Minimum Utility Depth	Division 100, Section 102 Mains, Sub-section 102.03 Cover & Division 400, Section 403 Standard Details	12/31/2008
Approved Material *American R/D*	Division 400, Section 402 Sub-section II Valves and Appurtenances	12/18/2008
Approved Material *Armorcast*	Division 400, Section 402, Sub-section III Service Laterals, Fittings and Appurtenances	12/4/2008 amended 5/18/2012
Distance between main valves	Division 100, Section 103 Sub-section 103.01 Location, Type, Working Pressure	10/21/2008
Nuts and bolts for flanged joints and fire hydrant break-off bolts	Division 200, Section 202.04 Flanged Joint and Section 206.1 General	3/18/2008
Approved Material *Sigma Corporation*	Division 400, Section 402 Sub-section I Pipes and Appurtenances	10/31/2007
Approved Material *Star Pipe Products, Inc.*	Division 400, Section 402 Sub-section I Pipes and Appurtenances	5/4/2007
Electronic Markers	New requirement	8/25/2006
Approved Material *Pratt & Lambert*	Division 400, Section 402 Sub-section V Paints and Coatings	1/27/2004
Cathodic protection	Division 500, Section 1.2 (Part 2), Table 3	10/15/2003
Approved Material *Tripac Fasteners & NSS Industries*	Division 400, Section 402 Sub-section I Pipes and Appurtenances	8/12/2003
Nuts and bolts for mechanical joints	Division 200, Section 202.02 Mechanical Joint	7/22/2003
Approved Material *Romac*	Division 400, Section 402 Sub-section I Pipes and Appurtenances	6/20/2003
Approved Material *Sherwin Williams*	Division 400, Section 402 Sub-section V Paints and Coatings	5/23/2003
Rescinded 4/29/2011 ~~Approved Material~~ ~~Royal Pipe Systems~~	Division 400, Section 402 Sub-section I Pipes and Appurtenances	5/19/2003
Approved Material *FSC Coatings*	Division 400, Section 402 Sub-section V Paints and Coatings	5/12/2003
Dis-approved Material *Powerseal*	Division 400, Section 402 Sub-section I Pipes and Appurtenances	3/24/2003
Approved Material *James Jones*	Division 400, Section 402 Sub-section III Service Laterals, Fittings and Appurtenances	11/27/2002
Approved Materials for Globe Valves	Division 400, Section 402 Sub-section II Valves and Appurtenances	11/22/2002
Approved Material *PPG Industries*	Division 400, Section 402 Sub-section V Paints and Coatings	7/11/2002

BOARD OF WATER SUPPLY

CITY AND COUNTY OF HONOLULU
630 SOUTH BERETANIA STREET
HONOLULU, HI 96843

October 22, 2013

KIRK CALDWELL, MAYOR

DUANE R. MIYASHIRO, Chairman
MAHEALANI CYPHER, Vice Chair
THERESIA C. McMURDO
ADAM C. WONG
DAVID C. HULIHEE

ROSS S. SASAMURA, Ex-Officio
GLENN M. OKIMOTO, Ex-Officio

ERNEST Y. W. LAU, P.E.
Manager and Chief Engineer

ELLEN E. KITAMURA, P.E.
Deputy Manager and Chief Engineer

TO: WHOM IT MAY CONCERN

FROM: ERNEST Y. W. LAU, P.E.
MANAGER AND CHIEF ENGINEER

SUBJECT: 2002 WATER SYSTEM STANDARDS AMENDMENTS

All waterworks brass fittings shall be in compliance with the amended Section 1417 of the Safe Drinking Water Act (SDWA) which takes effect on January 4, 2014. The amendment includes a change to the definition of "lead-free" by reducing lead content from 8% to a weighted average of not more than 0.25% in the wetted surface material. All waterworks brass fittings installed for potable water service on January 4, 2014 and beyond shall conform to the amended definition of "lead-free".

As indicated in Section 211 – Brass Products, all brass fitting shall conform to NSF Standard 61 and Section 1417 of the SDWA. In addition, for Oahu only, all brass fittings shall conform to NSF Standard 372. Until conforming brass products are approved for inclusion on the Approved Materials List, brass products must be submitted for review and approval on a project-to-project basis.

If you have any questions, please contact Michael Domion at (808)748-5740.

cc: Kauai, Maui and Hawaii Dept. of Water Supply

BOARD OF WATER SUPPLY

CITY AND COUNTY OF HONOLULU
630 SOUTH BERETANIA STREET
HONOLULU, HI 96843

January 4, 2013

KIRK W. CALDWELL, MAYOR

DUANE R. MIYASHIRO, Chairman
MAHEALANI CYPHER, Vice Chair
THERESIA C. McMURDO
ADAM C. WONG
KAULANA H. R. PARK

ROSS S. SASAMURA, Ex-Officio
GLENN M. OKIMOTO, Ex-Officio

ERNEST Y. W. LAU, P.E.
Manager and Chief Engineer

ELLEN E. KITAMURA, P.E.
Deputy Manager and Chief Engineer

Mr. Josh Bivens
Jensen Precast
1255 Nuuanu Avenue, Suite C104
Honolulu, Hawaii 96817

Dear Mr. Bivens:

Subject: Your Letter Dated October 24, 2012, Requesting Approval of Jensen Precast Meter Boxes

We approve the Jensen Precast Type A valve box and cover, Type B meter box and Type X meter box, for inclusion into the Water System Standards for Oahu only.

Please note that the standard cover for our Type B meter box shall be made of cast iron.

If you have any questions, please contact Michael Domion at 748-5740.

Very truly yours,

ERNEST Y. W. LAU, P.E.
Manager and Chief Engineer

cc: Kauai Department of Water Supply
Maui Department of Water Supply
Hawaii Department of Water Supply
M. Domion

EA:es

12-1287

BWS - ENGINEERING

2012 OCT 31 P 2:58 BOARD OF WATER SUPPLY ADMINISTRATION

2012 OCT 30 A 7:14

121287

mg
DLP
CP
cc: FO

JENSEN PRECAST
1255 Nuuanu Ave Suite C104
Honolulu, HI 96817
808-528-1175

Mr. Ernest Y.W. Lau
Manager and Chief Engineer
Board of Water Supply
630 South Beretania St
Honolulu, HI 96843

October 24, 2012

RE: Request for Product Approval

Dear Mr. Lau,

I am writing you to request the Board of Water Supply's approval of Jensen Precast Meter Boxes. We have recently taken over precast concrete operations for Ameron. The products we are producing will be the same that Ameron was approved to make for the Board of Water Supply. Jensen Precast is an NPCA Certified material supplier, with our production plant in the Campbell Industrial Park in Kapolei, HI. We would like approval to build the following Board of Water Supply Products:

1. Board of Water Standard Detail V13 – Type A Meter Box
2. Board of Water Standard Detail M1 – Type B Meter Box
3. Board of Water Standard Detail M3 – Type X Meter Box

Please see the enclosed shop drawings for your consideration. If I can answer any questions or be of any assistance please don't hesitate to contact me. We appreciate your consideration to become an approved supplier and look forward to hearing from you.

Sincerely,

Josh Bivens
Product Applications Specialist
808-321-4665
jbivens@jensenprecast.com

TYPE "A" VALVE BOX & CONCRETE COVER

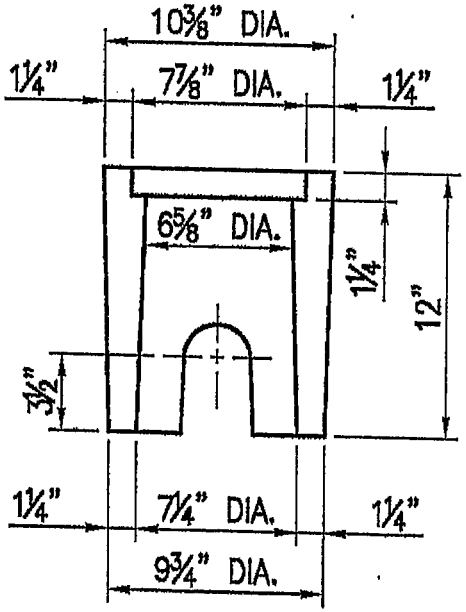

SECTION OF BOX

WEIGHT: = 16.0 lbs.

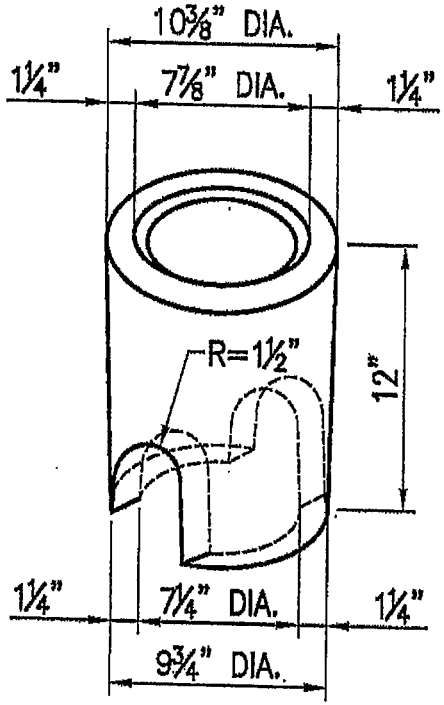

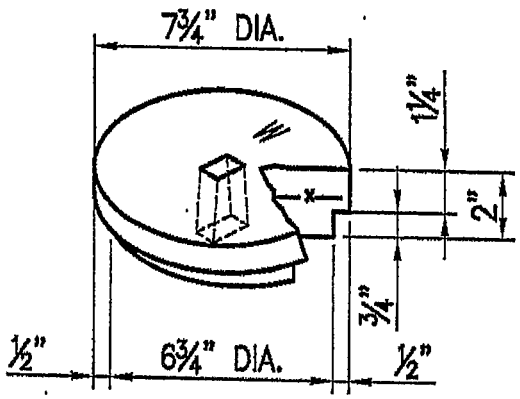

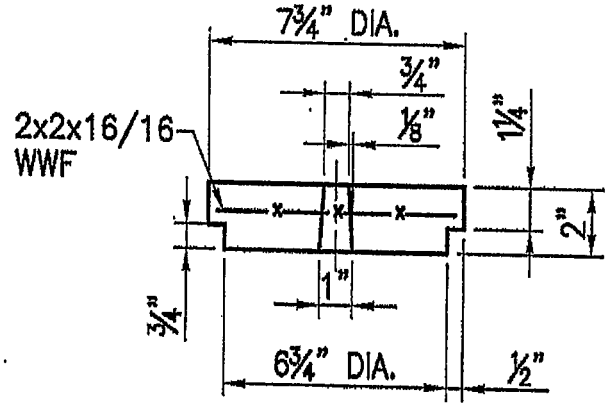

SECTION OF COVER

WEIGHT: = 6.6 lbs.

NOTES:

1. NON-REINFORCED
2. ACCOMMODATES 1", 1¼" & 1½" VALVES.
3. PRODUCT NUMBER: BOX P2010, COVER P2011.

JENSEN PRECAST

TYPE "B" METER BOX & CONCRETE COVER

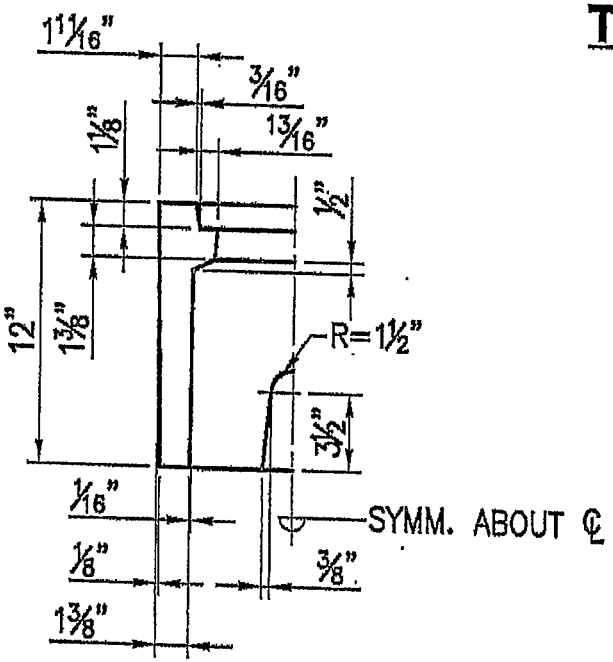

SECTION "A"

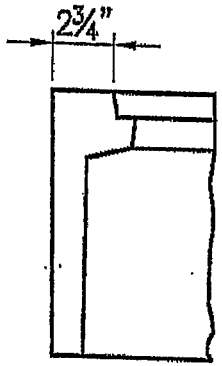

SECTION "A"

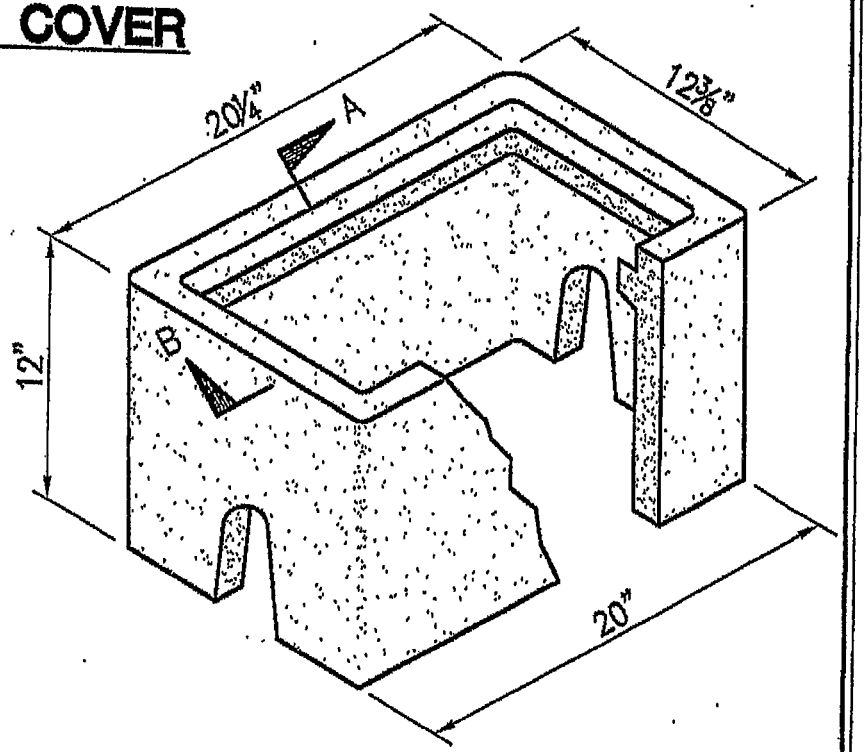

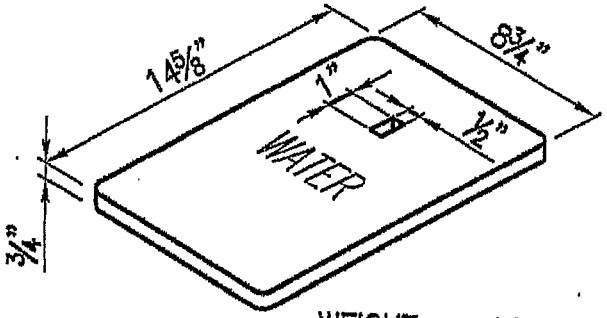

WEIGHT: = 14.2 lbs.

NOTES:

1. ACCOMMODATES 5/8" & 3/4" METERS.
2. SYNTHETIC FIBER REINFORCEMENT IN BOX AND COVER.
3. TYPE B VALVE BOX PRODUCT NO. P2012.
4. CONCRETE COVER, PRODUCT NO. 2013. TYPE B CAST IRON COVER, D&L MODEL NO. L-2440.
5. THIS COVER IS AVAILABLE WITH THE FOLLOWING BRANDS ON SPECIAL ORDERS; HTC, BWS HILO, GAS CO., GAS VALVE, TV, ELEC., TRAFFIC SIGNALS, CATV AND CO.

JENSEN PRECAST

TYPE "X" METER BOX
WT. = 107 LBS.

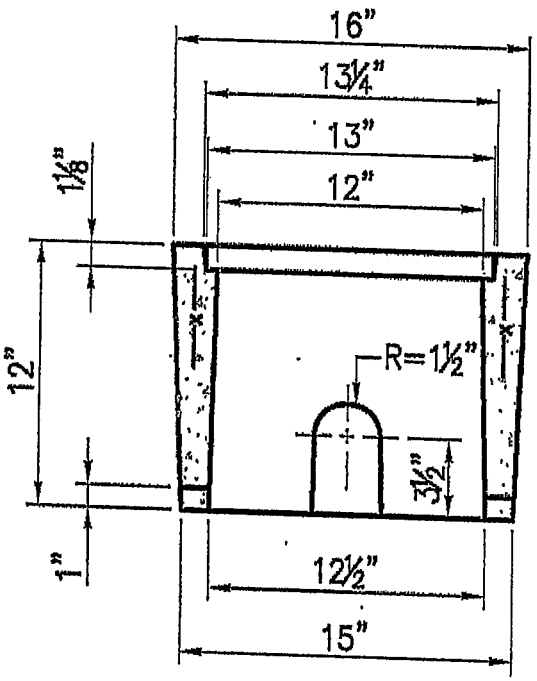

WEIGHT: = 107 lbs.

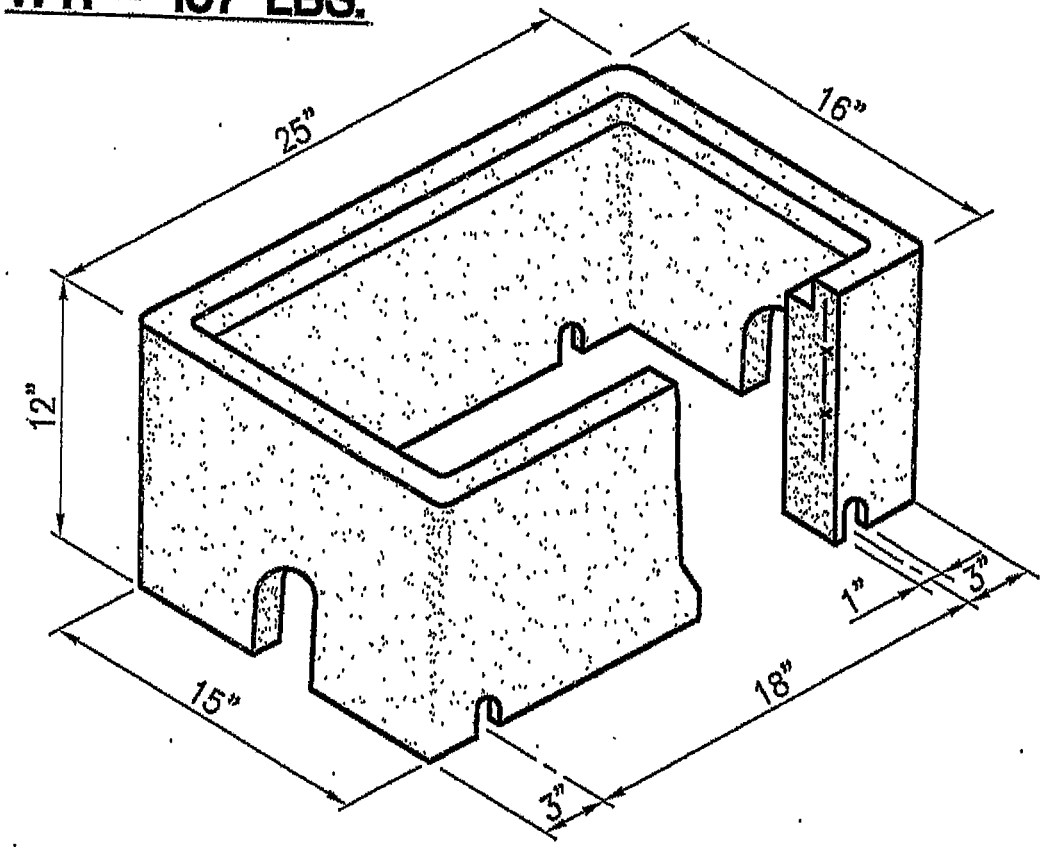

NOTES:

1. TYPE "X" METER BOX FOR ⅝", ¾", AND 1" METERS.
2. FOR "HAWAII", TYPE "X" METER BOX IS FOR 1" METER ONLY.
3. CAST IRON COVER WITH CAST IRON READING COVER, D&L NO. L-2450.
4. REINFORCED WITH 2" x 2" – 16/16 GA. WELDED WIRE MESH AND SYNTHETIC FIBER REINFORCEMENT.

JENSEN PRECAST

BOARD OF WATER SUPPLY

CITY AND COUNTY OF HONOLULU
630 SOUTH BERETANIA STREET
HONOLULU, HI 96843

December 14, 2012

PETER B. CARLISLE, MAYOR

DUANE R. MIYASHIRO, Chairman
MAHEALANI CYPHER, Vice Chair
THERESIA C. McMURDO
ADAM C. WONG
KAULANA H. R. PARK

KENNETH A. SHIMIZU, Ex-Officio
GLENN M. OKIMOTO, Ex-Officio

ERNEST Y. W. LAU, P.E.
Manager and Chief Engineer

ELLEN E. KITAMURA, P.E.
Deputy Manager and Chief Engineer

TO: WHOM IT MAY CONCERN

FROM: ERNEST Y. W. LAU, P.E.
MANAGER AND CHIEF ENGINEER

SUBJECT: AMENDMENT TO THE WATER SYSTEM STANDARDS DATED 2002 FOR POLYETHYLENE (PE) PIPE FOR OAHU ONLY

Effective immediately, the Honolulu Board of Water Supply (BWS) rescinds approval of the incorporation of PE pipe into the municipal water system for the island of **Oahu only**. All service laterals and service connections 2-1/2 inches and smaller shall be copper pipe only unless otherwise approved by the BWS.

If you have any questions, please contact Michael Domion at (808)748-5740.

cc: Kauai Department of Water Supply
Maui Department of Water Supply
Hawaii Department of Water Supply

BOARD OF WATER SUPPLY

CITY AND COUNTY OF HONOLULU
630 SOUTH BERETANIA STREET
HONOLULU, HI 96843

PETER B. CARLISLE, MAYOR

RANDALL Y. S. CHUNG, Chairman
MAHEALANI CYPHER, Vice Chair
THERESIA C. McMURDO
DUANE R. MIYASHIRO
ADAM C. WONG

WESTLEY K.C. CHUN, Ex-Officio
GLENN M. OKIMOTO, Ex-Officio

ERNEST Y. W. LAU, P.E.
Manager and Chief Engineer

ELLEN E. HIRAYAMA, P.E.
Deputy Manager and Chief Engineer

June 5, 2012

TO: WHOM IT MAY CONCERN

FROM: ERNEST Y. W. LAU, P.E.
MANAGER AND CHIEF ENGINEER

SUBJECT: MODIFICATIONS TO NSF STANDARD 61 AFFECTING MATERIALS APPROVALS FOR BRASS PRODUCTS FOR OAHU ONLY

Effective July 1, 2012, the requirements of NSF Standard 61 Annex F reduce the allowable limit for lead extracted from test bodies from 15 parts per billion (ppb) to 5 ppb. As all waterworks brass fittings must conform to NSF Standard 61 in accordance with Section 211 – Brass Products of the Water System Standards, all materials approvals for brass fittings will be rescinded upon the Annex F effective date for Oahu only, unless certification is provided that products are in conformance with the updated NSF Standard.

Construction projects that have received approval for their brass product materials submittals prior to July 1, 2012 shall not be affected. Until conforming brass products are approved for inclusion on the Approved Materials List, brass products must be submitted for review and approval on a project-to-project basis.

If you have any questions, please contact Michael Domion at (808)748-5740.

cc: Kauai Department of Water Supply
Maui Department of Water Supply
Hawaii Department of Water Supply

BOARD OF WATER SUPPLY

CITY AND COUNTY OF HONOLULU
630 SOUTH BERETANIA STREET
HONOLULU, HI 96843

May 14, 2012

PETER B. CARLISLE, MAYOR

RANDALL Y. S. CHUNG, Chairman
MAHEALANI CYPHER, Vice Chair
THERESIA C. McMURDO
DUANE R. MIYASHIRO
ADAM C. WONG

WESTLEY K.C. CHUN, Ex-Officio
GLENN M. OKIMOTO, Ex-Officio

ERNEST Y. W. LAU, P.E.
Manager and Chief Engineer

ELLEN E. HIRAYAMA, P.E.
Deputy Manager and Chief Engineer

Mr. Wally Sunnaa, P.E.
Armorcast Products Company
13230 Saticoy Street
North Hollywood, California 91605

Dear Mr. Sunnaa,

Subject: Your Letter Dated November 18, 2011 Regarding Product Approval Request for Polymer Concrete Type "A" Valve Box

We approve the Armorcast Polymer Concrete Type "A" Valve Box (drawing no. A6000712TA) for inclusion into the Water System Standards for Oahu only.

If you have any questions, please contact Michael Domion at (808)748-5740.

Very truly yours,

ERNEST Y. W. LAU, P.E.
Manager and Chief Engineer

Enclosure

cc: Kauai Department of Water Supply
Maui Department of Water Supply
Hawaii Department of Water Supply

APPROX. BOX WT. = 18 LBS.
APPROX. COVER WT. = 8 LBS.

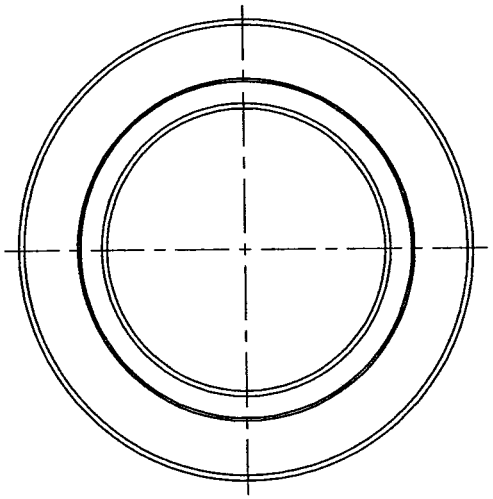

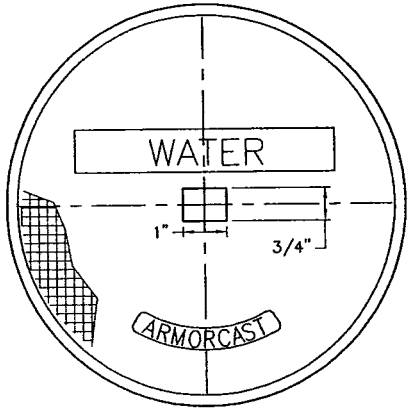

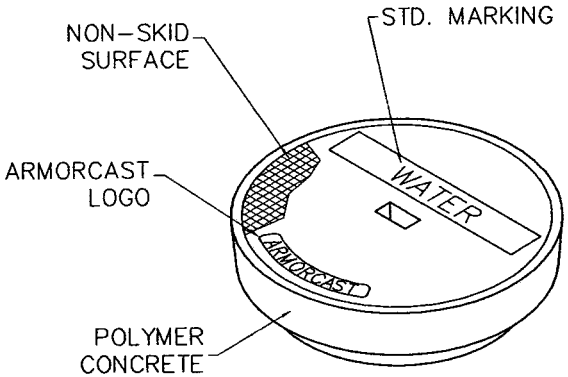

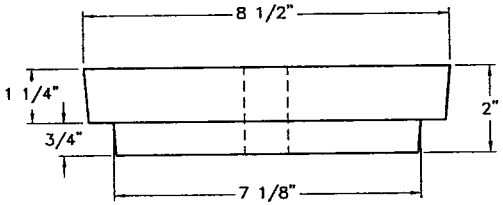

POLYMER CONCRETE COVER
A6000713

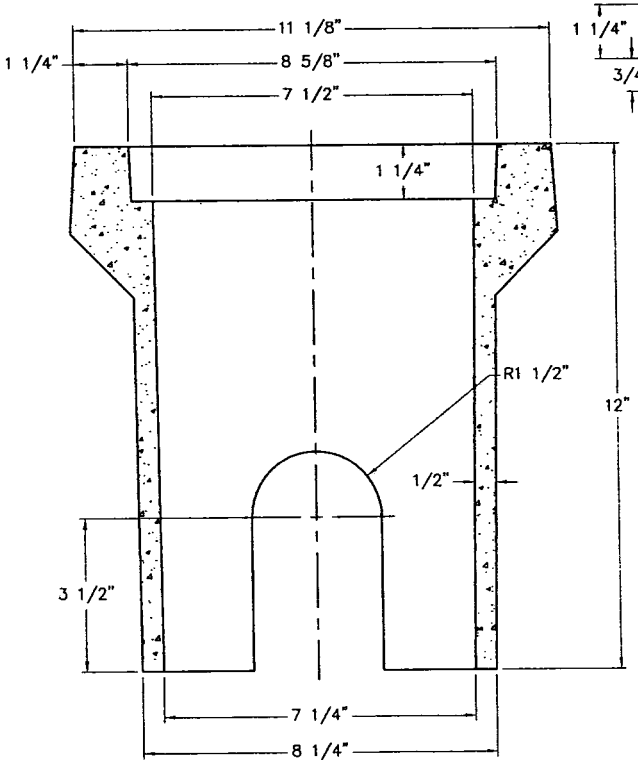

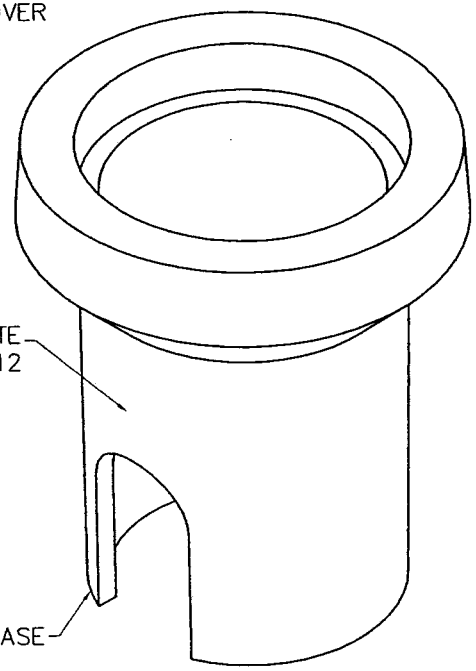

TYPE "A" VALVE BOX

FILE NAME A6000712TA

13230 Satiacy Street, North Hollywood, CA 91605 (818) 982-3600 ARMORCAST® PRODUCTS COMPANY	PART DESCRIPTION ø7" X 12" POLYMER CONCRETE TYPE A VALVE BOX			
	CUSTOMER OAHU BOARD OF WATER SUPPLY			
"THE INFORMATION IN THIS DRAWING IS CONFIDENTIAL. THE DRAWING IS NOT TO BE REPRODUCED OR ITS CONTENTS DIVULGED IN ANY WAY WHATSOEVER EXCEPT WITH THE PRIOR WRITTEN APPROVAL OF ARMORCAST PRODUCTS COMPANY. IT IS THE PROPERTY OF AND MUST BE RETURNED TO ARMORCAST PRODUCTS COMPANY, 13230 SATICOY STREET, NORTH HOLLYWOOD, CALIFORNIA 91605."	DRAWN OA	DATE 12/11	SCALE NONE	MAX. LOAD 20K
	APPROV. WS	12/11	MATERIAL POLYMER CONCRETE	DRAWING NUMBER A6000712TA

BOARD OF WATER SUPPLY

CITY AND COUNTY OF HONOLULU
630 SOUTH BERETANIA STREET
HONOLULU, HI 96843

PETER B. CARLISLE, MAYOR

RANDALL Y. S. CHUNG, Chairman
DENISE M. C. DE COSTA, Vice Chair
THERESIA C. McMURDO
DUANE R. MIYASHIRO
ADAM C. WONG

WESTLEY K.C. CHUN, Ex-Officio
GLENN M. OKIMOTO, Ex-Officio

DEAN A. NAKANO
Acting Manager

November 9, 2011

Mr. John Nelson, Area Manager
Romac Industries, Inc.
21919 20th Avenue, SE, Suite 100
Bothell, Washington 98021

Dear Mr. Nelson:

Subject: Your Letter Dated May 6, 2011 Requesting Approval of Romac Style Macro Extended Range Coupling

We approve the Romac Macro Extended Range Coupling for inclusion into the Water System Standards for Oahu only.

If you have any questions, please contact Michael Domion at (808)748-5740.

Sincerely,

DEAN A. NAKANO
Acting Manager

cc: Maui, Kauai, and Hawaii Department of Water Supply

E-10/2011

ROMAC INDUSTRIES, INC.

21919 20th Avenue SE • Suite 100
Bothell, WA 98021

May 6, 2011

Jason H. Takaki, P.E.
Civil Engineer, Capital Projects Division
Honolulu Board of Water Supply
630 South Beretania Street
Honolulu, Hawaii 96843

Dear Mr. Takaki:

Romac Industries, Inc. would like to submit for approval the following items to be added to the approved material list for the Board of Water Supply.

Romac Style Macro Extended Range Coupling

Product Submittal:
(Enclosed)

The Macro is an Extended Range Coupling for multipurpose use, having a range from steel pipe through class 200 asbestos cement pipe.

Samples of this product have been sent to Operations, attention Daryl Hiromoto, for evaluation.

Please call me if you require additional information or have any further questions. Thank you for taking the time to consider our product for approval.

Sincerely Yours,

John Nelson
Area Manager
Romac Industries, Inc.

c.c.
Daryl Hiromoto
Peter Schmidt

2011 MAY 11 A 7:24
BWS - ENGINEERING

BOARD OF WATER SUPPLY

CITY AND COUNTY OF HONOLULU
630 SOUTH BERETANIA STREET
HONOLULU, HI 96843

September 14, 2011

PETER B. CARLISLE, MAYOR

RANDALL Y. S. CHUNG, Chairman
DENISE M. C. DE COSTA, Vice Chair
THERESIA C. McMURDO
DUANE R. MIYASHIRO
ADAM C. WONG

WESTLEY K.C. CHUN, Ex-Officio
GLENN M. OKIMOTO, Ex-Officio

DEAN A. NAKANO
Acting Manager

Mr. Jon A. Franzmeier
Hawaii Irrigation Supply Company, Inc.
803 Mapunapuna Street
Honolulu, Hawaii 96819-2038

Dear Mr. Franzmeier:

Subject: Your Letter Dated June 30, 2011 Requesting Confirmation of Approval for IPEX DR18 and DR14 C-900 4-Inch Through 12-Inch PVC Pipe

We approve the IPEX Blue Brute, AWWA C900 PVC Pipes, DR18 and DR14, sizes 4-inch through 12-inch, for inclusion into the Water System Standards for Oahu only.

The approval is based on the original approval given to Johns-Manville PVC pipe, dated January 30, 1980.

The design and construction of the IPEX PVC pipes shall be as specified in our Water System Standards.

If you have any questions, please contact Michael Domion at 748-5740.

Sincerely,

DEAN A. NAKANO
Acting Manager

cc: Hawaii, Maui, and Kauai Water Departments

BOARD OF WATER SUPPLY

CITY AND COUNTY OF HONOLULU
630 SOUTH BERETANIA STREET
HONOLULU, HI 96843

July 15, 2011

PETER B. CARLISLE, MAYOR

RANDALL Y. S. CHUNG, Chairman
DENISE M. C. DE COSTA
ANTHONY R. GUERRERO, JR.
THERESIA C. McMURDO
ADAM C. WONG

WESTLEY K.C. CHUN, Ex-Officio
GLENN M. OKIMOTO, Ex-Officio

DEAN A. NAKANO
Acting Manager

TO: WHOM IT MAY CONCERN

FROM: DEAN A. NAKANO, ACTING MANAGER
BOARD OF WATER SUPPLY

SUBJECT: AMENDMENT TO THE WATER SYSTEM STANDARDS, DATED 2002, FOR CONCRETE CYLINDER PIPE AND FITTINGS

Effective immediately, the Honolulu Board of Water Supply herewith rescinds approval of the incorporation of concrete cylinder pipe (CCP) into the municipal water system for the island of Oahu only. Concrete cylinder fittings shall only be used for connections to existing CCP.

Historical data indicates CCP is not cost-effective based on expected service life. CCP is also difficult and time-consuming to repair.

If you have any questions, please contact Michael Domion at (808)748-5740.

BOARD OF WATER SUPPLY

CITY AND COUNTY OF HONOLULU
630 SOUTH BERETANIA STREET
HONOLULU, HI 96843

April 29, 2011

PETER B. CARLISLE, MAYOR

RANDALL Y. S. CHUNG, Chairman
DENISE M. C. DE COSTA
ANTHONY R. GUERRERO, JR.
THERESIA C. McMURDO
ADAM C. WONG

WESTLEY K.C. CHUN, Ex-Officio
GLENN M. OKIMOTO, Ex-Officio

WAYNE M. HASHIRO, P.E.
Manager and Chief Engineer

DEAN A. NAKANO
Deputy Manager

Royal Pipe Systems
131 Regalcrest Court
Woodbridge, ON, Canada
L4L 8P3

Gentlemen:

Subject: Rescinding Approvals for Royal Pipe Systems PVC Pressure Pipe

Effective immediately, the Honolulu Board of Water Supply (BWS) herewith rescinds approval letters dated December 14, 2001 and May 19, 2003, for Royal Pipe System PVC pressure pipes for use on the island of Oahu.

The BWS experienced premature failure of a 12-inch PVC pipe installed in 2003. The PVC main shattered, causing extensive damage to the roadway, property damage, interruption of business and heavy traffic conditions. We could not determine the cause of the failure, and approximately 17 feet of main was needed to repair the break. The rescinding of your approvals is a precautionary measure as we further investigate the cause of the break.

If you have any questions, please contact Michael Domion at (808) 748-5740.

Sincerely,

DEAN A. NAKANO
Acting Manager

Enclosures

cc: Kauai, Maui, Hawaii Water Departments

BOARD OF WATER SUPPLY

CITY AND COUNTY OF HONOLULU
630 SOUTH BERETANIA STREET
HONOLULU, HI 96843

November 4, 2010

PETER B. CARLISLE, MAYOR

RANDALL Y. S. CHUNG, Chairman
ANTHONY R. GUERRERO, JR.
WILLIAM K. MAHOE
THERESIA C. McMURDO
ADAM C. WONG

GEORGE "KEOKI" MIYAMOTO, Ex-Officio
MICHAEL D. FORMBY, Ex-Officio

WAYNE M. HASHIRO, P.E.
Manager and Chief Engineer

DEAN A. NAKANO
Deputy Manager

Mr. Gary Kong
Delco Sales
111 Sand Island Access Road, Unit I-10
Honolulu, Hawaii 96819

Dear Mr. Kong:

Subject: Your Letter Dated July 29, 2010, Requesting Approval of Fluor O Kote #1 Fasteners

We approve the METCO Fluor O Kote #1 Blue Bolts for inclusion into the Water System Standards for Oahu only, for mechanical joint installations.

If you have any questions, please contact Michael Domion at 748-5740.

Me ka mahalo pumehana,

WAYNE M. HASHIRO, P.E.
Manager and Chief Engineer

cc: Maui, Kauai, and Hawaii Department of Water Supply

NOV 0 2010

BOARD OF WATER SUPPLY

CITY AND COUNTY OF HONOLULU
630 SOUTH BERETANIA STREET
HONOLULU, HI 96843

May 6, 2010

MUFI HANNEMANN, Mayor

RANDALL Y. S. CHUNG, Chairman
SAMUEL T. HATA
WILLIAM K. MAHOE
THERESIA C. McMURDO
ADAM C. WONG

JEOFFREY S. CUDIAMAT, Ex-Officio
BRENNON T. MORIOKA, Ex-Officio

WAYNE M. HASHIRO, P.E.
Manager and Chief Engineer

DEAN A. NAKANO
Deputy Manager

Mr. Gary Kong
Delco Sales
111 Sand Island Access Road, Unit I-10
Honolulu, Hawaii 96819

Dear Mr. Kong:

Subject: Your Letter Dated September 29, 2009, Requesting Approval of Advance Products and Systems Full-Face Trojan Nitrile Gasket

We approve the Advance Products and Systems Full-Face Trojan Nitrile Gasket for inclusion into the Water System Standards for Oahu only.

If you have any questions, please contact Michael Domion at 748-5740.

Sincerely,

WAYNE M. HASHIRO, P.E.
Manager and Chief Engineer

cc: Maui, Kauai, and Hawaii Department of Water Supply

BOARD OF WATER SUPPLY

CITY AND COUNTY OF HONOLULU
630 SOUTH BERETANIA STREET
HONOLULU, HI 96843

MUFI HANNEMANN, Mayor

RANDALL Y. S. CHUNG, Chairman
SAMUEL T. HATA
ALLY J. PARK
ROBERT K. CUNDIFF
WILLIAM K. MAHOE

JEOFFREY S. CUDIAMAT, Ex-Officio
BRENNON T. MORIOKA, Ex-Officio

WAYNE M. HASHIRO, P.E.
Manager and Chief Engineer

DEAN A. NAKANO
Deputy Manager and Chief Engineer

January 19, 2010

Mr. Rich Varalla
V.P. Sales & Marketing
Tripac Fasteners, A Division of Tripac Marketing, Inc.
475 Klug Circle
Corona, California 92880-5406

Dear Mr. Varalla:

Subject: Your Letter Dated May 20, 2009, Regarding Approval of
Garlock/Tripac Style 5000 Compressed Non-Asbestos Gasket

We approve the Garlock/Tripac Style 5000 gaskets for inclusion into our Water System Standards.

If you have any questions, please contact Michael Domion at (808)748-5740.

Sincerely,

Wayne M. Hashiro

WAYNE M. HASHIRO, P.E.
Manager and Chief Engineer

cc: Maui, Kauai, and Hawaii Department of Water Supply

JAN 15 2010

BOARD OF WATER SUPPLY

CITY AND COUNTY OF HONOLULU
630 SOUTH BERETANIA STREET
HONOLULU, HI 96843

MUFI HANNEMANN, Mayor

RANDALL Y. S. CHUNG, Chairman
SAMUEL T. HATA
ALLY J. PARK
ROBERT K. CUNDIFF
WILLIAM K. MAHOE

JEOFFREY S. CUDIAMAT, Ex-Officio
BRENNON T. MORIOKA, Ex-Officio

WAYNE M. HASHIRO, P.E.
Manager and Chief Engineer

DEAN A. NAKANO
Deputy Manager and Chief Engineer

November 10, 2009

Mr. Gary Kong
Delco Sales
111 Sand Island Access Road I-10
Honolulu, Hawaii 96819

Mr. Kong:

Subject: Your Letter Dated June 25, 2009 Requesting Inclusion of North American Pipe Corporation's PVC Pipes into the Approved Materials List for Oahu Only

We grant approvals as follows for the inclusion of North American Pipe Corporation's PVC pipes in the Water System Standards (WSS) Approved Materials List for Oahu only:

PVC C-900 Pipe

Dimension Ratio (DR)	Nominal Pipe Size	
14	4-inch	Approved
14	6-inch	Approved
14	8-inch	Approved
14	10-inch	Not approved
14	12-inch	Approved
18	4-inch	Approved
18	6-inch	Approved
18	8-inch	Approved
18	10-inch	Not approved
18	12-inch	Approved

Note: The 10-inch diameter PVC pipe is not a standard size specified in the WSS and is not approved for use.

PVC Schedule 40 Pipe is not included in the WSS Approved Materials List. Schedule 40 PVC pipe must meet the material specifications for irrigation pressure lines per Division 300, Section 307.02.C.2 and is considered for use on a job-to-job basis only.

NOV 10 2009

PVC C-905 Pipe

Dimension Ratio (DR)	Nominal Pipe Size	
18	14-inch	Not approved
18	16-inch	Approved
18	18-inch	Not approved
18	20-inch	Approved
18	24-inch	Approved

Note: The 14-inch diameter PVC pipe is not a standard size specified in the WSS and is not approved for use. The 18-inch diameter PVC pipe size is also not approved for use on Oahu in accordance with the WSS.

If you have any questions, please contact Michael Domion at 748-5740.

Sincerely,

WAYNE M. HASHIRO, P.E.
Manager and Chief Engineer

BOARD OF WATER SUPPLY

CITY AND COUNTY OF HONOLULU
630 SOUTH BERETANIA STREET
HONOLULU, HI 96843

MUFI HANNEMANN, Mayor

RANDALL Y. S. CHUNG, Chairman
SAMUEL T. HATA
ALLY J. PARK
ROBERT K. CUNDIFF
WILLIAM K. MAHOE

JEOFFREY S. CUDIAMAT, Ex-Officio
BRENNON T. MORIOKA, Ex-Officio

WAYNE M. HASHIRO, P.E.
Manager and Chief Engineer

DEAN A. NAKANO
Deputy Manager and Chief Engineer

October 27, 2009

Mr. Gary Kong
Delco Sales
111 Sand Island Access Road, I-10
Honolulu, Hawaii 96819

Dear Mr. Kong:

Subject: Your Letter Dated June 25, 2009 Requesting Approval of Delco Multi Fittings

We approve the Blue Brute pressure fittings in sizes from 4-Inch to 8-Inch conforming to AWWA C907 for inclusion into our Water System Standards (WSS) for Oahu only.

We deny approval of the CycleTough IPS Pressure Fittings. The product does not conform to AWWA C907 as required by the WSS.

If you have any questions, please contact Michael Domion at 748-5740.

Sincerely,

Wayne M. Hashiro

WAYNE M. HASHIRO, P.E.
Manager and Chief Engineer

cc: Maui, Kauai and Hawaii Department of Water Supply

OCT 2009

BOARD OF WATER SUPPLY

CITY AND COUNTY OF HONOLULU
630 SOUTH BERETANIA STREET
HONOLULU, HI 96843

MUFI HANNEMANN, Mayor

RANDALL Y. S. CHUNG, Chairman
SAMUEL T. HATA
ALLY J. PARK
ROBERT K. CUNDIFF
WILLIAM K. MAHOE

JEOFFREY S. CUDIAMAT, Ex-Officio
BRENNON T. MORIOKA, Ex-Officio

WAYNE M. HASHIRO, P.E.
Manager and Chief Engineer

DEAN A. NAKANO
Deputy Manager and Chief Engineer

August 14, 2009

Mr. Mark Wright
Diamond Plastics Corporation
1212 Johnstown Road
P. O. Box 1608
Grand Island, Nebraska 68802-1608

Dear Mr. Wright:

Subject: Your Letter Dated June 27, 2008 and Follow-up Facsimile Dated March 24, 2009, Requesting Inclusion of Diamond Plastics PVC Pipes Into the Approved Material List for Oahu Only

We approve the Diamond Plastics PVC pipes for the following classes, dimension ratios (DR) and sizes, for inclusion in our Water System Standards (WSS) for Oahu only:

Class	Dimension Ratio (DR)	Size
C900	14	4", 6", 8" and 12"
C900	18	4", 6", 8" and 12"
C905	18	16", 18", 20" and 24"

We do not use 10-inch and 14-inch nominal pipe sizes and these sizes are not approved for inclusion in our Water System Standards.

The 16-inch DR14 PVC pipe does not conform to our standards (Division 200, Section 204.01.C); therefore, will not be approved for inclusion in our standards under Division 400, Section 402.I.E – Approved Material List. However, we will consider the use of the 16-inch DR14 PVC pipe in our water system on a case-by-case basis.

We deny approval of the Diamond Lok-21 restrained joint C900 PVC pipes. Restrained joint is not permitted in our water system.

If you have any questions, please contact Michael Domion at (808)748-5740.

Sincerely,

WAYNE M. HASHIRO, P.E.
Manager and Chief Engineer

cc: Maui, Kauai, and Hawaii Department of Water Supply

AUG 1 4 '09

BOARD OF WATER SUPPLY

CITY AND COUNTY OF HONOLULU
630 SOUTH BERETANIA STREET
HONOLULU, HI 96843

May 18, 2009

MUFI HANNEMANN, Mayor

RANDALL Y. S. CHUNG, Chairman
SAMUEL T. HATA
ALLY J. PARK
ROBERT K. CUNDIFF
WILLIAM K. MAHOE

JEOFFREY S. CUDIAMAT, Ex-Officio
BRENNON T. MORIOKA, Ex-Officio

WAYNE M. HASHIRO, P.E.
Manager and Chief Engineer

DEAN A. NAKANO
Deputy Manager and Chief Engineer

TO: WHOM IT MAY CONCERN

FROM: WAYNE M. HASHIRO, P.E.
MANAGER AND CHIEF ENGINEER

SUBJECT: 2002 WATER SYSTEM STANDARDS AMENDMENTS

The following amendment to the 2002 Water System Standards is effective immediately for **OAHU ONLY:**

DIVISION 400, SECTION 403 STANDARD DETAILS:

Replace the following details with the enclosed details (2009 Revision):

Standard Detail	Description
M34	8" x 2" FM Meter & Box Layout Fire and Domestic Uses – CMU Walls
M35	8" x 2" FM Meter & Box Layout Fire and Domestic Uses – CMU Walls
M37	8" x 2" FM Meter & Box Layout Fire and Domestic Uses – Precast/Cast-In-Place Walls
M38	8" x 2" FM Meter & Box Layout Fire and Domestic Uses – Precast/Cast-In-Place Walls

The manhole rungs in the FM meter box have been relocated to the outlet side of the meter to improve access for maintenance by Board of Water Supply personnel. The sump will be located on the opposite side due to the relocation of the manhole rungs.

If you have any questions, please contact Michael Domion at 748-5740.

Enclosures

cc: Kauai, Maui, Hawaii Water Departments

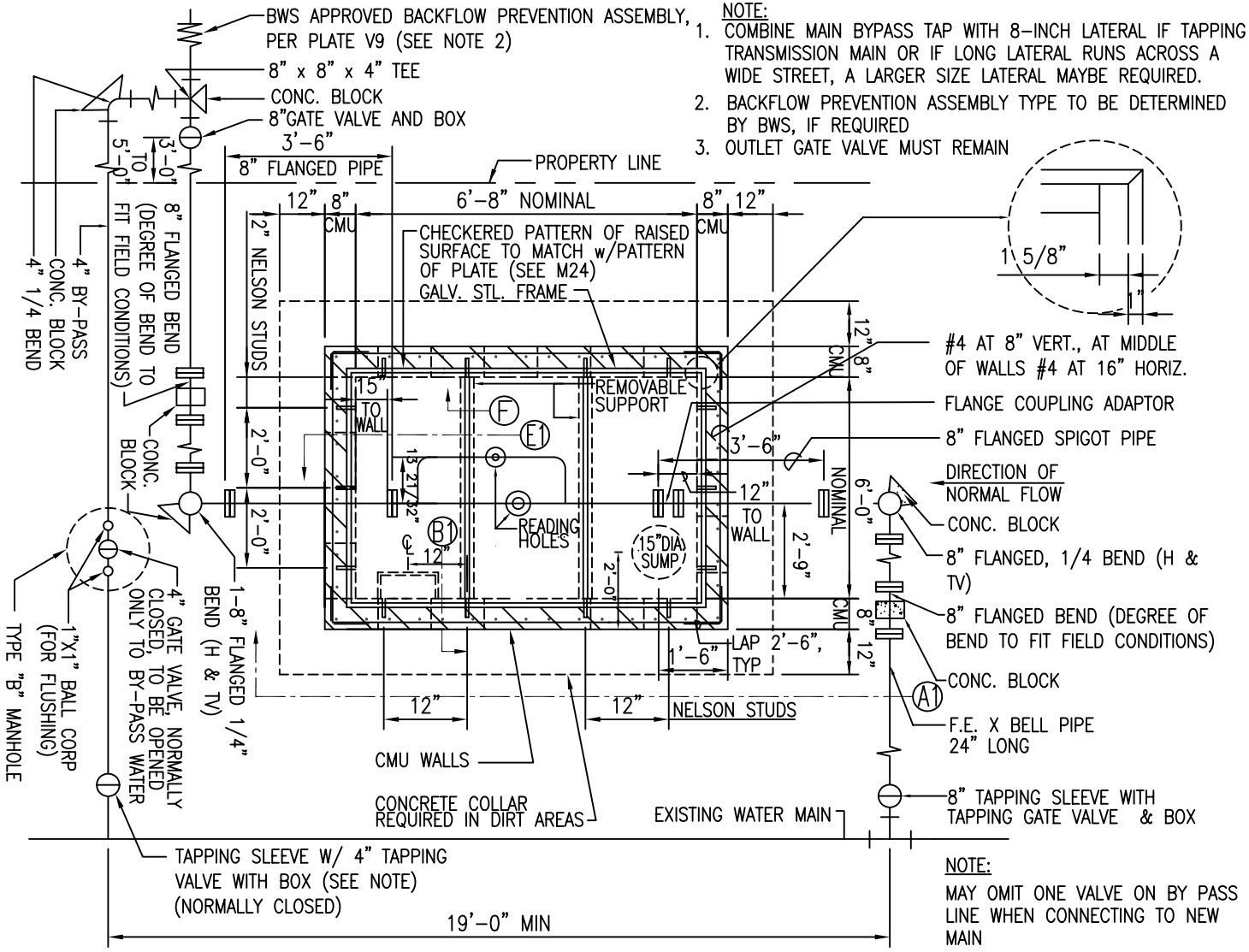

NOTE:
1. COMBINE MAIN BYPASS TAP WITH 8-INCH LATERAL IF TAPPING TRANSMISSION MAIN OR IF LONG LATERAL RUNS ACROSS A WIDE STREET, A LARGER SIZE LATERAL MAYBE REQUIRED.
2. BACKFLOW PREVENTION ASSEMBLY TYPE TO BE DETERMINED BY BWS, IF REQUIRED
3. OUTLET GATE VALVE MUST REMAIN

NOTE:
MAY OMIT ONE VALVE ON BY PASS LINE WHEN CONNECTING TO NEW MAIN

PLAN VIEW OF GALV. STEEL FRAME AND REMOVABLE SUPPORT

CMU WALLS

FOR SECTIONS SEE PLATES M35, M36 AND M40

OAHU

8" X 2" FM METER & BOX LAYOUT FIRE AND DOMESTIC USES - CMU WALLS

SCALE: NTS

STANDARD DETAILS

M34

2009 REVISION

OAHU

8" X 2" FM METER & BOX LAYOUT FIRE AND DOMESTIC USES - CMU WALLS

SCALE: NTS

STANDARD DETAILS

M35

NOTES FOR CMU WALL MANHOLE

1. BWS 3500 CONCRETE, 1500 PSI CMU AND GRADE 60 REINFORCING STEEL
2. DESIGN IS BASED ON: 250 PSF LIVE LOAD; 0 SURCHARGE; 60 PCF/FT AT REST PRESSURE; AND WATER TABLE BELOW BOTTOM SLAB; PER AASHTO LRFD BRIDGE DESIGN SPECIFICATION (1998) NON-TRAFFIC TYPE.
3. ALL CELLS SHALL BE GROUTED SOLID WITH 2500 PSI GROUT. TYPE M MORTAR
4. SPECIAL INSPECTION SHALL BE PROVIDED DURING CONSTRUCTION FOR CMU WALL.

NOTE:

REFER TO M36, M40, M41 AND M42 FOR DETAILS.

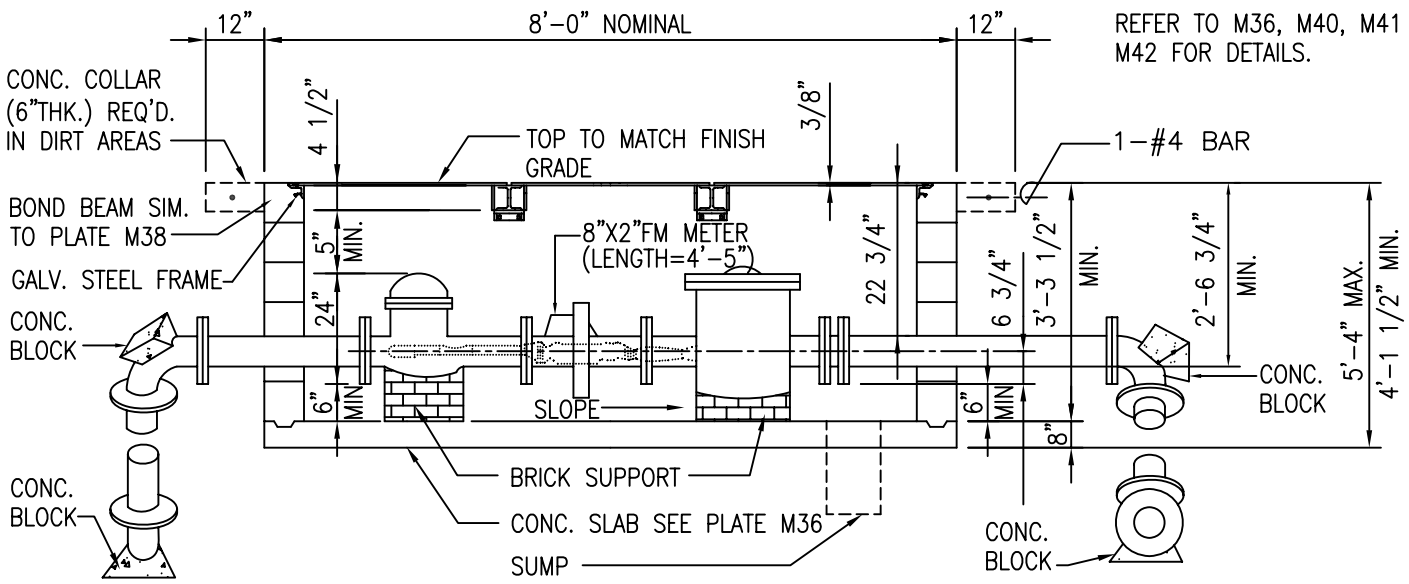

SECTION "A1-A1"

NOTE:

COMBINED DOMESTIC AND FIRE FLOW REQUIREMENT = NOT TO EXCEED 3,500 GPM

CMU WALLS

REVISION 2009

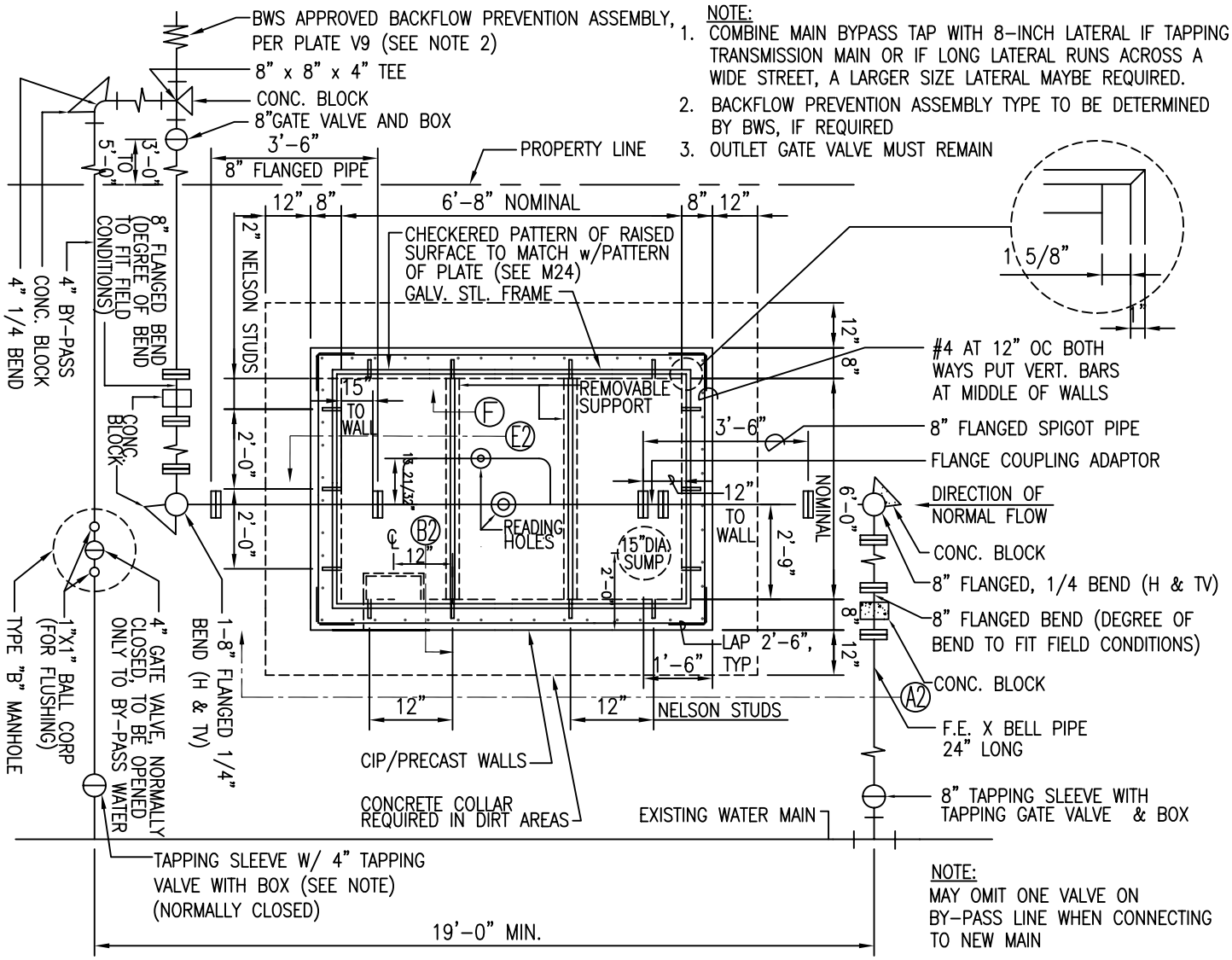

NOTE:
1. COMBINE MAIN BYPASS TAP WITH 8-INCH LATERAL IF TAPPING TRANSMISSION MAIN OR IF LONG LATERAL RUNS ACROSS A WIDE STREET, A LARGER SIZE LATERAL MAYBE REQUIRED.
2. BACKFLOW PREVENTION ASSEMBLY TYPE TO BE DETERMINED BY BWS, IF REQUIRED
3. OUTLET GATE VALVE MUST REMAIN

NOTE:
MAY OMIT ONE VALVE ON BY-PASS LINE WHEN CONNECTING TO NEW MAIN

FOR SECTIONS SEE M38, M39 AND M40

PLAN VIEW OF GALV. STEEL FRAME AND REMOVABLE SUPPORT

PRECAST/CAST IN PLACE WALLS

OAHU

8" X 2" FM METER & BOX LAYOUT FIRE AND DOMESTIC USES - PRECAST / CAST-IN-PLACE WALLS

SCALE: NTS

STANDARD DETAILS

M37

2009 REVISION

NOTES FOR PRECAST/CAST-IN-PLACE WALL MANHOLE

1. BWS 3500 CONCRETE AND GRADE 60 REINFORCING STEEL
2. DESIGN IS BASED ON: 250 PSF LIVE LOAD; 0 SURCHARGE; 60 PCF/FT AT REST PRESSURE; AND WATER TABLE BELOW BOTTOM SLAB, PER AASHTO LRFD BRIDGE DESIGN SPECIFICATION (1998). NON-TRAFFIC TYPE.

NOTE:

REFER TO M39 TO M42 FOR DETAILS.

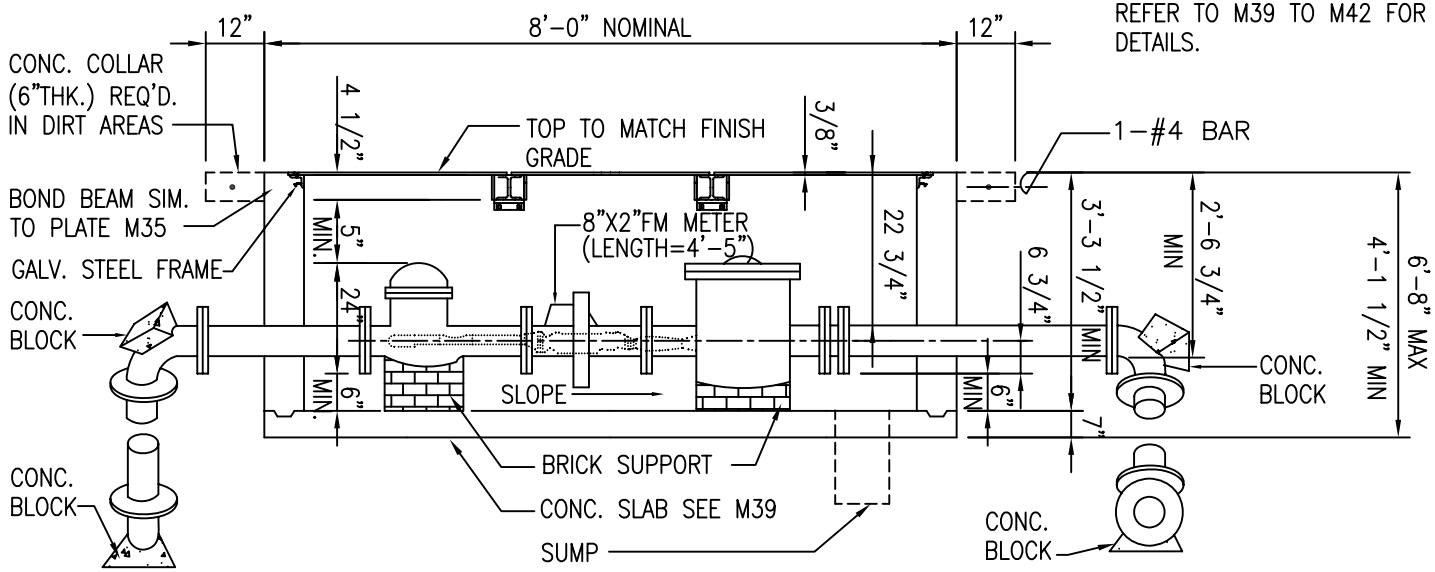

SECTION "A2-A2"

N.T.S.

NOTE:

COMBINED DOMESTIC AND FIRE FLOW REQUIREMENT = NOT TO EXCEED 3,500 GPM

PRECAST/CAST IN PLACE WALLS

OAHU

8" X 2" FM METER & BOX LAYOUT FIRE AND DOMESTIC USES - PRECAST / CAST-IN-PLACE WALLS

SCALE: NTS

STANDARD DETAILS

M38

2009 REVISION

BOARD OF WATER SUPPLY

CITY AND COUNTY OF HONOLULU
630 SOUTH BERETANIA STREET
HONOLULU, HI 96843

MUFI HANNEMANN, Mayor

RANDALL Y. S. CHUNG, Chairman
SAMUEL T. HATA
ALLY J. PARK
ROBERT K. CUNDIFF

JEOFFREY S. CUDIAMAT, Ex-Officio
BRENNON T. MORIOKA, Ex-Officio

WAYNE M. HASHIRO, P.E.
Manager and Chief Engineer

DEAN A. NAKANO
Deputy Manager and Chief Engineer

February 24, 2009

Mr. Mike McLeod, Vice President
Frank J. Martin Company
18424 Highway 99
Lynnwood, Washington 98037

Dear Mr. McLeod:

Subject: Your Letter Dated October 23, 2008, Requesting Approval of Polytubes High Density Polyethylene Copper Tube Sized Pipes

We approve the Polytubes High Density Polyethylene (HDPE) copper tube sized (CTS) ¾-inch to 2-inches for inclusion into the Water System Standards. The Polytubes HDPE CTS pipes, which conform to the applicable requirements of the AWWA and ASTM Standards for polyethylene (PE) tubing, shall be used specifically between the meter and the property valve where indicated on the service lateral standard details for Oahu.

We apologize for the delay in our review and appreciate your patience. If you have any questions, please contact Michael Domion at (808)748-5740.

Sincerely,

Wayne M. Hashiro

WAYNE M. HASHIRO, P.E.
Manager and Chief Engineer

Supp

BOARD OF WATER SUPPLY

CITY AND COUNTY OF HONOLULU
630 SOUTH BERETANIA STREET
HONOLULU, HI 96843

MUFI HANNEMANN, Mayor

RANDALL Y. S. CHUNG, Chairman
SAMUEL T. HATA
ALLY J. PARK
ROBERT K. CUNDIFF
MARC C. TILKER

CRAIG I. NISHIMURA, Ex-Officio
BRENNON T. MORIOKA, Ex-Officio

CLIFFORD P. LUM, P.E.
Manager and Chief Engineer

DEAN A. NAKANO
Deputy Manager and Chief Engineer

December 31, 2008

TO: WHOM IT MAY CONCERN

FROM: DEAN A. NAKANO, DEPUTY MANAGER AND CHIEF ENGINEER
BOARD OF WATER SUPPLY

SUBJECT: 2002 WATER SYSTEM STANDARDS AMENDMENTS

In response to the City and County of Honolulu, Department of Planning and Permitting new minimum utility depth policy (Engineering and Policy Memorandum No. CEB-1-08), the following amendments to the 2002 Water System Standards are effective immediately for **Oahu only**:

Division 100, Section 102 MAINS, Subsection 102.03 COVER:

Delete Table 100-3 – COVER FOR WATER MAINS (FEET) and replace with the following:

Table 100-3 - COVER FOR WATER MAINS (FEET)

Island	Minimum Cover for Pipe Diameter Indicated[a]						Maximum[b] For All Mains
	Smaller Than 4-Inch	4-Inch	6-Inch	8-Inch	12-Inch	Larger Than 12-Inch	
Oahu	3.0[c]	3.0	3.0	3.0	3.0	3.0	8
Hawaii	1.5	2.0	2.0	2.0	2.5	3.0	5
Kauai	3.0	3.0	3.0	3.0	3.0	3.0	8
Maui	N/A	2.5	3.0	3.0	3.0	3.0	5

a - Minimum cover for mains and laterals to be installed in State rights-of-way shall be 3 feet.

b - Over maximum cover requires Manager's approval and concrete jacketing of pipe.

c - Minimum cover for laterals located within the curb & gutter and sidewalk areas in the City rights-of-way shall be 18-inch.

Division 400, Section 403 STANDARD DETAILS:

Replace the following details with the enclosed details (2008 Revision):

Standard Detail	Description
L13	Copper Service Lateral for Connection Type "X" Meter Box 5/8", 3/4", & 1" Meters
L15	Copper Service Lateral for Connection Type III Meter Box 1-1/2" & 2" Meters
L20	Typical Detail for Installation of Ball Stop After Meter
L21	New Lateral Installation Schematic Detail
L22	Lateral Reconnection Schematic Detail

If you have any questions, please contact Michael Domion at 748-5740.

cc: Kauai, Maui, Hawaii Water Departments

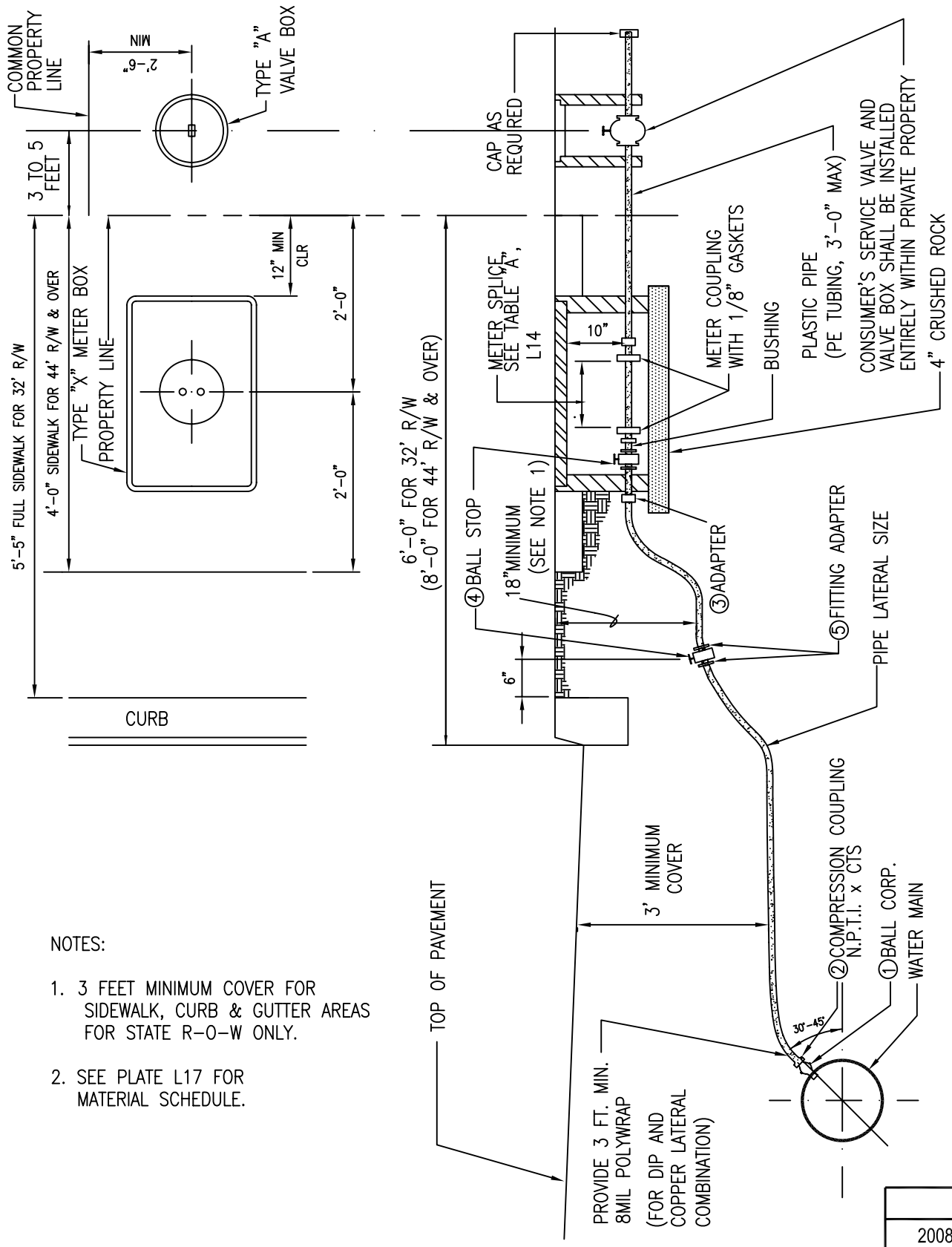

NOTES:

1. 3 FEET MINIMUM COVER FOR SIDEWALK, CURB & GUTTER AREAS FOR STATE R-O-W ONLY.
2. SEE PLATE L17 FOR MATERIAL SCHEDULE.

SCALE: NTS

2008	
REVISION	

OAHU	COPPER SERVICE LATERAL FOR CONNECTION TYPE "X" METER BOX 5/8", 3/4", & 1" METERS SCALE: NTS	STANDARD DETAILS	L13

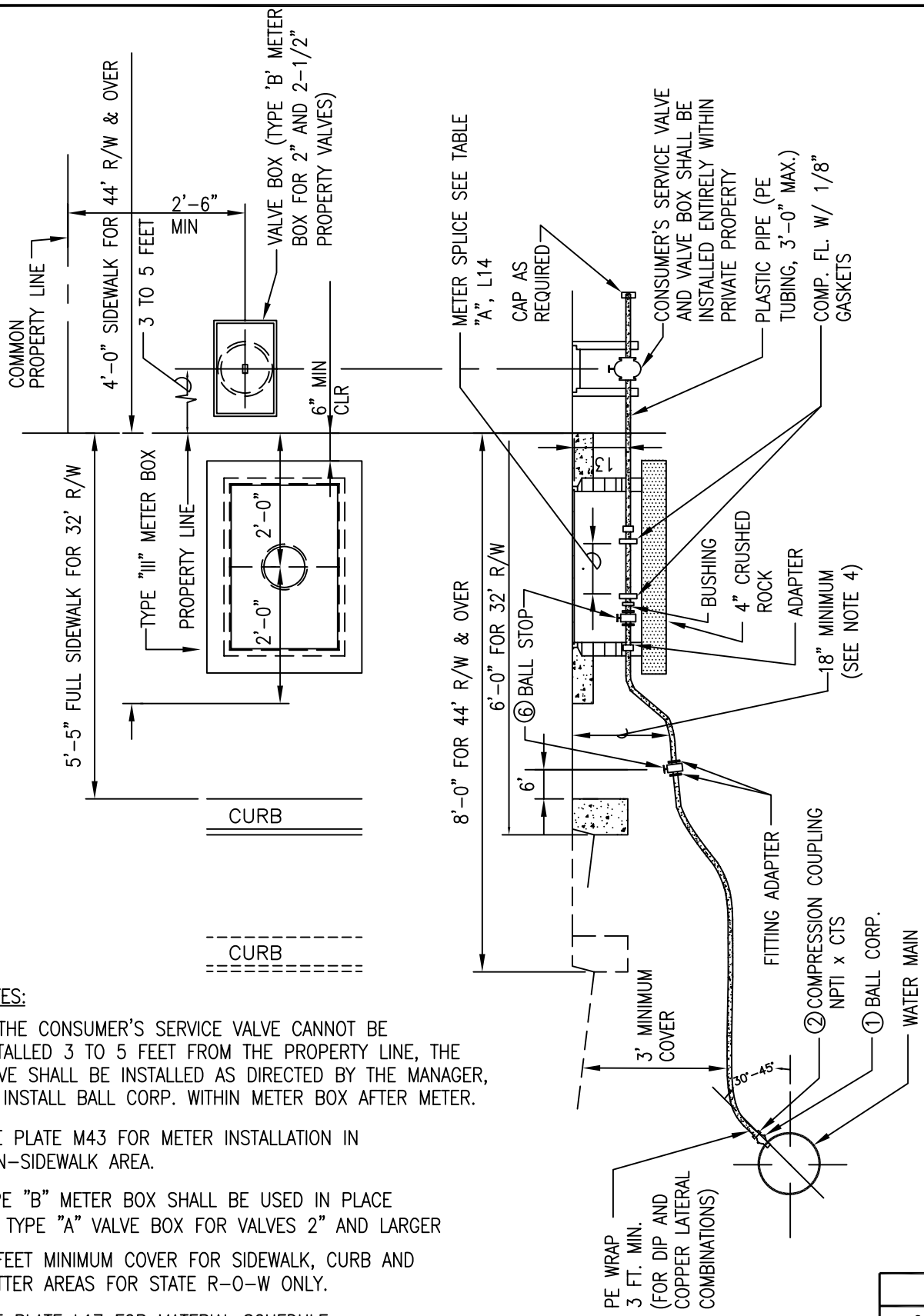

NOTES:

1. IF THE CONSUMER'S SERVICE VALVE CANNOT BE INSTALLED 3 TO 5 FEET FROM THE PROPERTY LINE, THE VALVE SHALL BE INSTALLED AS DIRECTED BY THE MANAGER, OR INSTALL BALL CORP. WITHIN METER BOX AFTER METER.
2. SEE PLATE M43 FOR METER INSTALLATION IN NON-SIDEWALK AREA.
3. TYPE "B" METER BOX SHALL BE USED IN PLACE OF TYPE "A" VALVE BOX FOR VALVES 2" AND LARGER
4. 3 FEET MINIMUM COVER FOR SIDEWALK, CURB AND GUTTER AREAS FOR STATE R-O-W ONLY.
5. SEE PLATE L17 FOR MATERIAL SCHEDULE.

			2008
			REVISION
OAHU	COPPER SERVICE LATERAL FOR CONNECTION TYPE III METER BOX 1 1/2" & 2" METERS SCALE: NTS	STANDARD DETAILS	L15

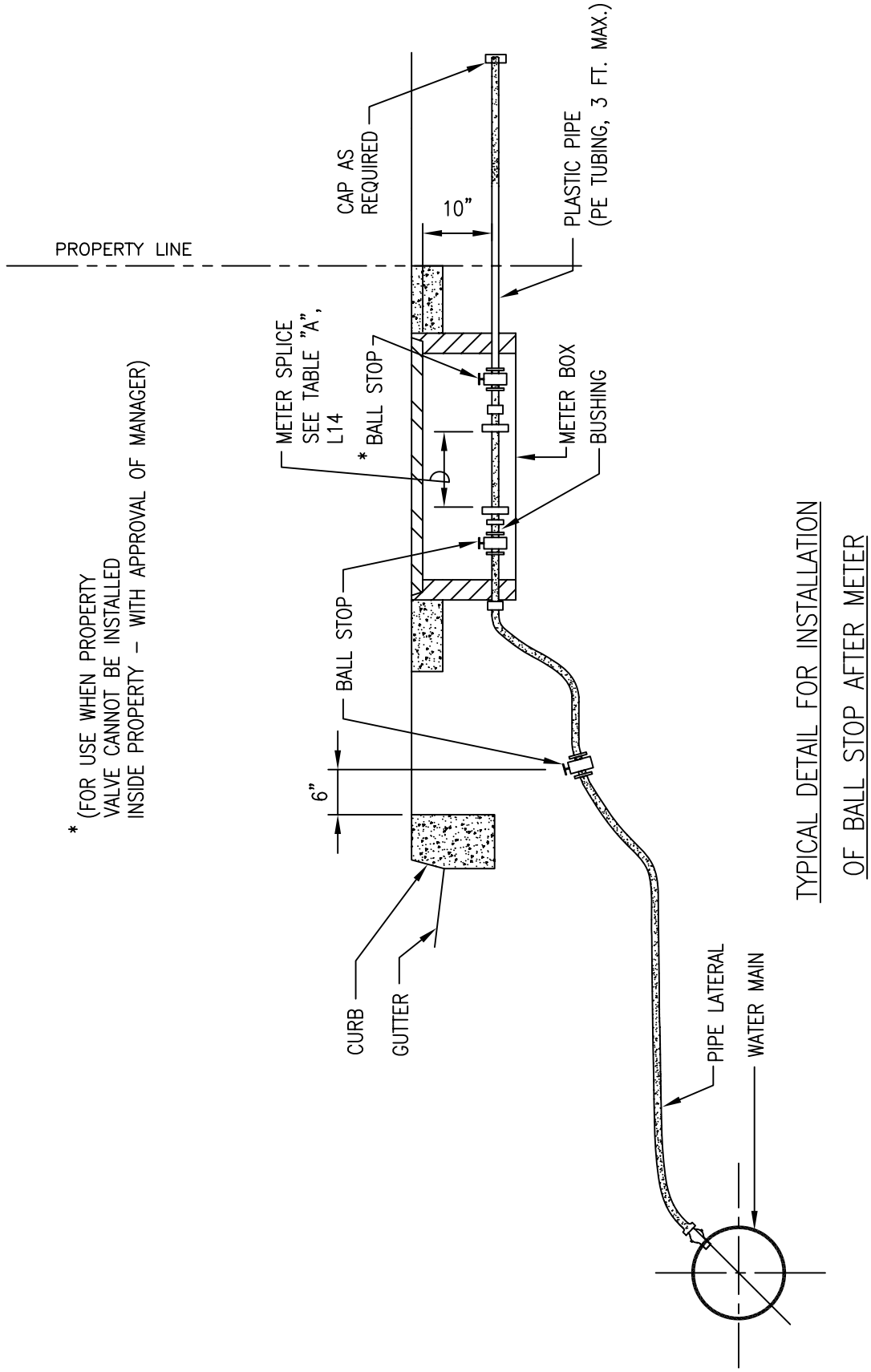

TYPICAL DETAIL FOR INSTALLATION
OF BALL STOP AFTER METER

			2008
			REVISION
OAHU	TYPICAL DETAIL FOR INSTALLATION OF BALL STOP AFTER METER SCALE: NTS	STANDARD DETAILS	L20

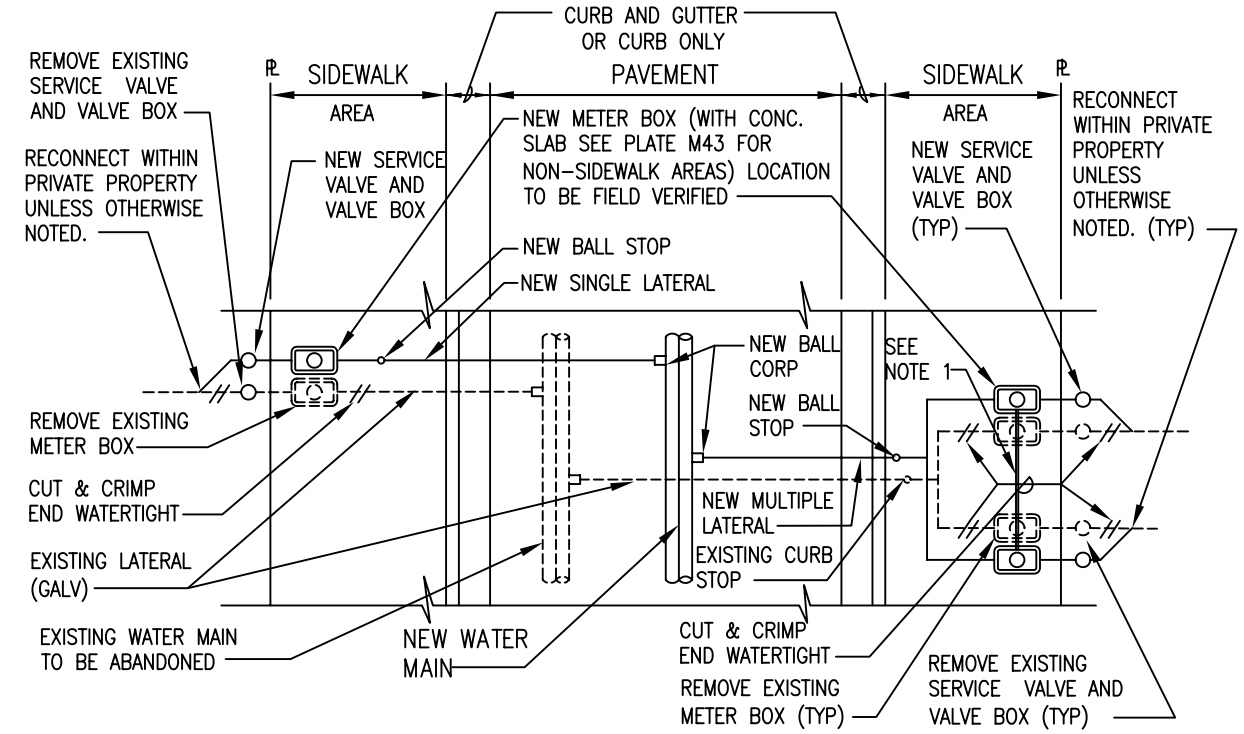

PLAN

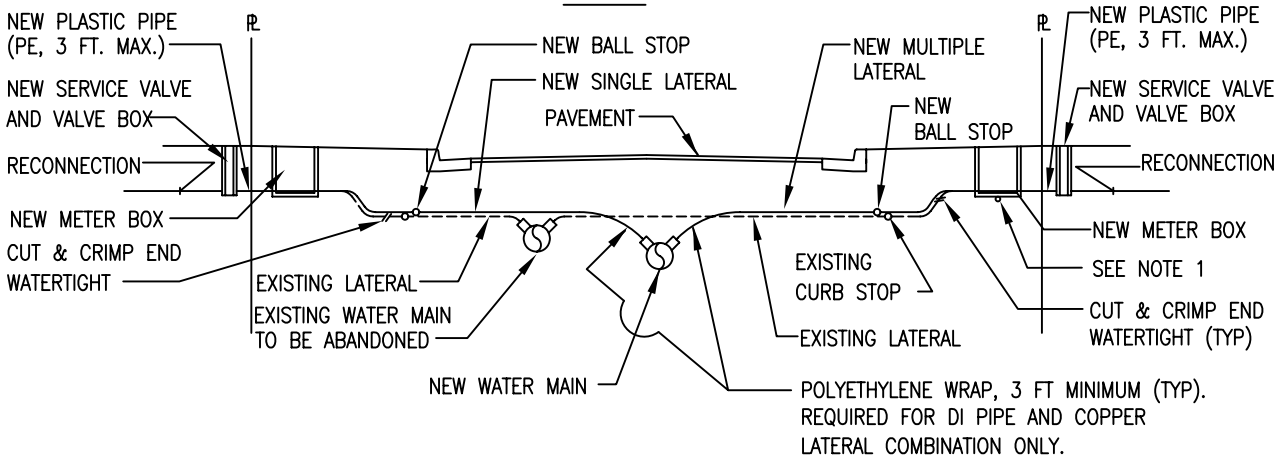

PROFILE

NOTE:

1. CONTRACTOR SHALL INSTALL A 3/4" PVC SCHEDULE 80 CONDUIT WITH STRING WHENEVER THE DISTANCE BETWEEN METER BOXES (2 TO 12 MULTIPLE METER BOXES) IS 4'-0" OR LESS (EDGE TO EDGE). CONDUIT SHALL EXTEND 2" WITHIN METER BOX, KEEP BOTH ENDS EXPOSED, PLUG OR TAPE TO PREVENT SOIL INTRUSION, AS REQUIRED. SAW CUT TRENCH AS REQUIRED AND REPAIR TO MATCH EXISTING CONDITIONS. FOR CONCRETE SLAB, REPAIR TRENCH WITH EPOXY MORTAR, LEVEL AND FINISH TO MATCH EXISTING.

			2008
			REVISION
OAHU	NEW LATERAL INSTALLATION SCHEMATIC DETAIL SCALE: NTS	STANDARD DETAILS	L21

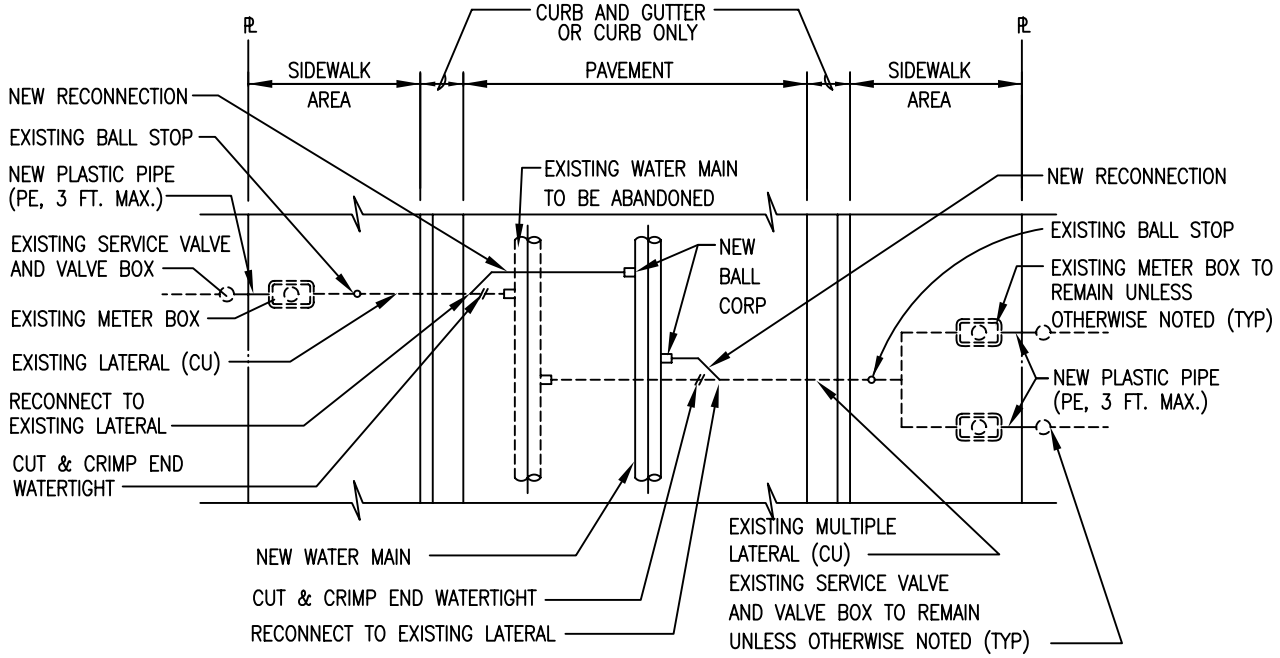

PLAN

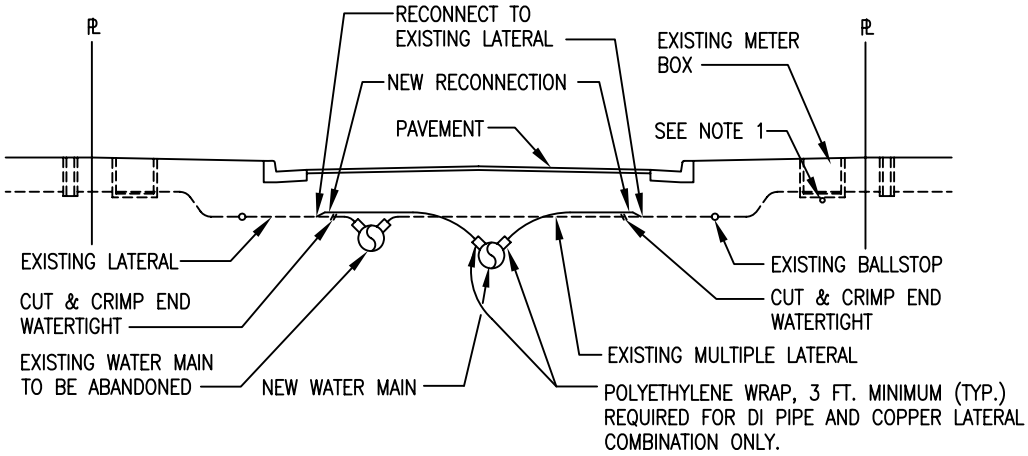

PROFILE

NOTE:

1. CONTRACTOR SHALL INSTALL A 3/4" PVC SCHEDULE 80 CONDUIT WITH STRING WHENEVER THE DISTANCE BETWEEN METER BOXES (2 TO 12 MULTIPLE METER BOXES) IS 4'-0" OR LESS (EDGE TO EDGE). CONDUIT SHALL EXTEND 2" WITHIN METER BOX, KEEP BOTH ENDS EXPOSED, PLUG OR TAPE TO PREVENT SOIL INTRUSION, AS REQUIRED. SAW CUT TRENCH AS REQUIRED AND REPAIR TO MATCH EXISTING CONDITIONS. FOR CONCRETE SLAB, REPAIR TRENCH WITH EPOXY MORTAR, LEVEL AND FINISH TO MATCH EXISTING.

			2008
			REVISION
OAHU	LATERAL RECONNECTION SCHEMATIC DETAIL SCALE: NTS	STANDARD DETAILS	L22

BOARD OF WATER SUPPLY

CITY AND COUNTY OF HONOLULU
630 SOUTH BERETANIA STREET
HONOLULU, HI 96843

MUFI HANNEMANN, Mayor

RANDALL Y. S. CHUNG, Chairman
SAMUEL T. HATA
ALLY J. PARK
ROBERT K. CUNDIFF
MARC C. TILKER

CRAIG I. NISHIMURA, Ex-Officio
BRENNON T. MORIOKA, Ex-Officio

CLIFFORD P. LUM
Manager and Chief Engineer

DEAN A. NAKANO
Deputy Manager and Chief Engineer

December 19, 2008

Mr. Bob Lake, President
CBC, Inc.
P. O. Box 669
Kailua, Hawaii 96734-0669

Dear Mr. Lake:

Subject: Your Letter Dated May 19, 2008 Regarding the State of Hawaii 2002 Water System Standards Consideration for Permanent Inclusion

We approve the American R/D Bevel Geared Gate Valve, Model 52, sizes 16-Inch to 42-Inch for inclusion into our Water System Standards.

If you have any questions, please contact Michael Domion at 748-5740.

Very truly yours

for DEAN A. NAKANO
Deputy Manager

cc: Kauai, Maui, Hawaii Water Departments

BOARD OF WATER SUPPLY

CITY AND COUNTY OF HONOLULU
630 SOUTH BERETANIA STREET
HONOLULU, HI 96843

PETER B. CARLISLE, MAYOR

RANDALL Y. S. CHUNG, Chairman
MAHEALANI CYPHER, Vice Chair
THERESIA C. McMURDO
DUANE R. MIYASHIRO
ADAM C. WONG

WESTLEY K.C. CHUN, Ex-Officio
GLENN M. OKIMOTO, Ex-Officio

ERNEST Y. W. LAU, P.E.
Manager and Chief Engineer

ELLEN E. HIRAYAMA, P.E.
Deputy Manager and Chief Engineer

May 18, 2012

Mr. Paul Boghossian
Armorcast Products Company
13230 Saticoy Street
North Hollywood, California 91605

Dear Mr. Boghossian:

Subject: Amendment to the Approval Letter Dated December 4, 2008 for Polymer Concrete Type X and Type B Meter Box and Cover

Effective immediately for Oahu only, all Polymer Concrete Type X Meter Box Covers shall be furnished with a reading lid (Drawing No. A6001869TR).

If you have any questions, please contact Michael Domion at (808)748-5740.

Very truly yours,

ERNEST Y. W. LAU, P.E.
Manager and Chief Engineer

Enclosure

cc: Kauai Department of Water Supply
Maui Department of Water Supply
Hawaii Department of Water Supply

APPROX. WT. = 25 LBS.

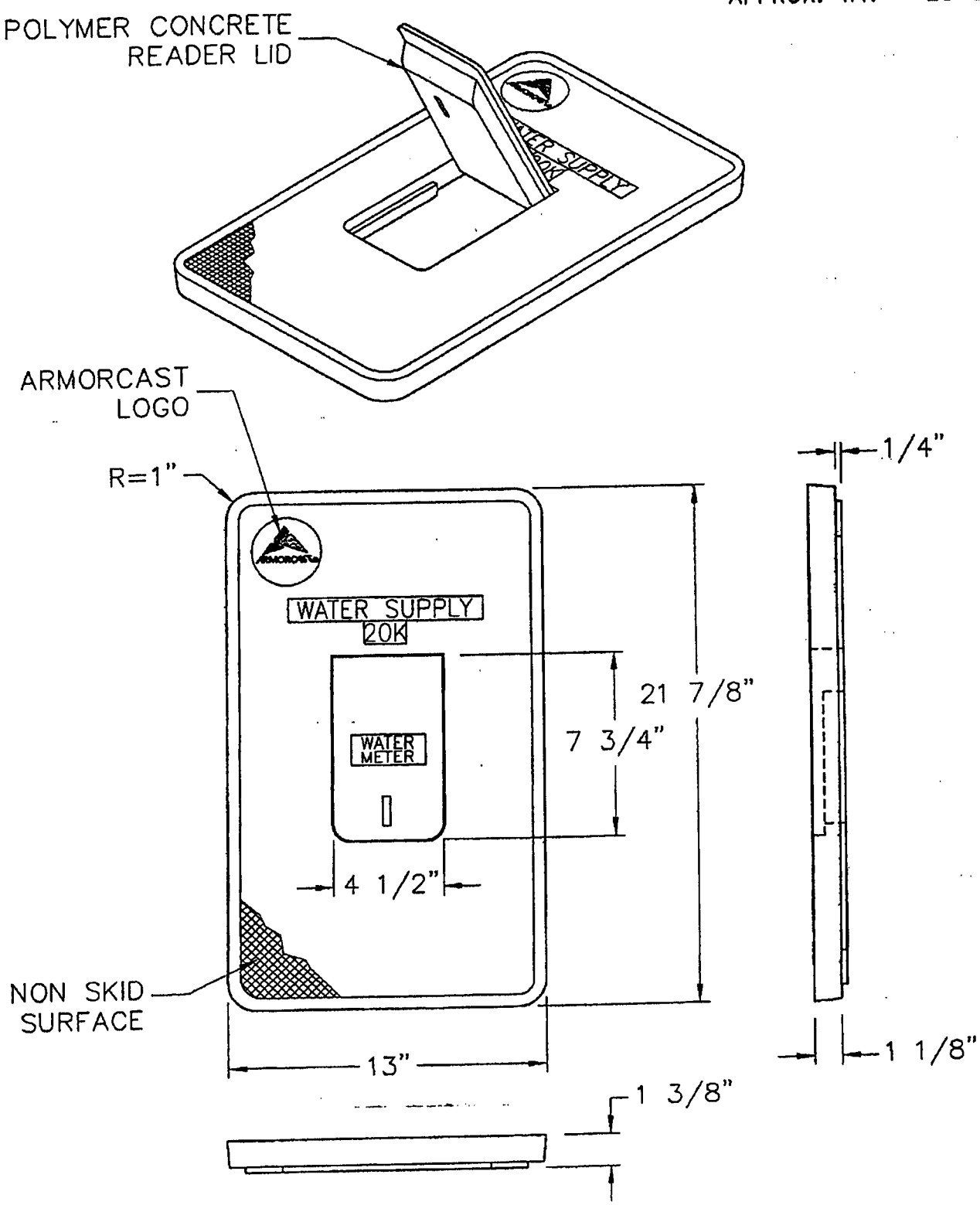

FILE # A6-1869TR-OAHU

13230 Saticoy Street,
North Hollywood, CA 91605
(818) 982-3600

ARMORCAST® PRODUCTS COMPANY

"THE INFORMATION IN THIS DRAWING IS CONFIDENTIAL. THE DRAWING IS NOT TO BE REPRODUCED OR ITS CONTENTS DIVULGED IN ANY WAY WHATSOEVER EXCEPT WITH THE PRIOR WRITTEN APPROVAL OF ARMORCAST PRODUCTS COMPANY. IT IS THE PROPERTY OF AND MUST BE RETURNED TO ARMORCAST PRODUCTS COMPANY, 13230 SATICOY STREET, NORTH HOLLYWOOD, CALIFORNIA 91605."

PART DESCRIPTION: 13" X 21 7/8" X 1 1/8" POLYMER CONCRETE COVER			
CUSTOMER: BOARD OF WATER SUPPLY - OAHU			
DRAWN: GL	DATE: 12/06	SCALE: NONE	MAX. LOAD: 20K
APROV.: WS	12/06	MATERIAL: POLYMER CONCRETE	DRAWING NUMBER: A6001869TR

BOARD OF WATER SUPPLY

CITY AND COUNTY OF HONOLULU
630 SOUTH BERETANIA STREET
HONOLULU, HI 96843

MUFI HANNEMANN, Mayor

RANDALL Y. S. CHUNG, Chairman
SAMUEL T. HATA
ALLY J. PARK
ROBERT K. CUNDIFF
MARC C. TILKER

CRAIG I. NISHIMURA, Ex-Officio
BRENNON T. MORIOKA, Ex-Officio

CLIFFORD P. LUM
Manager and Chief Engineer

DEAN A. NAKANO
Deputy Manager and Chief Engineer

December 4, 2008

Mr. Paul H. Boghossian
Amorcast Products Company
13230 Saticoy Street
North Hollywood, California 91605

Dear Mr. Boghossian:

Subject: Your Letter Dated July July 28, 2008 Regarding Product Approval Request for Polymer Concrete Type X and B Meter Box and Cover

We approve the following materials for inclusion in our Water System Standards:

	Model No.	Description
1.	A6000477	12"x21"x12" Polymer Concrete Type X Meter Box
2.	A6001869T	12"x21" Polymer Concrete Type X Cover
3.	A6000494	9"x14"x12" Polymer Concrete Type B Meter Box
4.	A6000482T	9"x14" Polymer Concrete Type B Cover

If you have any questions, please contact Michael Domion at (808)748-5740.

Very truly yours,

DEAN A. NAKANO
Deputy Manager

cc: Kauai, Maui, Hawaii Water Departments

M. Fuke, K. Shida
D. Ching, L. Fujikami, M. Domion, R. Remigio

08-0810

080810

Mgr
Dep
Eng

ARMORCAST PRODUCTS COMPANY

13230 Saticoy Street
North Hollywood, California 91605
Telephone: (818) 982-3600
Fax #: (818) 982-7742

RECEIVED
BOARD OF WATER SUPPLY

2008 JUL 30 A 11: 16

Clifford P. Lum
Manager and Chief Engineer
Honolulu Board of Water Supply
630 S. Beretania Street
Honolulu, HI 96843

July 28, 2008

Re: Request for Product Approval

Mr. Lum,

Please accept this correspondence as a formal request for approval of Armorcast Products Company polymer concrete meter boxes and covers for use as equal to your current specification. We have supplied both standard sizes for field evaluation in January of 2007. Below are the product number references for your convenience:

A6000477	12"x21"x12" Polymer Concrete Type X Meter Box
A6001869T	12"x21" Polymer Concrete Type X Cover
A6000494	9"x14"x12" Polymer Concrete Type B Meter Box
A6000482T	9"x14" Polymer Concrete Type B Cover

Armorcast enclosures have been installed over the past 20 years in many of Hawaii's utility distribution systems such as Verizon (Hawaiian Telephone) and Hawaiian Electric. We would truly appreciate the opportunity to service the Honolulu Board of Water Supply as well.

Sincerely,

Paul H. Boghossian
Armorcast Products Company

CC: Lan Yoneda, P.E./Honolulu Board of Water Supply
Wally Sunnaa, P.E./Armorcast Products Company

APPROX. WT. = 25 LBS.

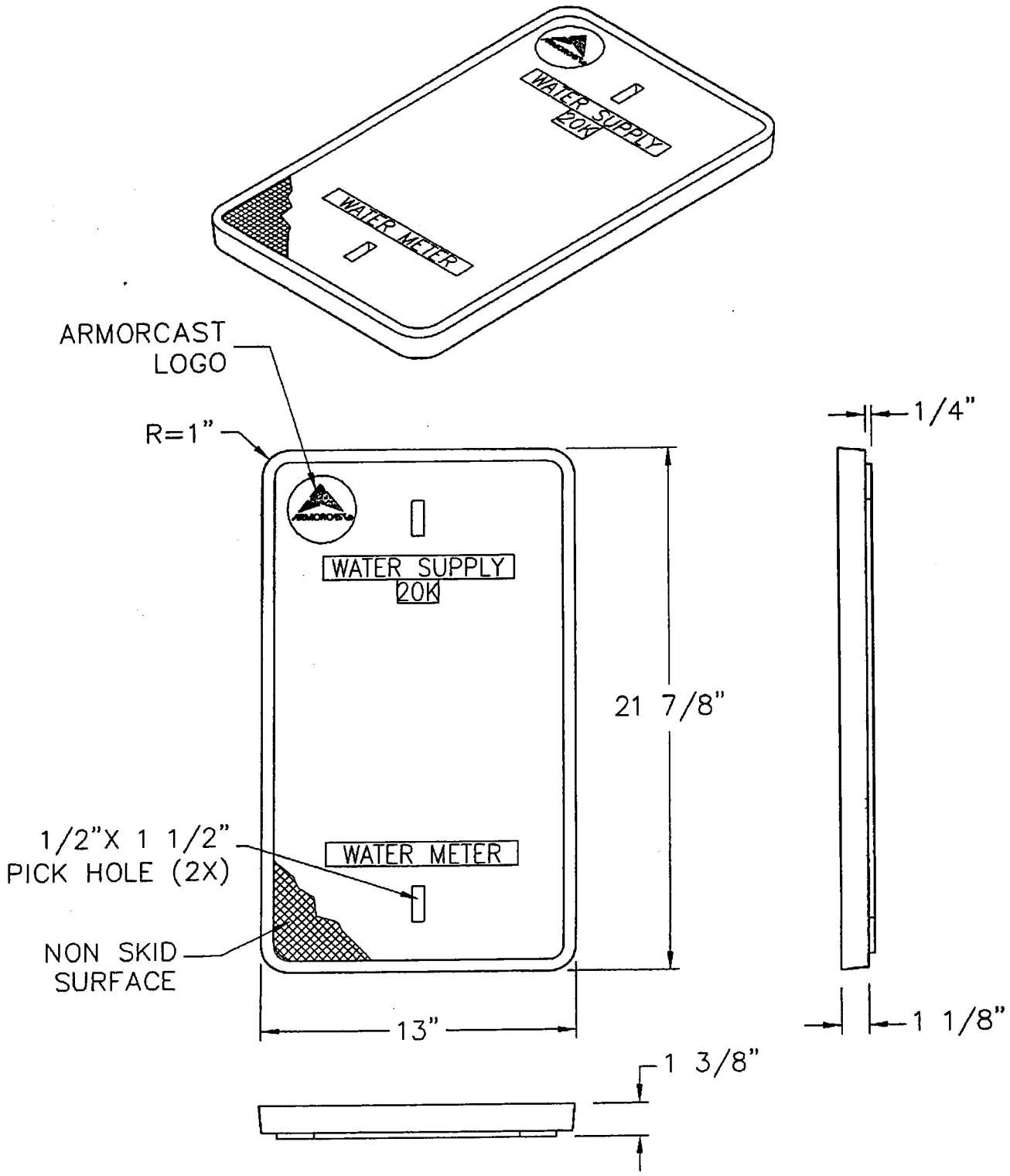

FILE # A6-1869T-OAHU

13230 Saticoy Street,
North Hollywood, CA 91605
(818) 982-3600

ARMORCAST® PRODUCTS COMPANY

"THE INFORMATION IN THIS DRAWING IS CONFIDENTIAL. THE DRAWING IS NOT TO BE REPRODUCED OR ITS CONTENTS DIVULGED IN ANY WAY WHATSOEVER EXCEPT WITH THE PRIOR WRITTEN APPROVAL OF ARMORCAST PRODUCTS COMPANY. IT IS THE PROPERTY OF AND MUST BE RETURNED TO ARMORCAST PRODUCTS COMPANY, 13230 SATICOY STREET, NORTH HOLLYWOOD, CALIFORNIA 91605."

PART DESCRIPTION: 13" X 21 7/8" X 1 1/8" POLYMER CONCRETE COVER			
CUSTOMER: BOARD OF WATER SUPPLY - OAHU			
DRAWN: GL	DATE: 12/06	SCALE: NONE	MAX. LOAD: 20K
APROV.: WS	12/06	MATERIAL: POLYMER CONCRETE	DRAWING NUMBER: A6001869T

APPROX. WT. = 25 LBS.

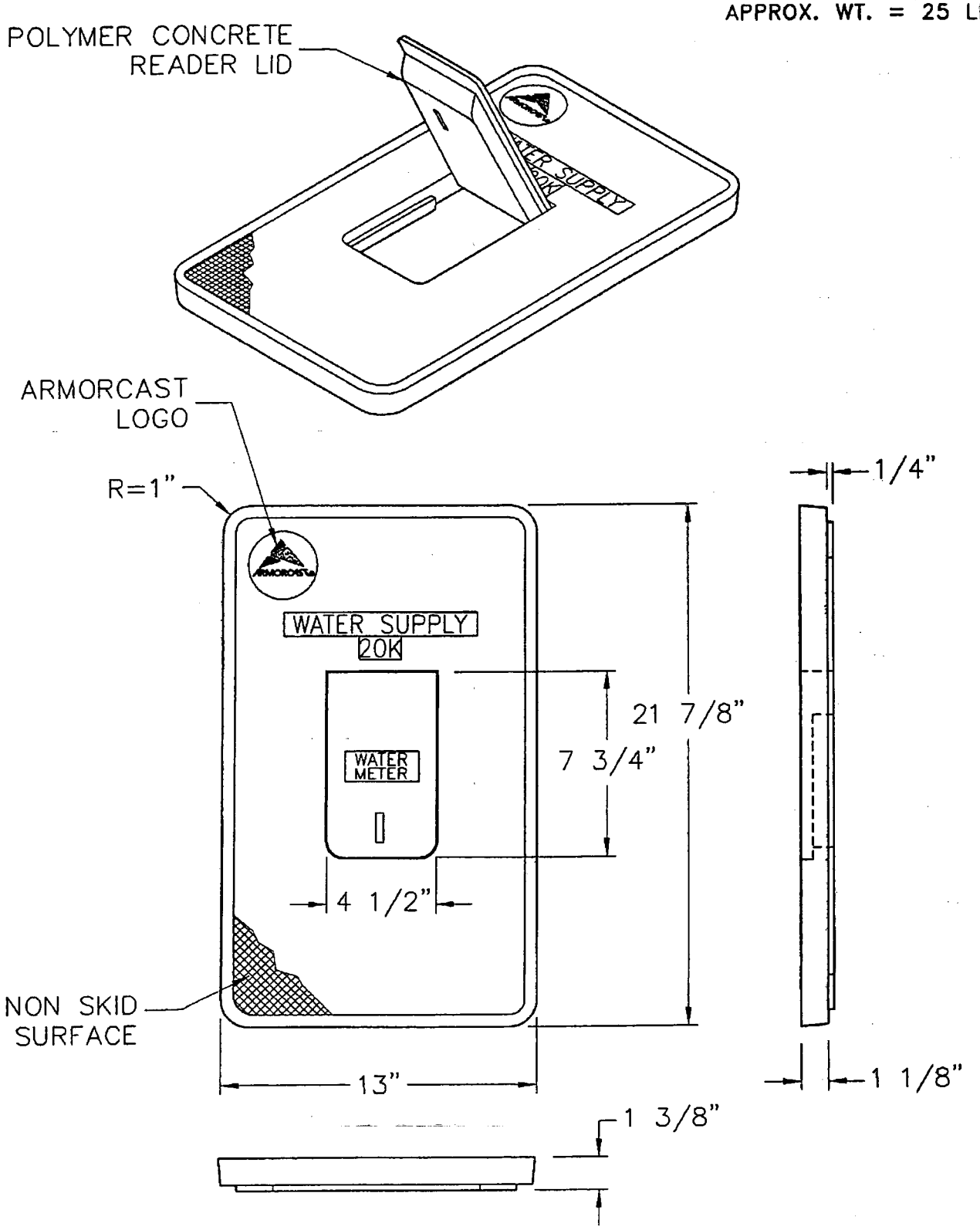

FILE # A6-1869TR-OAHU

13230 Saticoy Street,
North Hollywood, CA 91605
(818) 982-3600
ARMORCAST® PRODUCTS COMPANY

"THE INFORMATION IN THIS DRAWING IS CONFIDENTIAL. THE DRAWING IS NOT TO BE REPRODUCED OR ITS CONTENTS DIVULGED IN ANY WAY WHATSOEVER EXCEPT WITH THE PRIOR WRITTEN APPROVAL OF ARMORCAST PRODUCTS COMPANY. IT IS THE PROPERTY OF AND MUST BE RETURNED TO ARMORCAST PRODUCTS COMPANY, 13230 SATICOY STREET, NORTH HOLLYWOOD, CALIFORNIA 91605."

PART DESCRIPTION: 13" X 21 7/8" X 1 1/8" POLYMER CONCRETE COVER			
CUSTOMER: BOARD OF WATER SUPPLY - OAHU			
DRAWN: GL	DATE: 12/06	SCALE: NONE	MAX. LOAD: 20K
APROV.: WS	12/06	MATERIAL: POLYMER CONCRETE	DRAWING NUMBER: A6001869TR

APPROX. WT. 10 LBS.

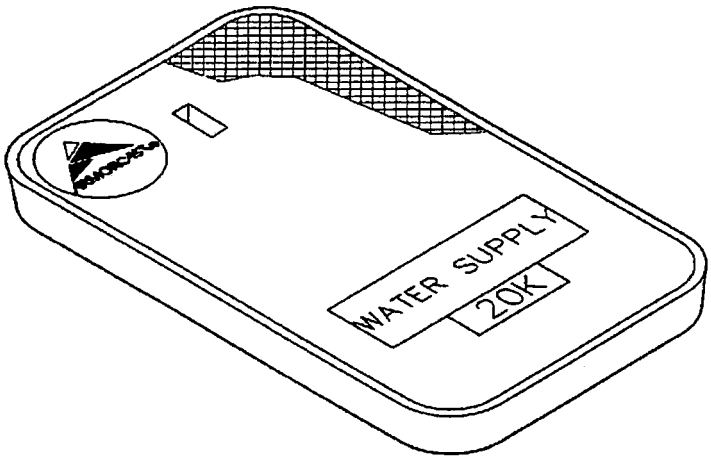

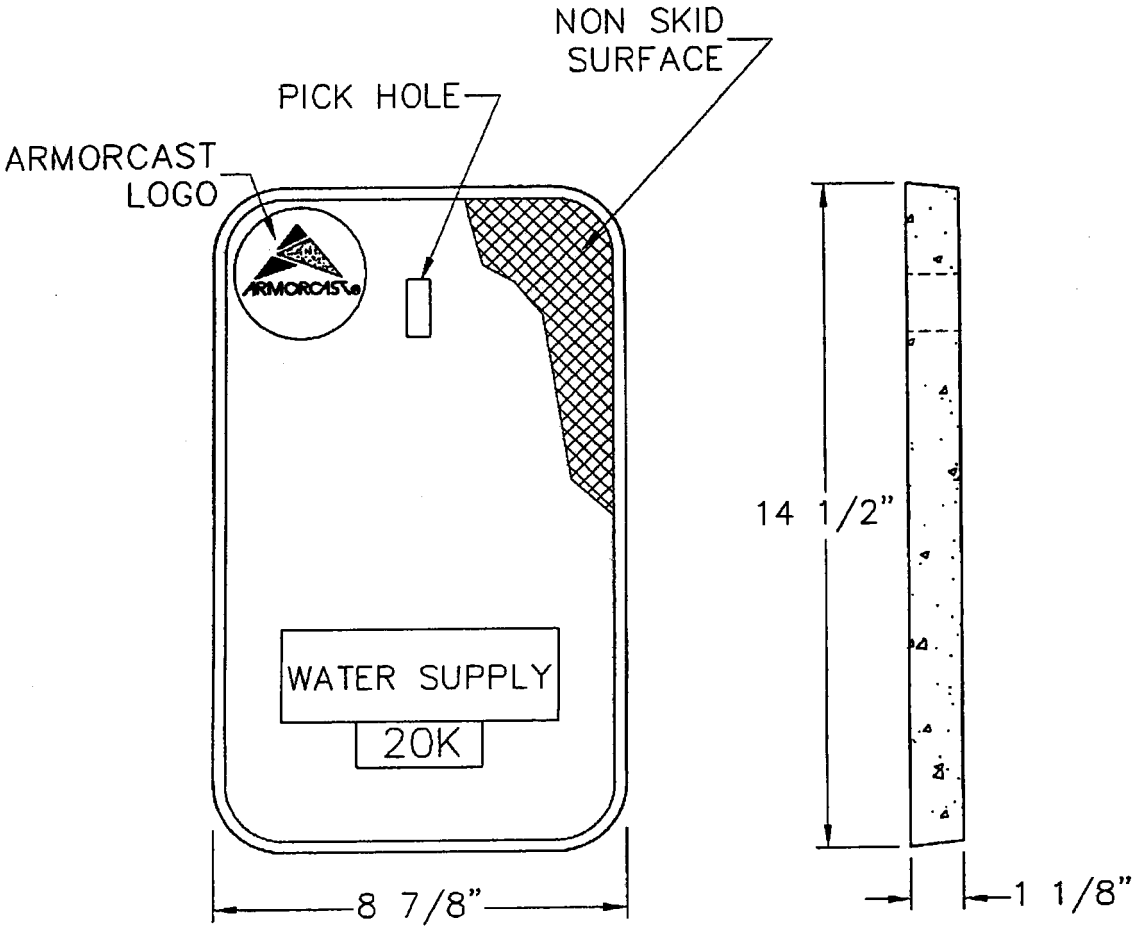

POLYMER CONCRETE COVER

FILE # A6-0482T-OAHU

13230 Saticoy Street,
North Hollywood, CA 91605
(818) 982-3600

ARMORCAST® PRODUCTS COMPANY

"THE INFORMATION IN THIS DRAWING IS CONFIDENTIAL. THE DRAWING IS NOT TO BE REPRODUCED OR ITS CONTENTS DIVULGED IN ANY WAY WHATSOEVER EXCEPT WITH THE PRIOR WRITTEN APPROVAL OF ARMORCAST PRODUCTS COMPANY. IT IS THE PROPERTY OF AND MUST BE RETURNED TO ARMORCAST PRODUCTS COMPANY, 13230 SATICOY STREET, NORTH HOLLYWOOD, CALIFORNIA 91605."

PART DESCRIPTION: 9" X 14" X 1 1/8" POLYMER CONCRETE COVER			
CUSTOMER: BOARD OF WATER SUPPLY - OAHU			
DRAWN: OA	DATE: 12/06	SCALE: NONE	MAX. LOAD: 20K
APROV.: WS	12/06	MATERIAL: POLYMER CONCRETE	DRAWING NUMBER: A6000482T

APPROX. BOX WT. = 40 LBS.

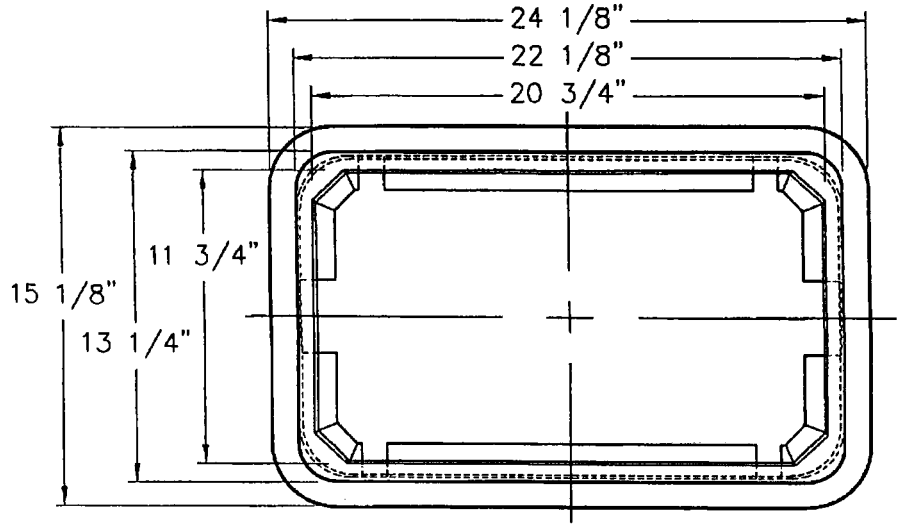

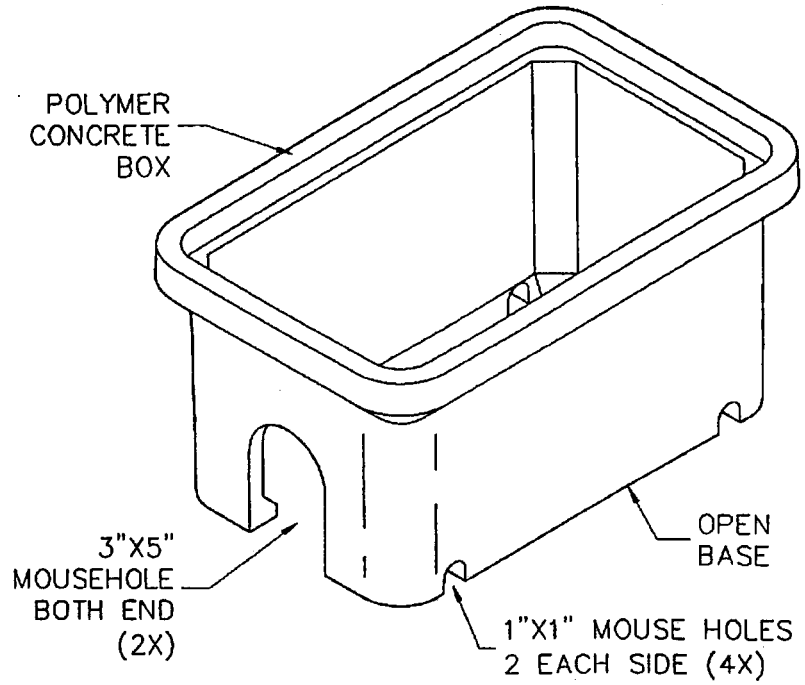

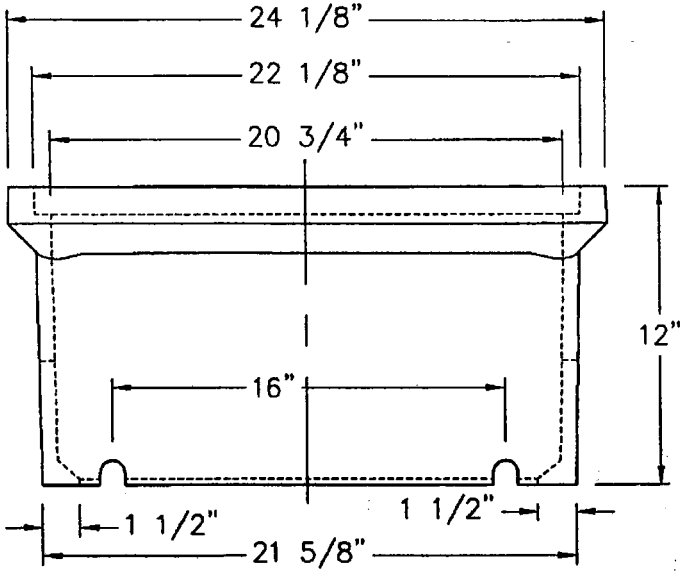

SIDE VIEW

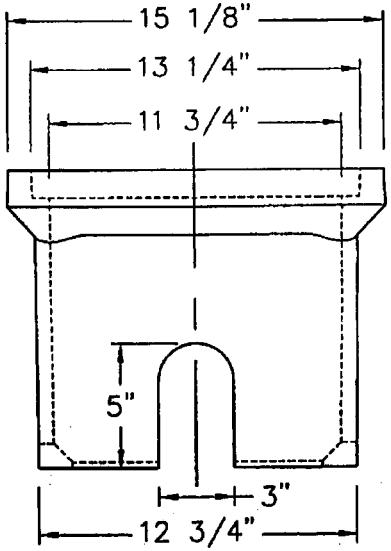

END VIEW

FOR 1 1/2" & 2" METER

A6-0477X12-OAHU

ARMORCAST® PRODUCTS COMPANY 13230 Saticoy Street, North Hollywood, CA 91605 (818) 982-3600	PART DESCRIPTION: TYPE X WATER METER BOX - 12" X 21" X 12"			
	CUSTOMER: BOARD OF WATER SUPPLY - OAHU			
"THE INFORMATION IN THIS DRAWING IS CONFIDENTIAL. THE DRAWING IS NOT TO BE REPRODUCED OR ITS CONTENTS SHARED IN ANY WAY WHATSOEVER EXCEPT WITH THE PRIOR WRITTEN APPROVAL OF ARMORCAST PRODUCTS COMPANY. IT IS THE PROPERTY OF AND MUST BE RETURNED TO ARMORCAST PRODUCTS COMPANY, 13230 SATICOY STREET, NORTH HOLLYWOOD, CALIFORNIA 91605."	DRAWN: GL	DATE: 12/06	SCALE: NONE	MAX. LOAD
	APPROV.: WS	12/06	MATERIAL: POLYMER CONCRETE	DRAWING NUMBER: A6000477-OAHU

APROX. WT. 26 LBS

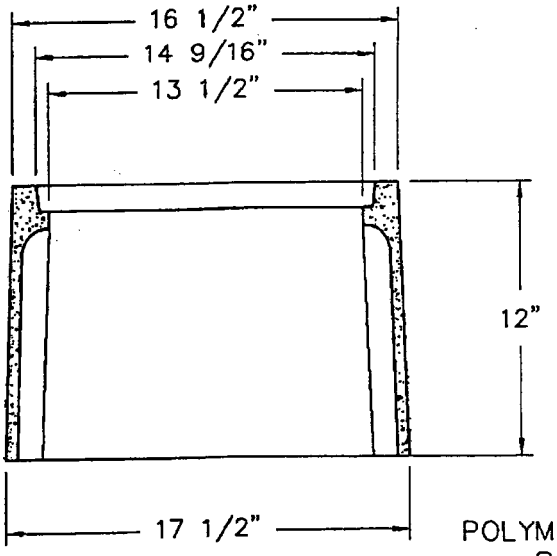

SECTION A–A

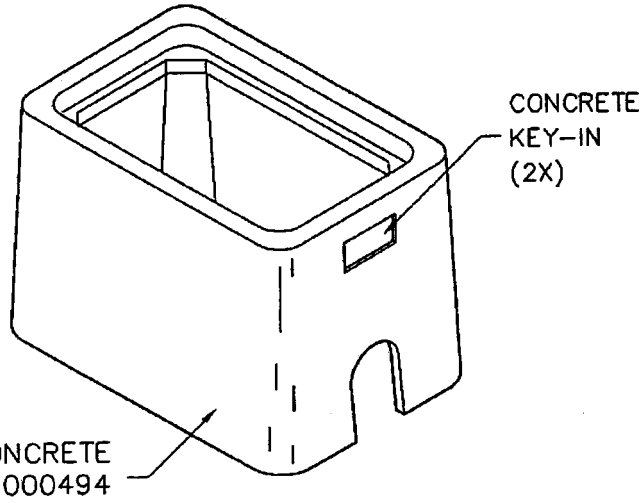

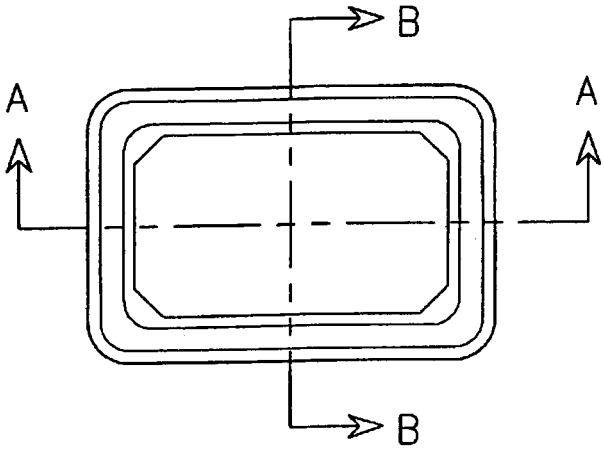

TOP VIEW

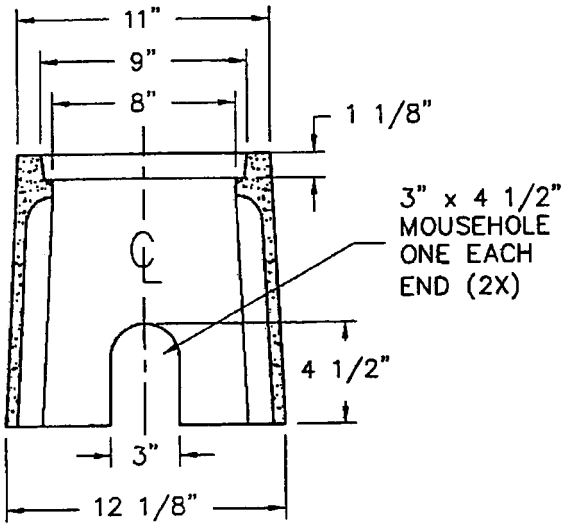

SECTION B–B

FILE # A6-0491-OAHU

13230 Saticoy Street,
North Hollywood, CA 91605
(818) 982-3600
ARMORCAST® PRODUCTS COMPANY

"THE INFORMATION IN THIS DRAWING IS CONFIDENTIAL. THE DRAWING IS NOT TO BE REPRODUCED OR ITS CONTENTS DIVULGED IN ANY WAY WHATSOEVER EXCEPT WITH THE PRIOR WRITTEN APPROVAL OF ARMORCAST PRODUCTS COMPANY. IT IS THE PROPERTY OF AND MUST BE RETURNED TO ARMORCAST PRODUCTS COMPANY, 13230 SATICOY STREET, NORTH HOLLYWOOD, CALIFORNIA 91605."

PART DESCRIPTION: 9" X 14" X 12" POLYMER CONCRETE BOX			
CUSTOMER: BOARD OF WATER SUPPLY – OAHU			
DRAWN: OA	DATE: 9/02	SCALE: NONE	MAX. LOAD
APROV.: WS	9/02	MATERIAL: POLYMER CONCRETE	DRAWING NUMBER: A6000494

BOARD OF WATER SUPPLY

CITY AND COUNTY OF HONOLULU
630 SOUTH BERETANIA STREET
HONOLULU, HI 96843

October 21, 2008

MUFI HANNEMANN, Mayor

RANDALL Y. S. CHUNG, Chairman
SAMUEL T. HATA
ALLY J. PARK
ROBERT K. CUNDIFF
MARC C. TILKER

CRAIG I. NISHIMURA, Ex-Officio
BRENNON T. MORIOKA, Ex-Officio

CLIFFORD P. LUM
Manager and Chief Engineer

DEAN A. NAKANO
Deputy Manager and Chief Engineer

TO: WHOM IT MAY CONCERN

FROM: CLIFFORD P. LUM, MANAGER AND CHIEF ENGINEER
BOARD OF WATER SUPPLY

SUBJECT: 2002 WATER SYSTEM STANDARDS AMENDMENT FOR DISTANCE BETWEEN MAIN VALVES

The following amendments to the 2002 Water System Standards are effective immediately for **Oahu only**:

Division 100, Section 103 MAIN VALVES, Subsection 103.01 LOCATION, TYPE, WORKING PRESSURE :

1. Delete Table 100-9 and replace with the following:

Table 100-9 - MAXIMUM DISTANCE BETWEEN MAIN VALVES (FEET)		
Residential, Agricultural	Transmission Mains	All Others Districts
750	2,000[a,d]	500[b,c]

a - *For Maui only: For mains 16-inch diameter or larger or as determined by the Manager, otherwise 1,000 feet.*
b - Or as determined by the Manager.
c - For mains that provide a one-way feed to subdivisions with more than 100 lots as determined by the Manager.
d - *For Oahu only: For mains 16-inch diameter or larger, maximum distance between main valves shall be 1,000 feet.*

2. Delete Table 100-10 and replace with the following:

Table 100-10 - TYPES AND SIZE OF MAIN VALVES			
Island	Gate Valves	Bevel Geared	Butterfly
Maui	5[a]	NA	6
Kauai, Oahu	1	2[b]	2
Hawaii	3	NA	4

1 - 12-inch and smaller
2 - 16-inch and larger
3 - 8-inch and smaller
4 - Larger than 8-inch
5 - 16-inch and smaller (subject to pressure)
6 - 18-inch and larger
NA - Not Allowed

a - For 16-inch mains with working pressure of 100 psi or greater, use butterfly valves.
b - *For Oahu Only: Install bevel-geared gate valves with bypass at key locations including, but not limited to, facilities, intersections (cluster valve locations) and every 2,000 feet spacing for long continuous transmission mains. The Manager may specify the type of valve to be used for transmission mains.*

If you have any questions, please contact Michael Domion at 748-5740.

cc: Kauai, Maui, Hawaii Water Departments

JT

BOARD OF WATER SUPPLY

CITY AND COUNTY OF HONOLULU
630 SOUTH BERETANIA STREET
HONOLULU, HI 96843

MUFI HANNEMANN, Mayor

RANDALL Y. S. CHUNG, Chairman
SAMUEL T. HATA
ALLY J. PARK
ROBERT K. CUNDIFF
MARC C. TILKER

CRAIG I. NISHIMURA, Ex-Officio
BRENNON T. MORIOKA, Ex-Officio

CLIFFORD P. LUM
Manager and Chief Engineer

DEAN A. NAKANO
Deputy Manager and Chief Engineer

March 18, 2008

TO: WHOM IT MAY CONCERN

FROM: CLIFFORD P. LUM, MANAGER AND CHIEF ENGINEER
BOARD OF WATER SUPPLY

SUBJECT: 2002 WATER SYSTEM STANDARDS AMENDMENTS FOR NUTS AND BOLTS

The following amendments to the 2002 Water System Standards are effective immediately for **Oahu only**:

Division 200, Section 202 DUCTILE IRON PIPE, FITTINGS AND APPURTENANCES, Subsection 202.04 FLANGED JOINT:

Delete the following (4th paragraph, page 202-5):

The bolts used for all flanged joints shall protrude beyond the nuts a minimum of 1/8-inch, but shall not exceed 1/2-inch. All stainless steel bolt and nut threads shall be pre-coated with anti-seizing graphite compound before installation. Should the bolts protrude more than 1/2-inch, the bolt ends shall be machine cut before installation. Bolts shall be with cut threads and American Standard heavy hexagon heads. Nuts shall be compatible with the bolts in strength and material characteristics. Nuts shall be hexagon. Bolts and nuts for flanges shall conform to one of the following:

1. Silicon bronze bolts and nuts shall conform to ASTM F467 and F468.

2. Stainless Steel bolts and nuts shall conform to ASTM F593 and F594, type 316.

Replace with the following:

The bolts used for all flanged joints shall protrude beyond the nuts a minimum of 1/8-inch, but shall not exceed 1/2-inch. All stainless steel bolt and nut threads shall be pre-coated with anti-seizing graphite compound before installation. Should the bolts protrude more than 1/2-inch, the bolt ends shall be machine cut before installation. Bolts shall be with cut threads and American Standard heavy hexagon heads. Nuts shall be compatible with the bolts in strength and material characteristics. Nuts shall be hexagon. Bolts and nuts for flanges shall conform to one of the following:

1. Silicon bronze bolts and nuts shall conform to ASTM F467 and F468.

2. For installations in vaults: Bolts and nuts shall be stainless steel, type 304, and shall conform to ASTM F593 and F594.

3. For buried installations: Bolts and nuts shall be corrosion resistant coated Cor-Ten®.

Division 200, Section 206 HYDRANTS AND APPURTENANCES, Subsection 206.01 GENERAL:

Delete the following (6th paragraph, page 206-1):

Each hydrant body shall be furnished with a set of break-off bolts, nuts, and full face gasket. Bolts shall be stainless steel 5/8" x 3" machine bolts with hexagon heads American Standard heavy. Bolts shall be break-off type drilled 11/32" x 1-3/8". Nuts shall be stainless steel American Standard heavy cold punched, hexagon nuts. Gaskets shall be 1/8-inch cloth inserted rubber. Hydrant flange shall have six (6) 3/4-inch bolt holes on 9.375-inch diameter.

Replace with the following:

Each hydrant body shall be furnished with a set of break-off bolts, nuts, and full face gasket. Bolts shall be hot-dipped galvanized 5/8"x3" machine bolts with hexagon heads American Standard heavy. Bolts shall be break-off type drilled 11/32"x1-3/8". Nuts shall be hot-dipped galvanized American Standard heavy cold-punched, hexagon nuts. Gaskets shall be 1/8-inch cloth inserted rubber. Hydrant flange shall have six (6) 3/4-inch bolt holes on 9.375-inch diameter.

If you have any questions, please contact Jason Takaki at 748-5740.

cc: Kauai, Maui, Hawaii Water Departments
M. Fuke, E. Kawata, K. Shida
J. Takaki, D. Ching, R. Remigio, Design Section

MD:st

BOARD OF WATER SUPPLY

CITY AND COUNTY OF HONOLULU
630 SOUTH BERETANIA STREET
HONOLULU, HI 96843

MUFI HANNEMANN, Mayor

RANDALL Y. S. CHUNG, Chairman
SAMUEL T. HATA
ALLY J. PARK
ROBERT K. CUNDIFF
MARC C. TILKER

LAVERNE T. HIGA, Ex-Officio
BARRY FUKUNAGA, Ex-Officio

CLIFFORD P. LUM
Manager and Chief Engineer

DEAN A. NAKANO
Deputy Manager and Chief Engineer

October 31, 2007

Mr. Christopher King
Western Division Manager
Sigma Corporation
316 So. Bon View Avenue
Ontario, California 91761

Dear Mr. King:

Subject: Your Letter Dated January 9, 2007 Regarding Approval of SIGMA AWWA C110 Fittings

We approve the SIGMA Full Body Mechanical Joint Fittings and the Flanged Fittings for inclusion in the Water System Standards. The mechanical and flanged joint fittings meet the requirements of the AWWA C110 Standard.

If you have any questions, please contact Jason Takaki at (808)748-5740.

Very truly yours,

HOWARD H. TANAKA, Head
Capital Projects Division – Engineering Branch

cc: County Departments of Water
Jon Franzmeier (HISCO, Inc.)

GS:em

cc: Design Sect., Construction, Admin., Field Op., Plant Op., Supp. Sect.

Supp

BOARD OF WATER SUPPLY

CITY AND COUNTY OF HONOLULU
630 SOUTH BERETANIA STREET
HONOLULU, HI 96843

MUFI HANNEMANN, Mayor

RANDALL Y. S. CHUNG, Chairman
HERBERT S. K. KAOPUA, SR.
SAMUEL T. HATA
ALLY J. PARK
ROBERT K. CUNDIFF

LAVERNE T. HIGA, Ex-Officio
BARRY FUKUNAGA, Ex-Officio

CLIFFORD P. LUM
Manager and Chief Engineer

DEAN A. NAKANO
Deputy Manager and Chief Engineer

May 4, 2007

Mr. Michael Berry
Western Division Manager
Star Pipe Products
263 Livorna Heights Road
Alamo, California 94507

Dear Mr. Berry:

Subject: Letter Dated March 23, 2005 Requesting Inclusion of the Star Pipe Products C110 FB MJ and Flanged Fittings in the Approved Materials List

We approve the Star Pipe Products C110 Full-body Mechanical and Flanged Joint Fittings for inclusion in the Water System Standards for Oahu only. The mechanical and flanged joint fittings meet the applicable requirements of the AWWA Standards as well as the testing and evaluation criteria being enforced during the probationary period.

This approval officially ends the two-year probationary period without reported incident. Henceforth, Star Pipe products, like any other products, shall be subject to normal material monitoring. If deficiencies reappear, appropriate action will be taken.

If you have any questions, please contact Jason Takaki at (808)748-5740.

Very truly yours,

Howard H. Tanaka

HOWARD H. TANAKA, Head
Capital Projects Division – Engineering Branch

cc: Supp. Sect.

BOARD OF WATER SUPPLY

CITY AND COUNTY OF HONOLULU
630 SOUTH BERETANIA STREET
HONOLULU, HI 96843

MUFI HANNEMANN, Mayor

RANDALL Y. S. CHUNG, Chairman
HERBERT S. K. KAOPUA, SR.
SAMUEL T. HATA
ALLY J. PARK
ROBERT K. CUNDIFF

RODNEY K. HARAGA, Ex-Officio
LAVERNE T. HIGA, Ex-Officio

CLIFFORD P. LUM
Manager and Chief Engineer

August 25, 2006

TO: WHOM IT MAY CONCERN

FROM: CLIFFORD P. LUM, MANAGER AND CHIEF ENGINEER
BOARD OF WATER SUPPLY

SUBJECT: INSTALLATION OF ELECTRONIC MARKERS

Effective immediately, the Honolulu Board of Water Supply (BWS) requires the installation of electronic markers in conjunction with all installations of water mains within the municipal water system, including any mains that may be dedicated to the BWS in the future. Electronic markers shall be installed along all mains, 4-inch diameter and larger, including non-potable water mains and fire hydrant and meter laterals. Electronic markers shall be installed in lieu of copper toning wire, where specified by the Water System Standards. Installation of the markers will facilitate pinpointing the locations of water mains in the field.

Installations shall be in accordance with the latest special provision for Electronic Markers. A copy of the current specification is attached.

If you have any questions, please contact Jason Takaki at 748-5740.

Attachments

cc: Customer Care (R. Chun)
Field Operations
D. Ching
F. Fung
J. Takaki

JT:em

SECTION SP-17 ELECTRONIC MARKERS

17.1 DESCRIPTION

This item of work shall include the furnishing of all labor, materials, tools and equipment necessary for the installation and testing of electronic markers for “locating” purposes.

Electronic markers shall be installed over all new mains 4-inch and larger including non-potable water mains, concrete jackets, mains under concrete pavement, and fire hydrant and meter laterals.

For plastic pipe, electronic markers shall be installed in lieu of copper toning wire.

17.2 MATERIAL

Electronic markers shall be the “Omni Marker”, manufactured by Tempo, or approved equal.

Application	Color	Frequency	Model Number	UPC Number
Potable Water Main	Blue	145.7 kHz	Model 161	60766
Non-Potable Water Main	Purple	66.35 kHz	Model 168	11050

17.3 CONSTRUCTION REQUIREMENTS

1. Placement

   Electronic markers shall be hand placed in the trench, centered over the pipe and covered with sufficient base course material to prevent shifting prior to backfilling of the trench. Installation shall be at a minimum depth of two (2) feet and a maximum depth of three (3) feet from finish grade.

2. Location

   Installation of electronic markers shall be in accordance with the following:

   a. One marker at all changes in horizontal alignment.

      (1) Tees with branches 4-inches and larger
      (2) Bends
      (3) Deflection couplings
      (4) Deflections at joints

   b. One marker 10 feet prior to and one marker 10 feet after a change in horizontal alignment unless markers are required within the 10 feet distance.

c. On straight runs, markers shall be placed at a maximum distance of 40 feet.

d. One marker at the end of all mains.

e. Markers at the beginning and end of all concrete jackets.

f. Markers at the beginning and end of all sections of mains under concrete pavement.

g. One marker at the connection of the new main to the existing main.

h. Markers shall not be placed at crossings with electrical duct lines, gas lines or telephone duct lines. Install markers at a minimum clearance of 5 feet from these utility crossings.

3. Testing

Contractor shall test the electronic markers prior to installation to verify proper operation. BWS personnel shall verify the number and locations of placed electronic markers prior to final paving.

17.4 PAYMENT

Payment for ELECTRONIC MARKERS will be made at the Unit Price Bid based on the actual amount installed.

The Unit Price Bid for ELECTRONIC MARKERS shall be full compensation for all labor, materials, tools and equipment necessary for furnishing and installing ELECTRONIC MARKERS and all other incidentals required to complete the work.

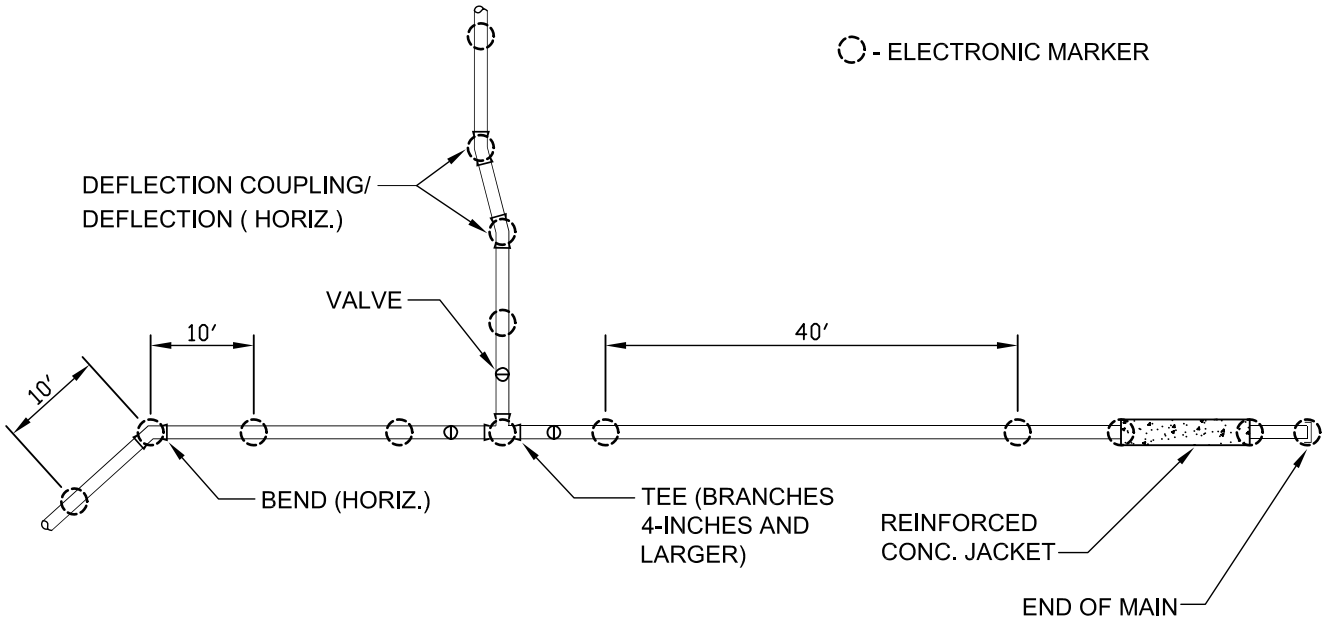

PLAN VIEW

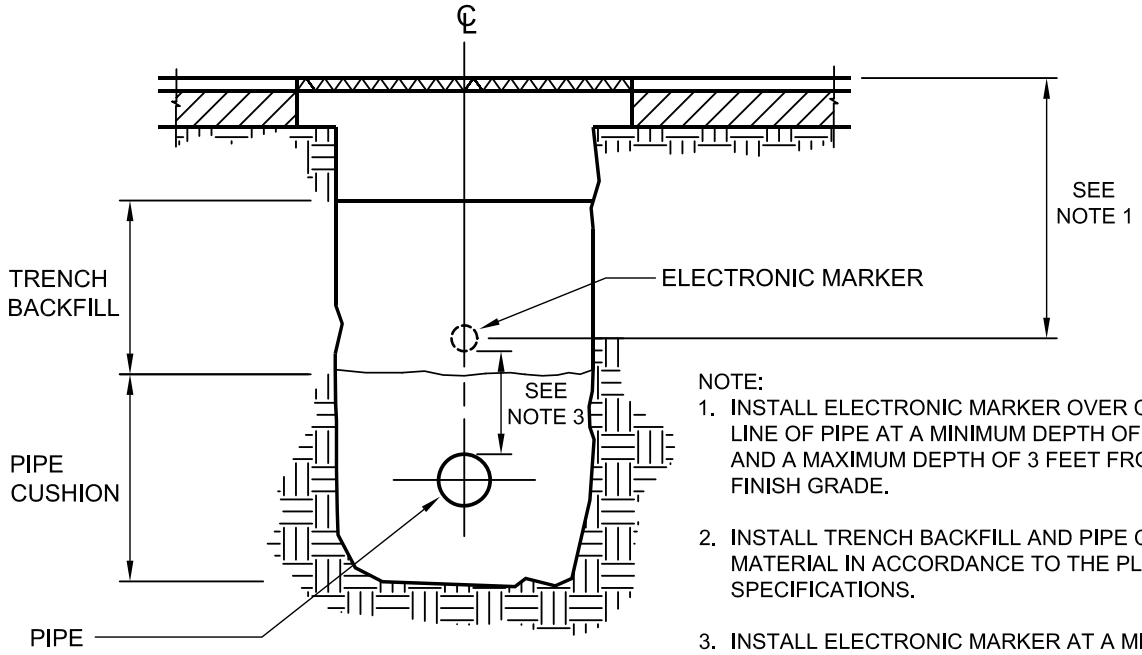

NOTE:

1. INSTALL ELECTRONIC MARKER OVER CENTER LINE OF PIPE AT A MINIMUM DEPTH OF 2 FEET AND A MAXIMUM DEPTH OF 3 FEET FROM FINISH GRADE.
2. INSTALL TRENCH BACKFILL AND PIPE CUSHION MATERIAL IN ACCORDANCE TO THE PLANS AND SPECIFICATIONS.
3. INSTALL ELECTRONIC MARKER AT A MINIMUM CLEARANCE OF 6-INCHES ABOVE THE PIPE OR CONCRETE JACKET.

SECTION VIEW

TYPICAL ELECTRONIC MARKER INSTALLATION

N.T.S.

DC

BOARD OF WATER SUPPLY

CITY AND COUNTY OF HONOLULU
630 SOUTH BERETANIA STREET
HONOLULU, HI 96843

JEREMY HARRIS, Mayor

EDDIE FLORES, JR., Chairman
CHARLES A. STED, Vice-Chairman
JAN M.L.Y. AMII
HERBERT S.K. KAOPUA, SR.
DAROLYN H. LENDIO

RODNEY K. HARAGA, Ex-Officio
LARRY J. LEOPARDI, Ex-Officio

CLIFFORD S. JAMILE
Manager and Chief Engineer

DONNA FAY K. KIYOSAKI
Deputy Manager and Chief Engineer

January 27, 2004

Mr. Dennis R. Yoshimura
Independent Dealer Group
575 Cooke Street, Suite 2606
Honolulu, Hawaii 96813

Dear Mr. Yoshimura

Subject: Your Letter Dated October 2, 2003 Requesting Approval of Pratt & Lambert Products

We approve the following paint schedules for inclusion in the water system standards:

A. NEW SCHEDULE FOR NEW SURFACES	PAINT SCHEDULE
1. Ferrous Metals (Interior and Exterior)	Prime: 1 coat Poxy-Gard HB Aluminum Mastic S3508 (5.0-10.0 mils DFT). Prime: 1 coat Poxy-Gard HB Expoy Mastic S3500 series (5.0-10.0 mils DFT). Top Coat Enduthane HB Acrylic Urethane S2800 series (3.00-4.0 mils DFT).
2. Galvanized Metals (Interior and Exterior)	Prime: 1 coat Z1 Latex Wash Primer 1.0 mil DFT Top Coat Enduthane HB Acrylic Urethane S2800 series (3.0-4.0 mils DFT)
4. Aluminum Surfaces	Prime: 1 coat Z1 Latex Wash Primer 1.0 mil DFT Top Coat Enduthane HB Acrylic Urethane S2800 series (3.0-4.0 mils DFT)
11. Wood, Other than Mahogany or Hardwood (Interior)	Prime: Interior Oil Primer S8161 (1.7-mils DFT)

	Two coats Pro-Hide Gold Interior Alkyd S/gloss S8800 (2.1-mils DFT)
	Two coats Red Seal Interior Oil Satin Enamel S5700 series (2.1-mils DFT)
12. Mahogany & Hardwood (Interior)	One coat Tonetic Wood Stain (if desired)
	One or two coats Varmor Urethane Clear finish R10 gloss

B. PAINT SCHEDULE FOR EXISTING SURFACES	PAINT SCHEDULE
2. Existing Concrete, Masonry and Plaster (Exterior)	Prime: Pro-Hide Gold Int./Ext. Acrylic Concrete & Stucco Primer Z6300 (3.2-mils DFT)
	Two coats Red Seal Ext. Latex Flat Z1900 series (1.2 DFT per coat)
3. Existing Concrete, Masonry & Plaster (Reservoir Exterior)	Prime: Exterior Acrylic & Stucco Primer Z6300 (3.2-mils DFT)
	Two coats Pro-Hide Gold Exterior S/gloss Z8600 series (1.4-milsDFT)

We disapprove the following paint schedules:

A. NEW SCHEDULE FOR NEW SURFACES	PAINT SCHEDULE
6. Masonry Surfaces (Exterior)	Prime: Pro-Hide Silver Heavy Duty Block Filler Z8465 (50-80 sq. ft. per gallon)
	Topcoat: 2 coats Pro-Hide Gold Exterior latex Flat Z8400 series (1.2 mils DFT per coat)
7. Masonry Surfaces (Interior)	Prime: Pro-Hide Silver Heavy Duty Block Filler Z8465 (50-80 sq. ft. per gallon)
	Two coats Tech-Gard Water Borne Epoxy Z5300 series (1.5-2.0 mils DFT per coat)

8. Concrete Surfaces (Exterior)	Prime: Pro-Hide Silver Heavy Duty Block Filler Z8465 (50-80 sq. ft. per gallon) Top coat Pro-Hide Gold Exterior latex Flat Z8400 series (1.2 mils DFT per coat)
9. Concrete Surfaces (Interior)	Prime: Pro-Hide Silver Heavy Duty Latex Block Filler Z8465 (50-80 sq. ft. per gallon) Two coats Tech-Gard Water Borne Epoxy Z5300 series (1.5-2.0 mils DFT)
10. Wood (Exterior)	Prime: Pro-Hide Gold Exterior Alkyd Wood Primer Z8460 (1.1-mils DFT) Two coats Enducryl DDTM Z2900 Series 1.5-2.0 Series (1.5 -2.0 DFT)

B. PAINT SCHEDULE FOR EXISTING SURFACES	PAINT SCHEDULE
1. Ferrous Metal Items (Interior and Exterior-Rust Retained)	Prime: Poxy-Gard rust Inhibitive Epoxy Primer S3301 series (3.0-6.0 mils DFT) Topcoat Enduthane HB Urethane S2800 series (4.0-6.0-mils DFT)

If you have any questions, contact Jason Takaki at 748-5740.

Very truly yours,

HOWARD H. TANAKA, Head
Maintenance Unit – Engineering Branch

Enclosure
cc: Hawaii, Kauai, Maui Water Departments
Maintenance-Field, F. Fung, Darwin Ching, J. Takaki GS:st

BOARD OF WATER SUPPLY

CITY AND COUNTY OF HONOLULU
630 SOUTH BERETANIA STREET
HONOLULU, HI 96843

JEREMY HARRIS, Mayor

EDDIE FLORES, JR., Chairman
CHARLES A. STED, Vice-Chairman
JAN M.L.Y. AMII
HERBERT S.K. KAOPUA, SR.
DAROLYN H. LENDIO

RODNEY K. HARAGA, Ex-Officio
LARRY J. LEOPARDI, Ex-Officio

CLIFFORD S. JAMILE
Manager and Chief Engineer

DONNA FAY K. KIYOSAKI
Deputy Manager and Chief Engineer

October 15, 2003

TO: WHOM IT MAY CONCERN

FROM: CLIFFORD S. JAMILE

SUBJECT: REVISION TO THE WATER SYSTEM EXTERNAL CORROSION CONTROL STANDARDS, VOLUME 3, DATED 1991

Effective January 1, 2004, the Board of Water Supply (BWS) will require the installation of cathodic protection systems in conjunction with all installations of ductile iron pipes, unless otherwise directed by the Manager. The requirements of Part 2, Section 1.2, Table 3 "Exterior Corrosion Control Requirements" will be revised to eliminate the corrosion rating based on the soil resistivity. The corrosion control requirements for ductile iron pipe installation shall be designed to a corrosion rating of 1. Construction plans with ductile iron pipe installations submitted to the BWS for review and approval prior to January 1, 2004, shall not require cathodic protection system unless otherwise instructed.

If you have any questions, please contact Jason Takaki at 748-5740.

cc: Kauai, Maui, Hawaii Water Departments

Customer Care
Maintenance-Field
D. Ching
F. Fung
J. Takaki

MD:st

BOARD OF WATER SUPPLY

CITY AND COUNTY OF HONOLULU
630 SOUTH BERETANIA STREET
HONOLULU, HI 96843

JEREMY HARRIS, Mayor

EDDIE FLORES, JR., Chairman
CHARLES A. STED, Vice-Chairman
JAN M.L.Y. AMII
HERBERT S.K. KAOPUA, SR.
DAROLYN H. LENDIO

RODNEY K. HARAGA, Ex-Officio
LARRY J. LEOPARDI, Ex-Officio

CLIFFORD S. JAMILE
Manager and Chief Engineer

DONNA FAY K. KIYOSAKI
Deputy Manager and Chief Engineer

August 12, 2003

Mr. Calvin Okinaka, Branch Manager
Fluid Systems Hawaii, Inc.
96-1407 Waihona Place
Pearl City, Hawaii 96782

Dear Mr. Okinaka:

Subject: Your Letter Dated April 10, 2003 Requesting Approval of Corrosion Resistant Coated Cor-Ten T-Bolts and Nuts

We approve the Cor-Ten T-bolts and nuts with corrosion resistant Tripac 2000 Blue Coating System by Tripac Fasteners, and the Cor-Blue T-bolts by NSS Industries for inclusion into the Water System Standards. The Tripac 2000 Blue coated Cor-Ten T-bolts and nuts and Cor-Blue T-bolts and nuts shall be used for underground mechanical joint installations.

If you have any questions, please contact Jason Takaki at (808)748-5740.

Very truly yours,

HOWARD H. TANAKA, Head
Maintenance Unit - Engineering

cc: County Depts. of Water
Maintenance Unit - Field
F. Fung
G. Matsunami
J. Takaki

FA:es

JT

BOARD OF WATER SUPPLY

CITY AND COUNTY OF HONOLULU
630 SOUTH BERETANIA STREET
HONOLULU, HI 96843

JEREMY HARRIS, Mayor

EDDIE FLORES, JR., Chairman
CHARLES A. STED, Vice-Chairman
JAN M.L.Y. AMII
HERBERT S.K. KAOPUA, SR.
DAROLYN H. LENDIO

RODNEY K. HARAGA, Ex-Officio
LARRY J. LEOPARDI, Ex-Officio

CLIFFORD S. JAMILE
Manager and Chief Engineer

DONNA FAY K. KIYOSAKI
Deputy Manager and Chief Engineer

July 22, 2003

TO: WHOM IT MAY CONCERN

FROM: CLIFFORD S. JAMILE, MANAGER AND CHIEF ENGINEER
BOARD OF WATER SUPPLY

SUBJECT: WATER SYSTEM STANDARD AMENDMENT FOR NUTS AND BOLTS

Effective immediately, the Board of Water Supply (BWS) will allow the use of corrosion resistant coated Cor-Ten® T-Bolts and Nuts for underground mechanical joint installations in lieu of Type 316 stainless steel bolts and nuts as required in Division 200, Section 202.02, Mechanical Joint, of the 2002 Water System Standards (WSS). Until an amendment to the WSS Division 400, Section 402, Approved Material List, is approved to include Cor-Ten® T-Bolts and Nuts, material approvals shall be on a case-by-case basis. Materials shall be submitted to the BWS (Attn: Howard Tanaka) for review and approval.

If you have any questions, please contact Jason Takaki at 748-5740.

cc: Kauai, Maui, Hawaii Water Departments
Customer Care (J. Kaakua)
Maintenance-Field
G. Matsunami
F. Fung
J. Takaki

FA/JT:st

JT

BOARD OF WATER SUPPLY

CITY AND COUNTY OF HONOLULU
630 SOUTH BERETANIA STREET
HONOLULU, HI 96843

JEREMY HARRIS, Mayor

EDDIE FLORES, JR., Chairman
CHARLES A. STED, Vice-Chairman
JAN M.L.Y. AMII
HERBERT S.K. KAOPUA, SR.
DAROLYN H. LENDIO

RODNEY K. HARAGA, Ex-Officio
LARRY J. LEOPARDI, Ex-Officio

CLIFFORD S. JAMILE
Manager and Chief Engineer

DONNA FAY K. KIYOSAKI
Deputy Manager and Chief Engineer

June 20, 2003

Mr. Joshua James Larkin
Romac Industries, Inc.
21919 20th Avenue SE, Suite 100
Bothell, Washington 98021

Dear Mr. Larkin:

Subject: Your Letter Dated April 15, 2003 Requesting Approval of Romac Style DJ 400 Ductile Iron Dismantling Joints

The Romac Style DJ 400 Ductile Iron Dismantling Joints, sizes 16-inch and larger are approved for inclusion into the Water System Standards.

If you have any questions, please contact Jason Takaki at (808)748-5741.

Very truly yours,

HOWARD H. TANAKA, Head
Maintenance Unit – Engineering

cc: County Departments of Water

Maint. Field, F. Fung, G. Matsunami, J. Takaki
FA:st

Supp

BOARD OF WATER SUPPLY

CITY AND COUNTY OF HONOLULU
630 SOUTH BERETANIA STREET
HONOLULU, HI 96843

JEREMY HARRIS, Mayor

EDDIE FLORES, JR., Chairman
CHARLES A. STED, Vice-Chairman
JAN M.L.Y. AMII
HERBERT S.K. KAOPUA, SR.
DAROLYN H. LENDIO

RODNEY K. HARAGA, Ex-Officio
LARRY J. LEOPARDI, Ex-Officio

CLIFFORD S. JAMILE
Manager and Chief Engineer

DONNA FAY K. KIYOSAKI
Deputy Manager and Chief Engineer

May 23, 2003

Mr. John Miller
The Sherwin-Williams Company
1311 Kalani Street
Honolulu, Hawaii 96817

Dear Mr. Miller:

Subject: Your Letter Dated December 23, 2002 Requesting Approval of Sherwin Williams Coatings

We approve the following Sherwin Williams paint schedules for inclusion in the Water System Standards:

A. NEW SURFACES	PAINT SCHEDULES
1. Ferrous Metals (Int. and Ext.)	Prime Coat: 1 coat Zinc Clad II HS (B69VZ3) @ 3-5 mils DFT Intermediate: 1 coat Macropoxy 646 Fast Cure (B58-600 Series) @ 5-10 mils DFT Finish Coat: 1 coat Hi-solids Polyurethane (B65-300 Series) @ 3-4 mils DFT
2. Galvanized Metals (Int. and Ext.)	Prime Coat: 1 coat DTM Wash Primer (B71Y1) @ 0.7-1.3 mils DFT Finish Coat: 1 coat Acrolon 218 HS Acrylic Polyurethan (B65-600 Series) @ 3-6 mils DFT
3. Factory Finished Metals (Int. & Ext.)	Prime Coat: 1 coat W.B. Tile Clad Epoxy Primer (B73A200 Series) @ 2-4 Mils DFT Finish Coat: 1 coat Centurion WB Urethane (B65-700 Series) @ 2-3 mils DFT, **or** 1 COAT Macropoxy HS (B58-400 Series) @ 3-6 mils DFT (B58-400 Series)
4. Aluminum Surfaces	Prime 1 coat: DTM Wash Primer (B71Y1) @ 0.7-1.3 mils DFT Finish Coat: 1 coat Corothane II Polyurethane (B65-200/400 Series) @ 2-4 mils DFT

5. Masonry Surfaces (Exterior)	Prime Coat: 1 coat Loxon Masonry Primer (A24 Series) @ 2.5-3.2 mils DFT. Finish Coat: 2 coats DTM Acrylic (B66 Series) @ 2.5-4 mils DFT
6. Masonry Surfaces (Interior)	Prime Coat: 1 coat Loxon Masonry Primer (A24 Series) @ 2.5-3.2 mils DFT. Finish Coat: 2 coats DTM Acrylic (B66 Series) @ 2.5-4 mils DFT
7. Concrete Surfaces (Exterior)	Prime Coat: 1 coat Loxon Block Surfacer (A24 Series) @ 2.5-3.2 mils DFT Finish Coat: 2 coats DTM Acrylic (B66 Series) @ 2.5-4 mils DFT, **or** 2 coats W.B. Tile Clad Epoxy Finish (B73W111 Series) @ 2-4 Mils DFT
8. Concrete Surfaces (Interior)	Prime Coat: 1 coat Loxon Block Surfaces (A24 Series) @ 2.5-3.2 mils DFT Finish Coat: 2 coats DTM Acrylic (B66 Series) @ 2.5-4 mils DFT, **or** 2 coats W.B. Tiile Clad Epoxy Finish (B73W111 Series) @ 2-4 Mils DFT
9. Wood (Exterior)	Prime Coat: 1 coat A100 Alkyd Primer (Y24 Series) @ 2.3 mils DFT Finish Coat: 2 coats A100 Latex (A6, A82, A8 Series) @ 1.2 mils DFT, **or** 2 coats DTM Acrylic (B66 Series) @ 2.5-4 mils DFT
10. Wood Other than Mahogany (Int.)	Prime Coat: 1 coat PreRite Classic Int. Ltx. Primer (B28W101) @ 1.6 mils DFT Finish Coat: 2 coats ProMar 200 Int. Ltx. Semi-Gloss (B31-200) @ 1.4 mils DFT
11. Mahogany (Interior Only)	Prime Coat: 1 coat Wood Classic Stain (A49 Series) Finish Coat: 2 coats Wood Classic Polyurethane (A67 Series) @ 1.7 mils DFT

B. EXISTING SURFACES	PAINT SCHEDULE
1. Ferrous Metals (Interior & Exterior Rust Retained)	Prime Coat: 1 coat Macropoxy 920 PrePrime (B58T101) @ 1.5-2 mils DFT Finish Coat: 1 coat HS Polyurethane (B65-300 Series) @ 3-4 mils DFT
2. Concrete, Masonry, and Plaster (Exterior)	Prime Coat: WB Catalyzed Epoxy Ultradeep (B70200 Series) @ 2.5-3 mils DFT Finish Coat: 2 coats A100 Ltx Acrylic (A6, A8, A82 Series) @ 1.2 mils DFT, **or** 2 coats DTM Acrylic (B66 Series) @ 2.4 mils DFT
3. Concrete, Masonry, and Plaster (Reservoir Exterior)	Prime Coat: WB Catalyzed Epoxy Ultradeep (B70-200 Series) @ 2.5-3 mils DFT Finish Coat: 2 coats A100 Ltx Acrylic (A6, A8, A82 Series) @ 1.2 mils DFT **or** 2 coats DTM Acrylic (B66 Series) @ 2.4 mils DFT

We disapprove the treatment for reservoir interiors. The Board of Water supply does not paint the interior of its reservoirs as a standard practice.

If you have any questions, please contact Jason Takaki at 748-5741.

Very truly yours,

Howard H. Tanaka

HOWARD H. TANAKA, Head
Maintenance Unit – Engineering

cc: Hawaii, Kauai, and Maui Water Departments
Maintenance – Field
G. Matsunami
F. Fung
Support Section

FA:em

Support

BOARD OF WATER SUPPLY

CITY AND COUNTY OF HONOLULU
630 SOUTH BERETANIA STREET
HONOLULU, HI 96843

JEREMY HARRIS, Mayor

EDDIE FLORES, JR., Chairman
CHARLES A. STED, Vice-Chairman
JAN M.L.Y. AMII
HERBERT S.K. KAOPUA, SR.
DAROLYN H. LENDIO

RODNEY K. HARAGA, Ex-Officio
LARRY J. LEOPARDI, Ex-Officio

CLIFFORD S. JAMILE
Manager and Chief Engineer

DONNA FAY K. KIYOSAKI
Deputy Manager and Chief Engineer

May 12, 2003

Mr. Teddy Pascual
FSC Coatings, Inc.
5360 Eastgate Mall Road, Suite F
San Diego, California 92121

Dear Mr. Pascual:

Subject: Your Letter Dated January 24, 2003 Requesting Approval of FSC High Performance Coatings

We approve the following paint schedules for inclusion in the water system standards:

A. NEW SURFACES		PAINT SCHEDULE
1.	Ferrous Metals (Int. and Ext.)	Prime Coat: Zero-Rust Modified Phenolic Primer – Black (2.5 – 3.0 mils DFT) Intermediate: Zero-Rust Modified Phenolic Primer – Red (2.5 –3.0 mils DFT) Finish Coat: Silicone Polyplus Topcoat (Int.) (3.0 mils DFT). Silicone Polyplus Ultimate UV (Ext.) (3.0 mils DFT).
2.	Galvanized Metals (Int. and Ext.)	Prep: Zero-Rust Prep Step Concentrate. Prime Coat: Zero-Rust Modified Phenolic Primer – Black (2.5 – 3.0 mils DFT) Intermediate: Zero-Rust Modified Phenolic Primer – Red (2.5 –3.0 mils DFT) Finish Coat: Silicone Polyplus Topcoat (Int.) (3.0 mils DFT). Silicone Polyplus Ultimate UV (Ext.) (3.0 mils DFT).

3.	Factory Finished Metals (Int. & Ext.)	Prep: Zero-Rust Prep Step Concentrate. Prime Coat: Zero-Rust Modified Phenolic Primer – Black (2.5 – 3.0 mils DFT) Finish Coat: Silicone Polyplus Topcoat (Int.) (3.0 mils DFT). Silicone Polyplus Ultimate UV (Ext.) (3.0 mils DFT).
4.	Aluminum Surfaces	Prep: FSC Wax and Grease Remover Prime Coat: Zero-Rust Modified Phenolic Primer – Black (2.5 – 3.0 mils DFT) Finish Coat: Silicone Polyplus Topcoat (Int.) (3.0 mils DFT).
5.	Masonry Surfaces (Exterior)	Prime Coat: FSC Mildew Sealer Intermediate: Maxlife 2400 Series/2800 Series. Finish Coat: Maxlife 2400 Series/2800 Series.
6.	Masonry Surfaces (Interior)	Prime Coat: FSC Prime and Seal. Intermediate: Maxlife 2400 Series/2800 Series. Finish Coat: Maxlife 2400 Series/2800 Series.
7.	Concrete Surfaces (Exterior)	Prime Coat: FSC Mildew Sealer Intermediate: Maxlife 2400 Series/2800 Series. Finish Coat: Maxlife 2400 Series/2800 Series.
8.	Concrete Surfaces (Interior)	Prime Coat: FSC Prime and Seal. Intermediate: Maxlife 2400 Series/2800 Series. Finish Coat: Maxlife 2400 Series/2800 Series.
9.	Wood (Exterior)	Prime Coat: Silicone Polyplus (1.5 – 2.0 mils DFT) Intermediate: Silicone Polyplus (1.5 – 2.0 mils DFT) Finish Coat: Silicone Polyplus Topcoat Ultimate UV (3.0 mils DFT)
10.	Wood Other than Mahogany (Int.)	Prime Coat: Silicone Polyplus (1.5 – 2.0 mils DFT) Intermediate: Silicone Polyplus (1.5 – 2.0 mils DFT) Finish Coat: Silicone Polyplus Topcoat (3.0 mils DFT)
11.	Mahogany (Interior Only)	Prime Coat: TWP 300 Series/400Series Finish Coat: FSC Quick Dry Varnish

B. EXISTING SURFACES

1.	Ferrous Metals (Interior & Exterior Rust Retained)	Prime Coat: Zero-Rust Modified Phenolic Primer – (2.5 mils DFT) Intermediate: Zero-Rust Modified Phenolic Primer – (2.5 mils DFT) Finish Coat: Silicone Polyplus Topcoat (Int.) (3.0 mils DFT). Silicone Polyplus Ultimate UV (Ext.) (3.0 mils DFT).
2.	Concrete, Masonry, and Plaster (Exterior)	Prep: Silox-Seal Part "A" Prime Coat: FSC Modified Mildew Sealer Intermediate: Maxlife Series PC550 Finish Coat: Maxlife Series PC550
3.	Concrete, Masonry and Plaster (Reservoir Exterior)	Prep: Silox-Seal Part "A" Prime Coat: FSC Modified Mildew Sealer Intermediate: Maxlife Series PC550 Finish Coat: Maxlife Series PC550

We disapprove the Anti-Graffiti paint schedule for use in the Water System. The Board of Water Supply does not paint the exterior of its facilities with anti-graffiti coating at this time.

If you have any questions, contact Jason Takaki at (808) 748-5741.

Very truly yours,

HOWARD H. TANAKA, Head
Maintenance Unit - Engineering

cc: Hawaii, Kauai, and Maui Water Departments
Maint. – Field
G. Matsunami
F. Fung
Support

FA:em

BOARD OF WATER SUPPL

CITY AND COUNTY OF HONOLULU
630 SOUTH BERETANIA STREET
HONOLULU, HI 96843

JEREMY HARRIS, Mayor

EDDIE FLORES, JR., Chairman
CHARLES A. STED, Vice-Chairman
JAN M.L.Y. AMII
HERBERT S.K. KAOPUA, SR.
DAROLYN H. LENDIO

RODNEY K. HARAGA, Ex-Officio
LARRY J. LEOPARDI, Ex-Officio

CLIFFORD S. JAMILE
Manager and Chief Engineer

DONNA FAY K. KIYOSAKI
Deputy Manager and Chief Engineer

March 24, 2003

Mr. Dennis Graham
Valve Service & Supply
91-210 Olai Street
Kapolei, HI 96707

Dear Mr. Graham:

Subject: PowerSeal Transition Couplings

The following PowerSeal Transition Couplings will not be allowed for use in our water system and will be removed from the Approved Material List of the Water System Standards:

Styles 3501, 3502, 3503, 3504, 3511, and 3512.

Samples representing the current shipment of the Style 3501 couplings show casting defects at critical locations that would impair their service in the water system.

Please remove the shipment of the Style 3501 couplings completely from the Board of Water Supply yard at your own expense. We will evaluate any future approval request to use the PowerSeal Couplings in the water system once the casting problem has been resolved.

If you have any questions, contact Jason Takaki at 748-5741.

Very truly yours,

HOWARD H. TANAKA, Head
Maintenance Unit - Engineering

cc: PowerSeal
Maintenance - Field
F. Fung
G. Matsunami
J. Takaki

Suppnt

BOARD OF WATER SUPPLY

CITY AND COUNTY OF HONOLULU
630 SOUTH BERETANIA STREET
HONOLULU, HI 96843

JEREMY HARRIS, Mayor

EDDIE FLORES, JR., Chairman
CHARLES A. STED, Vice Chairman
JAN M.L.Y. AMII
HERBERT S.K. KAOPUA, SR.
DAROLYN H. LENDIO

BRIAN K. MINAAI, Ex-Officio

CLIFFORD S. JAMILE
Manager and Chief Engineer

DONNA FAY K. KIYOSAKI
Deputy Manager and Chief Engineer

November 27, 2002

Mr. John L. Hawkins
James Jones Company
4127 Temple City Boulevard
El Monte, California 91731

Dear Mr. Hawkins:

Subject: Your Letter Dated October 8, 2002 Requesting Approval of
James Jones Company's Service Saddles, Couplings and Ball Valves

We approve the following materials for inclusion into our Water System Standards:

James Jones Compression Couplings: Models J-2605, J-2607, and J-2609.

James Jones Ball Valves: Model J-1905.

James Jones Meter Coupling: Model J-130.

The Ball Valve Model J-1905, when used as property valve, should be provided with a handle that would fit inside the required Type "A" or Type "B" box.

The Service Saddle, Model J-979, has already been approved and included in the Approved Material List of the Water System Standards (Refer to enclosed approval letter dated April 8, 1987).

If you have any questions, please contact Jason Takaki at 527-6196.

Very truly yours,

Howard H. Tanaka

HOWARD H. TANAKA, Head
Maintenance Unit – Engineering

Enclosure
cc: Hawaii, Kauai, and Maui DWS

G. Matsunami, F. Fung, Support FA:st

Frank/file KK

April 8, 1987

Mr. Harry Imai
Fluid Systems Hawaii, Inc.
96-1407 Waihona Place
Pearl City, Hawaii 96782

Dear Mr. Imai:

Subject: Your Letter of March 23, 1987 Requesting Additions and Amendments to the Approved Material List of the 1985 Water System Standards

We approve the Mueller Company H-619 Tapping Valve and Sleeve for asbestos-cement pipe and James Jones J-979 Bronze Double Strap Service Saddle for ductile iron and asbestos-cement pipes for use in our water system.

Our comments regarding the rest of your fittings will be sent to you by April 30, 1987.

If you have any questions, please contact Kenneth Kawamoto at 527-6144.

Very truly yours,

Kazu Hayashida

KAZU HAYASHIDA
Manager and Chief Engineer

FI:ki

cc: K. Hayashida
Finance
Field Operations
J. Yamauchi
R. Matsui
D. Ching
~~K.~~ Kawamoto

BOARD OF WATER SUPPLY

CITY AND COUNTY OF HONOLULU
630 SOUTH BERETANIA STREET
HONOLULU, HI 96843

JEREMY HARRIS, Mayor

EDDIE FLORES, JR., Chairman
CHARLES A. STED, Vice Chairman
JAN M.L.Y. AMII
HERBERT S.K. KAOPUA, SR.
DAROLYN H. LENDIO

BRIAN K. MINAAI, Ex-Officio

CLIFFORD S. JAMILE
Manager and Chief Engineer

DONNA FAY K. KIYOSAKI
Deputy Manager and Chief Engineer

November 22, 2002

Fluid Systems Hawaii, Inc.
96-1407 Waihona Place
Pearl City, Hawaii 96782

Attention: Mr. Calvin Okinaka

Gentlemen:

Subject: Globe Valves for Property Valves

Henceforth, the Honolulu Board (BWS) of Water Supply will require the use of globe valves for property valves.

Attached is the list of approved globe valves. However, the BWS is still considering switching to ball valves with handles when a suitable design that would fit inside the Type "A" valve box is available.

If you have any questions, please contact Jason Takaki at 527-6196.

Very truly yours,

HOWARD H. TANAKA, Head
Maintenance Unit – Engineering

Enc.

FA:em

cc: Maintenance – Field
Customer Care (J. Kaakua, D. Shimizu)
F. Fung
J. Takaki
G. Matsunami
Support Section

APPROVED GLOBE VALVES FOR OAHU ONLY	
Manufacturer	Catalog or Model No.
Globe Valves	
A. 125-Pound Steam	
1. Crane Co.	Model 1, Bronze
2. Fairbanks	Model 45 & U-01
3. Hammond Valve Corp.	Model 440
4. Kennedy	Catalog 86, Model 150
5. A.Y. McDonald Mfg. Co.	Catalog PB-73, Model 9510
6. Milwaukee Valve Corp.	Catalog I172, Model 502
7. Nibco	T-211-B
8. Ohio Brass Co.	Catalog 58, Models 101, 30I-T
9. Ohio Injector Co.	Catalog 53, Model 234
10. Powell	Catalog 11, Model 650
11. Red & White Valve Co.	Catalog C/I, Model 211
12. (Stockham) Crane Co.	Catalog 57, Model B-16
	Model B-13T
13. Walworth	Catalog 52, Model 58
B. 150-Pound Steam	
1. Lunkenheimer	Catalog 66, Model 123 (No. 20 disc.)
2. Nibco	T-235

BOARD OF WATER SUPPLY

CITY AND COUNTY OF HONOLULU
630 SOUTH BERETANIA STREET
HONOLULU, HI 96843

JEREMY HARRIS, Mayor

EDDIE FLORES, JR., Chairman
CHARLES A. STED, Vice-Chairman
JAN M.L.Y. AMII
HERBERT S.K. KAOPUA, SR.

BRIAN K. MINAAI, Ex-Officio
ROSS S. SASAMURA, Ex-Officio

CLIFFORD S. JAMILE
Manager and Chief Engineer

July 11, 2002

Mr. Jose A. Casarez
Pittsburgh Paint Center
425 Kalihi Street
Honolulu, Hawaii 96819

Dear Mr. Casarez:

Subject: Your Letter Dated May 13, 2002 Requesting
Approval of PPG Industries High Performance Products

We approve the following paint schedules for inclusion in the water system standards:

A. NEW SURFACES		PAINT SCHEDULE
1.	Ferrous Metals (Int. and Ext.)	Prime Coat: PPG 95-245 PITTGUARD Direct-to-rust Epoxy Coating @ 5.0 to 7.0 mils DFT. Finish Coat: PPG 95-850 PITTHANE 35 Aliphatic Urethane Gloss Enamel @ 2.0 to 3.0 mils DFT.
2.	Galvanized Metals (Int. and Ext.)	Prime Coat: PPG 95-245 PITTGUARD Direct-to-rust Epoxy Coating @ 5.0 to 7.0 mils DFT. Finish Coat: PPG 95-850 PITTHANE 35 Aliphatic Urethane Gloss Enamel @ 2.0 to 3.0 mils DFT.
3.	Factory Finished Metals (Int. & Ext.)	Prime Coat: PPG 95-245 PITTGUARD Direct-to-rust Epoxy Coating @ 5.0 to 7.0 mils DFT. Finish Coat: PPG 95-850 PITTHANE 35 Aliphatic Urethane Gloss Enamel @ 2.0 to 3.0 mils DFT.

4.	Aluminum Surfaces	Pretreatment: In accordance with SSPC SP1 Prime Coat: PPG 95-245 PITTGUARD Direct-to-rust Epoxy Coating @ 5.0 to 7.0 mils DFT. Finish Coat: PPG 95-850 PITTHANE 35 Aliphatic Urethane Gloss Enamel @ 2.0 to 3.0 mils DFT.
5.	Masonry Surfaces (Exterior)	Prime Coat: PPG 6-7 SPEEDHIDE Interior/Exterior Acrylic Masonry Block Filler @ 4.8 to 14.0 mils DFT Finish Coat: Two coats PPG 78-45 SUN-PROOF Exterior 100% Acrylic Semi-Gloss House and Trim Paint @ 1.5 to 2.0 mils DFT.
6.	Concrete Surfaces (Exterior)	Prime Coat: PPG 98-46 AQUAPON WB Water Based Epoxy Primer Coating @ 3.0 to 4.0 mils DFT. Finish Coat: PPG 78-45 SUN-PROOF Exterior 100% Acrylic Semi-Gloss House and Trim Paint @ 1.5 to 2.0 mils DFT.
7.	Wood (Exterior)	Prime Coat: PPG 6-809 SPEEDHIDE Exterior Alkyd Wood Primer @ 1.5 to 2.0 mils DFT. Finish Coat: PPG 90-374 PITTECH Interior/ Exterior Waterborne DTM Industrial High Gloss Enamel @ 2.0 to 3.0 mils DFT.
8.	Mahogany (Interior Only)	Prime Coat: PPG 77-30 REZ Interior QD Wood Sanding Sealer @ .5 to 1.0 mils DFT. Finish: PPG 77-10 REZ Interior/Exterior Alkyd Spar Varnish @ 1.10 to 1.5 mils DFT.

B. EXISTING SURFACES

1.	Ferrous Metals (Interior & Exterior Rust Retained)	Prime Coat: PPG 95-245 PITTGUARD Direct-to-rust Epoxy Coating @ 5.0 to 7.0 mils DFT. Finish Coat: PPG 95-850 PITTHANE 35 Aliphatic Urethane Gloss Enamel @ 2.0 to 3.0 mils DFT.

We had previously approved the following paint schedules in the attached letter dated April 9, 2002:

A. NEW SURFACES		PAINT SCHEDULE
1.	Masonry Surfaces Interior	Prime Coat: PPG 16-90 PITT-GLAZE Interior/Exterior Acrylic Block Filler @ 12.0 to 25.0 mils DFT. Finish Coat: Two coats PPG 98-1 AQUAPON Waterborne Polyamide Epoxy @ 2.0 to 3.0 mils DFT.
2.	Concrete Surfaces (Interior)	Prime Coat: PPG 16-90 PITT-GLAZE Interior/Exterior Acrylic Block Filler @ 12.0 to 25.0 mils DFT. Finish Coat: Two coats PPG 98-1 AQUAPON Waterborne Polyamide Epoxy @ 2.0 to 3.0 mils DFT.
3.	Wood Other than Mahogany (Int.)	Prime Coat: PPG 6-6 SPEEDHIDE Interior Alkyd Enamel Undercoater @ 1.8 to 2.2 mils DFT. Finish Coat: Two coats PPG 6-1110 SPEEDHIDE Interior Semi-Gloss Alkyd Enamel @ 1.8 to 2.2 mils DFT.

B. EXISTING SURFACES

1.	Concrete, Masonry, and Plaster (Exterior)	Prime Coat: PPG 6-603 SPEEDHIDE Interior/ Exterior Acrylic Alkali Resistant Primer @ 1.2 to 1.5 mils DFT. Finish Coat: Two coats PPG 6-900 SPEEDHIDE Exterior Semi-Gloss Latex @ 1.2 to 1.5 mils DFT.

2.	Concrete, Masonry and Plaster (Reservoir Exterior)	Prime Coat: PPG 6-603 SPEEDHIDE Interior/ Exterior Acrylic Alkali Resistant Primer @ 1.2 to 1.5 mils DFT. Finish Coat: Two coats PPG 6-900 SPEEDHIDE Exterior Semi-Gloss Latex @ 1.2 to 1.5 mils DFT.

As stated in our letter of April 9, 2002, we disapprove the paint schedules for Concrete Reservoir (Interior) and Anti-Graffiti. As standard practice, we do not paint the interior of reservoirs or the exterior of our facilities with anti-graffiti coatings at this time.

If you have any questions, contact Jason Takaki at 527-6196.

Very truly yours,

Howard H. Tanaka

HOWARD H. TANAKA, Head
Maintenance Unit - Engineering

Enclosure (Letter dated 4/9/02)

cc: Hawaii, Kauai, and Maui Water Departments
Maintenance - Field
G. Matsunami
F. Fung
Support

BOARD OF WATER SUPPLY

CITY AND COUNTY OF HONOLULU
630 SOUTH BERETANIA STREET
HONOLULU, HI 96843

JEREMY HARRIS, Mayor

EDDIE FLORES, JR., Chairman
CHARLES A. STED, Vice-Chairman
JAN M.L.Y. AMII
HERBERT S.K. KAOPUA, SR.

BRIAN K. MINAAI, Ex-Officio
ROSS S. SASAMURA, Ex-Officio

CLIFFORD S. JAMILE
Manager and Chief Engineer

April 9, 2002

Mr. Dan Davis
PPG Industries, Inc.
24832 San Doval Lane
Mission, Viejo, CA 92691

Dear Mr. Davis:

Subject: Your Letter Dated November 2, 2001 Requesting
Approval of PPG Industries High Performance Coatings

We approve the following paint schedules for inclusion into the Water System Standards:

1. Paint Schedule for New Surfaces
   a. Schedule 7 – Masonry Surfaces: (Interior)
   b. Schedule 9 – Concrete Surfaces: (Interior)
   c. Schedule 11 – Wood, Other than Mahogany or Hardwood: (Interior)

2. Paint Schedule for Existing Surfaces
   a. Schedule 2 – Existing Concrete, Masonry and Plaster: (Exterior)
   b. Schedule 3 – Existing Concrete, Masonry and Plaster: (Reservoir Exterior)

We disapprove the following paint schedules:

1. Paint Schedule for New Surfaces
   a. Schedule 5 – Overflow Pipe. The paint specified is not recommended for use for potable water.
   b. Schedule 13 – Concrete Reservoir: (Interior). The interior of concrete reservoirs is not painted as a standard practice.

2. Remaining Paint Schedules
   a. Schedules 1, 2, 3, 4, 6, 8, 10, 12 & 14 for New Surfaces and Schedule 1 for Existing Surfaces. The Technical Data Sheets for the finish coats list a recommended primer; the prime coat selected in the paint schedules is not listed as one of the recommended primers.

If you have any questions, contact Jason Takaki at (808)527-6196.

Very truly yours,

HOWARD H. TANAKA, Head
Maintenance Unit - Engineering

FOREWORD

DEFINITIONS

When used in these standards or elsewhere in the contract, the following terms, or pronouns used in place of them, shall have the meaning ascribed to them in this section, unless it is apparent from the context that a different meaning is intended:

The term Board or Commission shall mean the members of the Board or Commission of Water Supply of the various island water jurisdictions in the State of Hawaii.

The term Contract shall mean the written agreement covering the construction of the project by the Contractor, including the furnishing of labor, materials and equipment in connection therewith. It shall include the notice to contractors, the bid, wage schedule, list of subcontractors, the award, the special provisions, the plans, the specifications, the bond, any addendum and any written order. It shall also include all amendments to the contract by supplemental agreement thereto in writing.

The term Contractor shall mean the party (individual, corporation, joint venture, or partnership) who has entered into the contract with the Department of Water Supply.

The term County shall mean the City and County of Honolulu, County of Hawaii, County of Kauai, or the County of Maui.

The term Engineer shall mean the person or firm who is responsible for the design of the project and who prepared the plans.

The term "Kauai", "Oahu", "Maui", or "Hawaii" shall mean the Department of Water Supply of the respective island water jurisdictions in the State of Hawaii.

The term Mains shall mean water pipelines within the City/County water system, to include Transmission Mains (from its source or storage to the distribution system) and Distribution Mains.

The term Manager shall mean the Manager, Director, or Manager and Chief Engineer of the Department of Water Supply or his authorized representative.

The term Owner or Department shall mean the Department of Water Supply of the various island water jurisdictions in the State of Hawaii.

The term Project shall mean the structure or improvements to be constructed in whole or in part through the performance of this contract.

The term State shall mean the State of Hawaii.

The term Work shall mean all equipment, materials, operations and incidental activities necessary for the completion of any part or all of the project.

SCOPE

This publication shall govern the design and construction of water system facilities under the jurisdiction of the Water Departments of the various counties in the State of Hawaii.

Requirements peculiar to each Department are reflected in these standards by tables and special notes. Also certain features of water system installations which do not readily lend themselves to standardization but are designed and installed according to the special requirements applying to each case shall be subject to special review and approval of the Manager.

Any feature of design, materials to be installed, or construction methods to be used for any installation within the scope of the Water System Standards, but not specifically described herein, shall be of good quality, according to accepted practice, and shall meet with the approval of the Manager.

The Water System Standards are subdivided as follows:

Foreword	
Division 100	Planning
Division 200	Materials
Division 300	Construction
Division 400	Approved Material List and Standard Details
Division 500	Volume 3 External Corrosion Control Standards (Not applicable for Hawaii and Kauai). Refer to the “WATER SYSTEM EXTERNAL CORROSION CONTROL STANDARDS”, VOLUME 3, DATED 1991 and all subsequent amendments and additions (under separate cover and not included in these standards)

The "HAWAII ADMINISTRATIVE RULES, TITLE 3", Department of Accounting and General Services, is by reference incorporated herein and made part of these "Water System Standards". The term "HAR" used in these "Water System Standards" refers to the "HAWAII ADMINISTRATIVE RULES, TITLE 3".

For the **Department of Water Supply, County of Hawaii**, the "GENERAL REQUIREMENTS AND COVENANTS FOR THE DEPARTMENT OF WATER SUPPLY, COUNTY OF HAWAII" is by reference incorporated herein and made a part of these "WATER SYSTEM STANDARDS."

For the **Department of Water, County of Kauai**, the "GENERAL PROVISIONS FOR CONSTRUCTION CONTRACTS OF THE DEPARTMENT OF WATER, COUNTY OF KAUAI" is by reference incorporated herein and made a part of these "WATER SYSTEM STANDARDS."

For the **Department of Water Supply, County of Maui**, the "GENERAL CONDITIONS FOR FORMAL CONSTRUCTION BIDS FOR THE COUNTY OF MAUI" is by reference incorporated herein and made a part of these "WATER SYSTEM STANDARDS."

For the **Board of Water Supply, City and County of Honolulu**, the “GENERAL INSTRUCTIONS TO BIDDERS” of the City and County of Honolulu, Department of Budget and Fiscal Services, City and County of Honolulu, revised July 1999, and the “GENERAL CONDITIONS OF CONSTRUCTION CONTRACTS OF THE CITY AND COUNTY OF HONOLULU,” Department of Budget and Fiscal Services, revised July 1999, are by reference incorporated herein and made a part of these “WATER SYSTEM STANDARDS”.

CONFORMITY AND USE

All design and construction within the scope of the Water System Standards shall be in accordance with the requirements herein, unless specifically modified or required otherwise by the Manager.

Any statement on the plans and specifications requiring materials and construction to be in accordance with the Water System Standards shall have the effect of incorporating all the provisions of the Standards.

AMENDMENTS

The Manager has the authority to make changes to the Water System Standards based on the latest engineering, technology, practices and requirements.

Where official changes, additions, or amendments to the Water System Standards are made, printed copies thereof will be made available to interested parties at the offices of the Water Departments.

Official changes, additions or amendments to the Water System Standards in effect on the date of invitation for bids form a part of the Water System Standards.

REFERENCE SPECIFICATIONS

When reference is made to known standard specifications, the most recently adopted and published edition of such specifications on the date of the notice to bidders is contemplated, unless otherwise specified.

ABBREVIATIONS

The following abbreviations shall refer to the technical society, organization, body, code, rules or standards, listed opposite each abbreviation:

ABBREV.	DESCRIPTION
AASHTO	American Association of State Highway & Transportation Officials
AC	Asphaltic Concrete
ACI	American Concrete Institute
Ag	Gross Area
AG	Air Gap
AISC	American Institute of Steel Construction
ANSI	American National Standards Institute
ARV	Air Relief Valve
As	Area of Steel
ASTM	American Society for Testing & Materials
AWWA	American Water Works Association
AWS	American Welding Society
B	Bell End
B&S	Bell & Spigot
BWG	Birmingham Wire
BFP	Backflow Preventer
BFV	Butterfly Valve
BGGV	Bevel Geared Gate Valve
BOT	Bottom
BV	Butterfly Valve
BW	Both Ways
BWS	Board of Water Supply
C X C	Copper to Copper
CI	Cast Iron

ABBREV.	DESCRIPTION
CIH	Certified Industrial Hygienist
CIP	Cast Iron Pipe, Cast-In-Place
CC	Compression Coupling
CCP	Concrete Cylinder Pipe
CIRC	Circular
CL	Class
CLR	Clearance, Clear
CMU	Concrete Masonry Unit
COMP FLG	Companion Flange
COMP METER	Compound Meter
CONC	Concrete
CONC BLK.	Concrete Block
CONT	Continuous
DI	Ductile Iron
DC BFP	Double Check Backflow Preventer
DC METER	Detector Check Meter
DCV	Double Check Valve
DFT	Dry Film Thickness
DIA	Diameter
DIAG	Diagonal
DLNR	Department of Land and Natural Resources
DOT	Department of Transportation
DPP	Department of Planning and Permitting

ABBREV.	DESCRIPTION
DPW	Standard Details and Standard Specification for Public Works Construction, Department of Public Works, Kauai, Hawaii, Maui, Oahu
DR	Diameter to Thickness Ratio, Wall Thickness Dimension Ratio
DWS	Department of Water Supply
EA	Each
EF	Each Face
EPA	Environmental Protection Agency
EQ	Equal
ES	Each Side
EW	Each Way
F	Flanged
FB	Flat Bar
FCCCHR/ USC	Foundation for Cross-Connection Control and Hydraulic Research/University of Southern California
FE	Flanged End
FDA	Food and Drug Administration
FE X MJ	Flanged End by Mechanical Joint
FH	Fire Hydrant
FIN GR	Finished Grade
FIPT	Female Iron Pipe Thread
FL	Flanged
FE x B	Flanged by Bell End Pipe
FPT	Female Pipe Thread
FS	Federal Specifications
FT	Foot
FTG	Footing
GI	Galvanized Iron

ABBREV.	DESCRIPTION
GA	Gauge, Gage
GALS	Gallons
GALV	Galvanized
GPM	Gallons Per Minute
GV	Gate Valve
HAR	Hawaii Administrative Rules, Title 3
HCB	Hollow Core Block
HORIZ	Horizontal
HR	Hour
HRS	Hawaii Revised Statutes
HS	Highway Standard
HT	Height
ID	Inside Diameter
ID	Identification
IN	Inch
LF	Linear Feet
LBS	Pounds
LG	Long
LRFD	Load and Resistance Factor Design
MJ	Mechanical Joint
MAX	Maximum
MGD	Million Gallons Per Day
MH	Manhole
MIL	Millimeter
MIN	Minimum
MIPT	Male Iron Pipe Thread
MPT	Male Pipe Thread
MTD	Mounted
NPTE	National Pipe Thread, External
NPTI	National Pipe Thread, Internal
N/A	Not Applicable

ABBREV.	DESCRIPTION
NA	Not Allowed
NEC	National Electric Code
NEMA	National Electrical Manufacturer's Association
NO	Number
NPDES	National Pollutant Discharge Elimination System
NRS	Non Rising Stem
NSF	National Sanitation Foundation
NTS	Not To Scale
OC	On Center
OCEW	On Center Each Way
OD	Outside Diameter
OS & Y	Operating Stem & Yoke
OSHA	Occupational Safety and Health Act
OZ	Ounce, Ounces
PC	Point of Curvature
PJ	Pack Joint
PL	Property Line
PT	Point of Tangency
PCF	Pounds Per Cubic Foot
PE	Plain End
PE	Polyethylene
PE X FE	Plain End by Flanged End
PLT	Plate
PSF	Pounds Per Square Foot
PSI	Pounds Per Square Inch
PVC	Polyvinyl Chloride
R/W	Right-of-Way
RAD	Radius
RED	Reducer
REINF	Reinforce, Reinforcing, Reinforcement

ABBREV.	DESCRIPTION
REQ'D	Required
RO	Revised Ordinances, City and County of Honolulu
RP	Reduced Pressure Backflow Preventer
SE	Screwed End
SJ	Slip Joint
SP	Special Provision
SQ	Square
SS	Stainless Steel
STD	Standard
STL	Steel
T & B	Top & Bottom
THK	Thick
TV	Top Vertical
TYP	Typical
UBC	Uniform Building Code
UL	Underwriters' Laboratories, Inc.
USG	U. S. Standard Gage
USGS	U. S. Geological Survey
VB	Vacuum Breaker (atmospheric or pressure type)
VERT	Vertical
VOL	Volume
W/	With
W/O	Without
WF	Wide Flange
WT	Watertable
WWF	Welded Wire Fabric

TABLE OF CONTENTS

SECTION PAGE

FOREWORD i
Scope, Conformity and Use, Amendments, Definitions, Reference Specifications and Abbreviations

DIVISION 100 - PLANNING

101 GENERAL 101-1

102 MAINS

102.01 Location 102-1
102.02 Pipeline Easements 102-3
102.03 Cover 102-4
102.04 Diameter 102-4
102.05 Type, Class 102-5
102.06 Jackets 102-6
102.07 Deflection Per Joint 102-7
102.08 Street Ends 102-10
102.09 Corrosion Protection 102-11

103 MAIN VALVES

103.01 Location, Type, Working Pressure 103-1
103.02 Manholes and Valve Boxes 103-3

104 APPURTENANCES

104.01 Hydrants 104-1
104.02 Service Laterals and Connections 104-2
104.03 Meter Boxes 104-4
104.04 Thrust Blocks and Beams 104-5
104.05 Riprap over Trench 104-5
104.06 Air Relief Valves/Combination Air Valves 104-5
104.07 Blowoff Lines 104-6
104.08 Cleanouts 104-6

SECTION PAGE

105 STRUCTURES

105.01 General 105-1
105.02 Approval 105-1
105.03 Drainage System 105-1
105.04 Access Road 105-1
105.05 Access Road Gate 105-1
105.06 Landscaping 105-2
105.07 Acoustical Requirements 105-2
105.08 Perimeter Fence 105-2
105.09 Drainage Easements 105-2
105.10 Reservoirs 105-3
105.11 Corrosion Protection 105-4

106 MECHANICAL AND ELECTRICAL

106.01 General 106-1
106.02 Pumps 106-1
106.03 Motors 106-1
106.04 Instrumentation 106-1
106.05 Chlorinators 106-1
106.06 Shutoff Valves 106-1
106.07 Flow Meters 106-1

107 BACKFLOW PREVENTION ASSEMBLY

107.01 General 107-1
107.02 Requirements for Non-specified Facilities 107-1
107.03 Requirements for Backflow Prevention 107-1

108 WELL DRILLING

108.01 General 108-1

109 LANDSCAPING AND IRRIGATION

109.01 General 109-1

SECTION PAGE

110 PLANNED DEVELOPMENTS

110.01 Introduction 110-1
110.02 Plans 110-1
110.03 Fire Hydrants 110-1
110.04 Water Mains 110-3
110.05 Drainage 110-3
110.06 Fire Flow 110-3
110.07 Second Feed 110-3

111 WATER REQUIREMENTS

111.01 General 111-1
111.02 Domestic Consumption Guideline 111-1
111.03 Fire Flows, Duration, and Hydrant Spacing 111-1
111.04 System Capacity 111-2
111.05 Demand Factors 111-2
111.06 Pipeline Sizing 111-5
111.07 Reservoir Capacity 111-6
111.08 Total Pump Capacity 111-6

112 CONSTRUCTION PLANS

112.01 General 112-1
112.02 Plans 112-1
112.03 Miscellaneous Submittals 112-4
112.04 Submittals Prior to Construction 112-5
112.05 Submittals During Construction 112-5
112.06 As-Built Construction Plans 112-5

113 WATER MASTER PLAN

113.01 General 113-1
113.02 Plans 113-1
113.03 Development by Phases 113-1

DIVISION 200 - MATERIALS

SECTION PAGE

201 GENERAL 201-1

202 DUCTILE IRON PIPE, FITTINGS AND APPURTENANCES

202.01 General 202-1
202.02 Mechanical Joint 202-4
202.03 Push-on Joint 202-4
202.04 Flanged Joint 202-5
202.05 Special Fittings 202-5

203 CONCRETE CYLINDER PIPE AND FITTINGS

203.01 General 203-1
203.02 Pretensioned Concrete Cylinder Pipe 203-2
203.03 Cement Mortar Lined and Coated Cylinder Pipe 203-4
203.04 Concrete Cylinder Fittings 203-5
203.05 Corrosion Protection 203-6

204 PLASTIC PIPE

204.01 Polyvinyl Chloride (PVC) C-900 & C-905 Pipe 204-1

205 VALVES AND APPURTENANCES

205.01 General 205-1
205.02 Gate Valves 205-1
205.03 Butterfly Valves and Manual Operators 205-4
205.04 Tapping Valves and Sleeves 205-5
205.05 Ball Valves and Appurtenances 205-5
205.06 Air Relief Valves/Combination Air Valves and Appurtenances 205-6

206 HYDRANT AND APPURTENANCES

206.01 General 206-1
206.02 Wet-Barrel Hydrants 206-2
206.03 Dry-Barrel Hydrants 206-2
206.04 Hydrant Markers 206-3

SECTION PAGE

207 CAST IRON MANHOLE COVERS, FRAMES, RUNGS, EYEBOLTS, METER BOX AND VALVE BOX COVERS AND FRAMES, AND STANDPIPE

207.01 General 207-1
207.02 Manhole Covers and Frames 207-1
207.03 Manhole Rungs 207-2
207.04 Eyebolts, Nuts, and Washers for Type "A" Manhole 207-2
207.05 Meter Box Covers and Frames 207-2
207.06 Valve Box Covers and Frames and Standpipes 207-3
207.07 Brass Plates 207-3

208 SERVICE LATERALS AND APPURTENANCES

208.01 Copper Tubing 208-1
208.02 Brass Pipe 208-1
208.03 Plastic Tubing 208-1
208.04 Ball Corps 208-3
208.05 Ball Stops 208-4
208.06 Couplings 208-5
208.07 Service Saddles 208-5
208.08 Meter Box 208-6

209 PREMOLDED FILLER, CRUSHED ROCK, PIPE CUSHION, BACKFILL MATERIAL AND BRICKS

209.01 Premolded Filler 209-1
209.02 Pipe Cushion 209-1
209.03 Crushed Rock 209-2
209.04 Backfill Material 209-2
209.05 Bricks 209-3

210 VALVE MARKERS, PIPE HANGERS, LATERAL BRACINGS AND INSERTS

210.01 Valve Markers 210-1
210.02 Pipe Hangers, Lateral Bracings, and Inserts 210-1

211 BRASS PRODUCTS

211.01 General 211-1

SECTION PAGE

212 MISCELLANEOUS

212.01 Asphalt Seal for Reservoir Interior Perimeter 212-1
212.02 Asphaltum 212-1
212.03 Bitumastic Coating 212-1
212.04 Crystallization Products 212-2
212.05 Geotextile Fabrics 212-2
212.06 Petroleum Asphaltic Coatings (Factory Applied) 212-3
212.07 Wall Sliding Joint Material 212-3
212.08 Warning Tape 212-3
212.09 Waterstops 212-4

DIVISION 300 - CONSTRUCTION

SECTION PAGE

301 INTRODUCTION

301.01 General 301-1
301.02 Authority of Manager 301-1
301.03 Measurement and Payment 301-1
301.04 Quality of Materials for Construction 301-2
301.05 Sanitation 301-2
301.06 Provision for Emergencies 301-2
301.07 Accidents 301-2
301.08 Disturbing Monuments 301-3
301.09 Trees, Plantings, Shrubs and Grass 301-3
301.10 Responsibility Regarding Existing Utilities and Structures . . . 301-3
301.11 Notice to Public of Closing or Obstructing Public Thoroughfare 301-5
301.12 Cleaning Up 301-5
301.13 Patented Articles 301-6
301.14 Explosives 301-6
301.15 Use and/or Damage to Private Property (Property Owned Other Than by the Contractor) 301-6
301.16 Inspection 301-6
301.17 Additional Requirements for Private Development Projects 301-7

302 WATER MAINS AND APPURTENANCES

302.01 General 302-1
302.02 Trench Excavation 302-3
302.03 Trench Backfill 302-6
302.04 Sheathing 302-9
302.05 Dewatering 302-9
302.06 “Adobe” or Clay 302-10
302.07 Mud Removal and Crushed Rock Trench Stabilization 302-10
302.08 Blasting 302-11
302.09 Excavation for Manholes 302-11
302.10 Excavation for Thrust Blocks, Beams and Test Blocks 302-11
302.11 Surplus Excavation 302-12
302.12 Ductile Iron Pipe 302-12
302.13 Concrete Cylinder Pipe 302-15
302.14 Plastic Pipe 302-19

SECTION PAGE

302.15 Fittings and Specials (Ductile Iron, Concrete Cylinder, Plastic PVC Pipe) 302-20
302.16 Gate Valves and Butterfly Valves 302-21
302.17 Air Relief Valves/Combination Air Valves (ARV) and Appurtenances 302-23
302.18 Service Laterals, Connections and Pipes 302-24
302.19 Meter Boxes 302-27
302.20 Fire Hydrants 302-28
302.21 Fire Hydrant Markers 302-30
302.22 Concrete Blocks, Jackets, Beams, Curb Guards, Slab for Fire Hydrants and Meter Boxes, Manhole and Valve Box Collar 302-30
302.23 Manholes 302-32
302.24 Valve Boxes 302-34
302.25 Existing Water System 302-35
302.26 Water Supply 302-35
302.27 Pipe Cleaning 302-36
302.28 Pipe Pressure Tests 302-37
302.29 Chlorination of Water Pipelines 302-38
302.30 Connections, Relocations and Lowering of Water Mains and Laterals 302-41
302.31 Removing or Demolishing, Reinstalling or Returning Existing Pipes and Appurtenances 302-43
302.32 Pipe Hangers, Lateral Bracings and Inserts 302-45
302.33 Pipe Sleeves Through Retaining Walls 302-45
302.34 Cleanouts and Risers 302-45
302.35 Valve Markers 302-46
302.36 Slow Curing Asphalt (SC-4) Pavement (Cold Mix) 302-46
302.37 Restoring Pavements, Driveways, Sidewalks, Curbs, Gutters, Fences, Walls and Miscellaneous 302-47
302.38 Corrosion Protection 302-49
302.39 Confined Spaces 302-49

303 STRUCTURES

303.01 General 303-1
303.02 Sitework 303-1
303.03 Concrete Work 303-7
303.04 Reinforcing Steel 303-21
303.05 Welded Wire Fabric 303-22
303.06 Reinforced Concrete Reservoir 303-22
303.07 Prestressed Concrete Reservoir 303-25
303.08 Facility Piping 303-33

SECTION PAGE

303.09 Sampling Tube and Chlorine Injection Line 303-33
303.10 Reservoir Leakage Test and Disinfection 303-34
303.11 Structure Clean-Up 303-36
303.12 Protection of Reservoir 303-37
303.13 Unit Masonry 303-37
303.14 Stone Masonry 303-42
303.15 Concrete Roofing Tile 303-44
303.16 Built-Up Roofing 303-45
303.17 Metal Roofing and Siding 303-47
303.18 Quarry Tile Work 303-51
303.19 Carpentry and Millwork 303-52
303.20 Drywall Construction 303-55
303.21 Caulking 303-57
303.22 Miscellaneous Iron and Metal Work 303-58
303.23 Doors and Frames 303-63
303.24 Finish Hardware 303-68
303.25 Acoustical Tile 303-69
303.26 Sound Attenuating Enclosures 303-73
303.27 Painting 303-73
303.28 Architectural Specialties 303-75
303.29 Miscellaneous Specialties 303-77
303.30 Plumbing 303-77
303.31 Drainage System 303-81
303.32 Access Road and Paved Area 303-84
303.33 Chain Link Fence and Gate 303-92

304 MECHANICAL AND ELECTRICAL

304.01 Pumps 304-1
304.02 Motors 304-1
304.03 Electrical Work 304-2
304.04 Pump Station Mechanical Equipment 304-4

305 BACKFLOW PREVENTION ASSEMBLIES

305.01 General 305-1
305.02 Installation 305-1
305.03 Testing 305-3
305.04 Payment 305-3

SECTION PAGE

306 WELL DRILLING

306.01 General 306-1
306.02 Mobilization and Demobilization 306-1
306.03 Well Drilling to Casing Depth 306-1
306.04 Well Casing 306-2
306.05 Filling of Annular Space 306-4
306.06 Plumbness and Alignment 306-4
306.07 Abandonment of Well 306-5
306.08 Well Drilling Below Bottom of Casing 306-5
306.09 Additional Well Drilling, Cleansing and Testing 306-6
306.10 Well Cleansing 306-6
306.11 Set-Up for Yield-Drawdown and Sustained Pumping Tests of Well 306-7
306.12 Testing for Yield-Drawdown and Sustained Pumping 306-8
306.13 Completion of Well 306-9
306.14 Clean-Up 306-9

307 LANDSCAPING AND IRRIGATION

307.01 Landscaping 307-1
307.02 Irrigation 307-8

DIVISION 400 - APPROVED MATERIAL LIST AND STANDARD DETAILS

SECTION		PAGE
401	GENERAL	401-1
402	APPROVED MATERIAL LIST	
I.	Pipes and Appurtenances	402-1
II.	Valves and Appurtenances	402-8
III.	Service Laterals, Fittings and Appurtenances	402-20
IV.	Fire Hydrants	402-28
V.	Paint	402-30
VI.	Miscellaneous	402-52
403	STANDARD DETAILS	
	Application Table	403-1
		Detail Nos.
I.	Concrete Reaction Blocks, Valve Anchor Blocks, Beams, and Jackets (B)	B1-B23
II.	Chain Link Fence and Gate (F)	F1-F5
III.	Fire Hydrant and Appurtenances (FH)	FH1-FH13
IV.	Service Laterals (L)	L1-L38
V.	Meter Boxes, and 3-Inch and Larger Meters (M)	M1-M43
VI.	Manholes (MH)	MH1-MH25
VII.	Trench Detail, and Concrete Cylinder Pipe and Appurtenances (P)	P1-P12
VIII.	Valves and Appurtenances (V)	V1-V23

DIVISION 500 - WATER SYSTEM EXTERNAL CORROSION CONTROL STANDARDS

SECTION PAGE

Not applicable for Hawaii and Kauai: Refer to the "WATER SYSTEM EXTERNAL CORROSION CONTROL STANDARDS", VOLUME 3, DATED 1991 and all subsequent amendments and additions (under separate cover and not included in these Standards).

APPENDIX

SECTION PAGE

APPENDIX A - LIST OF TABLES A-1

APPENDIX B - INDEX B-1

DIVISION 100 - PLANNING

TABLE OF CONTENTS
DIVISION 100 - PLANNING

SECTION		PAGE
101	GENERAL	101-1
102	MAINS	
102.01	Location	102-1
102.02	Pipeline Easements	102-3
102.03	Cover	102-4
102.04	Diameter	102-4
102.05	Type, Class	102-5
102.06	Jackets	102-6
102.07	Deflection Per Joint	102-7
102.08	Street Ends	102-10
102.09	Corrosion Protection	102-11
103	MAIN VALVES	
103.01	Location, Type, Working Pressure	103-1
103.02	Manholes and Valve Boxes	103-3
104	APPURTENANCES	
104.01	Hydrants	104-1
	A. Spacing	104-1
	B. Location	104-1
	C. Depth	104-2
	D. Outlets	104-2
104.02	Service Laterals and Connections	104-2
	A. Location	104-2
	B. Cover	104-3
	C. Diameter	104-3
	D. Type of Lateral and Connection	104-3
	E. Connection to Main	104-3
104.03	Meter Boxes	104-4
104.04	Thrust Blocks and Beams	104-5
104.05	Riprap over Trench	104-5
104.06	Air Relief Valves/Combination Air Valves	104-5
104.07	Blowoff Lines	104-6

SECTION PAGE

104.08 Cleanouts 104-6
A. Permanent Cleanouts 104-6
B. Temporary Cleanouts 104-6

105 STRUCTURES

105.01 General 105-1
105.02 Approval 105-1
105.03 Drainage System 105-1
105.04 Access Road 105-1
105.05 Access Road Gate 105-1
105.06 Landscaping 105-2
105.07 Acoustical Requirements 105-2
105.08 Perimeter Fence 105-2
105.09 Drainage Easements 105-2
105.10 Reservoirs 105-3
A. Size 105-3
B. Type 105-3
C. Influent - Effluent Line 105-3
D. Washout Line 105-3
E. Overflow Line 105-3
F. Washdown Connection 105-3
G. Instrument Pressure Line 105-3
H. Sampling Line 105-3
I. Perimeter Road 105-4
J. Access to Reservoir 105-4
K. Blowoff Lines 105-4
L. Chlorination Line 105-4
M. Painting 105-4
N. Floor Cement Topping 105-4
O. Exterior and Interior Ladders 105-4
105.11 Corrosion Protection 105-4

106 MECHANICAL AND ELECTRICAL

106.01 General 106-1
106.02 Pumps 106-1
106.03 Motors 106-1
106.04 Instrumentation 106-1
106.05 Chlorinators 106-1
106.06 Shutoff Valves 106-1

SECTION PAGE

106.07 Flow Meters 106-1

107 BACKFLOW PREVENTION ASSEMBLY

107.01 General 107-1
107.02 Requirements for Non-specified Facilities 107-1
107.03 Requirements for Backflow Prevention 107-1

108 WELL DRILLING

108.01 General 108-1

109 LANDSCAPING AND IRRIGATION

109.01 General 109-1

110 PLANNED DEVELOPMENTS

110.01 Introduction 110-1
110.02 Plans 110-1
110.03 Fire Hydrants 110-1
A. Spacing 110-1
B. Accessibility 110-2
110.04 Water Mains 110-3
A. Unpaved Areas 110-3
B. Paved Traveled Areas 110-3
C. Off Roadways 110-3
110.05 Drainage 110-3
110.06 Fire Flow 110-3
110.07 Second Feed 110-3

111 WATER REQUIREMENTS

111.01 General 111-1
111.02 Domestic Consumption Guideline 111-1
111.03 Fire Flows, Duration, and Hydrant Spacing 111-1
111.04 System Capacity 111-2
111.05 Demand Factors 111-2
111.06 Pipeline Sizing 111-5
111.07 Reservoir Capacity 111-6
111.08 Total Pump Capacity 111-6

SECTION PAGE

112 CONSTRUCTION PLANS

112.01 General 112-1
112.02 Plans 112-1
112.03 Miscellaneous Submittals 112-4
112.04 Submittals Prior to Construction 112-5
112.05 Submittals During Construction 112-5
112.06 As-Built Construction Plans 112-5

113 WATER MASTER PLAN

113.01 General 113-1
113.02 Plans 113-1
113.03 Development by Phases 113-1

DIVISION 100 - PLANNING

SECTION 101 - GENERAL

All proposed work shown in the Plans submitted to the Manager for approval shall be designed according to these Standards unless otherwise directed by the Manager.

The Manager may grant exception to the Standards to permit reasonable utilization of engineering judgment while at the same time securing substantial conformance with the objectives of these Standards.

SECTION 102 - MAINS

102.01 LOCATION.

Mains, other than those installed in easements or rights-of-ways, shall be located in the paved street area at the respective distances from the face of curb as listed below unless otherwise required to clear obstructions or as determined by the Manager:

Island	Feet
Hawaii, Kauai	5
Maui, Oahu	10

For Oahu Only: Mains shall be located 3 feet minimum clear from curbs, curb ramps or edge of gutters and shall also be aligned to provide 3 feet clearance between edges of valve boxes or manholes and curbs, curb ramps or gutters.

Within easements and rights-of-way, mains shall be accessible at all times clear of any parking stalls and above ground structures and located as determined by the Manager.

In case of extra wide streets, the Manager may require that two parallel, interconnected mains be installed, one on each side of the street. Sizes and other details in such cases shall be as approved by the Manager.

On side hill streets, the main shall, where possible, be located on the cut side of the centerline of the street. Where practicable, mains shall be located on the high side of super-elevated curves.

Unless otherwise specified by the Manager, where mains are to be installed in vicinity of trees, provide 8 feet minimum clearance to the outermost edge of the trunk of the trees or concrete jacket the main and provide 5 feet minimum clearance to the outermost edge of the trunk of the tree. Install root barrier around trees. *(For Hawaii and Oahu only: Provide 3 feet minimum clearance from the spread of the tree where practicable.)*

Where practicable, mains shall be located out of street parking areas and in one lane of the road to minimize traffic disruptions.

Mains and concrete thrust blocks shall be located 3 feet minimum clear from street monuments and temporary benchmarks.

Guardrail post locations are to be kept to a minimum clear distance of 18 inches to any 2-1/2-inch or smaller water lines and meter boxes. No post driving will be allowed when post is to be installed closer than 3 feet from 3-inch and larger water mains.

No gas, petroleum, sewer main, nonpotable water main, electric or telephone duct or other utility line shall be installed in the same trench with potable water mains.

For stub-outs, mains shall be located to provide adequate room for future extension and clearance to existing and proposed utilities.

For cross-country mains and mains located in inaccessible areas, as approved by the Manager, mains shall be concrete jacketed. Grouted riprap paving with adequate concrete keys and weepholes shall be constructed.

Minimum horizontal and vertical clearances between water mains and other utilities except sanitary sewers are listed in Table 100-1. Minimum clearances shall be measured between outer edges or diameters of the utilities. Wherever possible, water mains shall be installed at a higher elevation than sewer mains. Refer to Section 102.06 - JACKETS and Table 100-5 for criteria for use of concrete jackets with sanitary sewers. Whenever concrete jackets are involved, clearances shall be total clear distance between the concrete jacket and utility concerned. The water main shall be concrete jacketed when determined necessary by the Manager.

Utilize perpendicular crossings with other ducts and utilities where practicable.

Table 100-1 - Water Main Clearances

Island	Utility Diameter (Inches)	Clearances	
		Horizontal (Feet)	Vertical (Inches)
Hawaii	All Sizes	8	18[a]
Kauai	All Sizes	8	18[b]
Maui, Oahu	<16	3	6[b]
	≥ 16	3[c]	12[b]

a - Provided other utility mains are concrete jacketed.
b - For trenchless installation work (micro-tunneling, directional drilling, pipe ramming/jacking of new utilities such as electrical duct lines, sewer lines, drain lines) crossing or paralleling existing water mains, provide 3 feet vertical clearances to existing mains.
c - For Oahu only: 5 feet clear to water mains 16-inches and larger.

The utility owner or Contractor shall make the necessary adjustments to meet the minimum clearances to the water mains prior to construction at no cost to the Department should the existing water mains and appurtenances be found closer to the proposed utility line after probing work. The Manager may require additional clearances based on the size of the utilities, the location and size of water mains, bends, fittings and concrete blocks, the existing soil and ground conditions and the type of installation work.

102.02 PIPELINE EASEMENTS.

Water pipeline easements shall be granted to the Department for all water mains to be conveyed to the Department which are located within private properties and roadways that will not be dedicated to the City/County. Easements are also required in the interim for roadways that are temporarily privately owned until improved and dedicated to the City/County at a later date. The minimum width of easements shall be as listed in Table 100-2.

For Oahu Only: Upon completion of the project, the developer shall provide the Department with a certificate from a licensed civil engineer specializing in geotechnical engineering certifying that the road prism along the easements has been constructed in accordance to City and County Roads Standards for pipelines to be located in private properties and roadways.

Table 100-2 - MINIMUM EASEMENT WIDTH REQUIRED (FEET)

Island	Pipelines 12-Inch Diameter or Smaller	Pipelines 16-Inch Diameter or Larger	Roadway Areas	Fire Hydrants, Water Meters, and Other Appurtenances Outside of Roadways or Right-of-Ways
All Islands	15	20	Full Width of the right-of-way and/or pavement, whichever is wider	10 feet wide and 5 feet beyond such facilities*

* Size of easement shall be determined by the Manager.

Note: 1. *For Maui Only: The required easement documents will be executed and submitted to the Department and recorded prior to approval of the construction plans.*
2. *For Hawaii Only: Provide 10-feet wide minimum all weather road as approved.*
3. *For Oahu Only: Provide 12-feet wide minimum all weather road as approved.*

102.03 COVER.

Invert grades of water mains shall provide minimum cover as specified in Table 100-3 and also to assure proper clearance between top of valves and bottom of manhole covers or valve box covers as provided in the section on Main Valves. Minimum cover shall be maintained after any road improvement work including cold planing and resurfacing.

Table 100-3 - COVER FOR WATER MAINS (FEET)

Island	Minimum Cover for Pipe Diameter Indicated[a]						Maximum[b] For All Mains
	Smaller Than 4-Inch	4-Inch	6-Inch	8-Inch	12-Inch	Larger Than 12-Inch	
Oahu	1.5	2.5	3.0	3.0	3.0	3.0	8
Hawaii	1.5	2.0	2.0	2.0	2.5	3.0	5
Kauai	3.0	3.0	3.0	3.0	3.0	3.0	8
Maui	N/A	2.5	3.0	3.0	3.0	3.0	5

a - Minimum cover for mains and laterals to be installed in State rights-of-way shall be 3 feet.

b - Over maximum cover requires Manager's approval and concrete jacketing of pipe.

102.04 DIAMETER.

Diameter of water main shall be designed to deliver water in adequate quantities and pressures for domestic use under peak consumption conditions and fire fighting in accordance with these Standards.

Standard water main diameters shall be 2½ *(except Hawaii and Maui),* 3 *(Kauai only)*, 4, 6, 8, 12,16, 18 *(except Oahu),* 20, 24, 30, 36 and 42-inches.

For Kauai Only: The minimum water main diameter shall be 6-inches. The water main diameter may be reduced after the last fire hydrant. Mains less than 6-inches in diameter shall be Ductile Iron Cl. 52, PVC C900 Cl. 150 or 200, brass pipe or copper tubing.

102.05 TYPE, CLASS.

Types and classes of mains are as shown in Table 100-4.

Table 100-4 - TYPES AND CLASSES OF MAINS

Island	Ductile Iron Cl. 52	Concrete Cylinder Cl. 150 Or 250	Cl. 150 or 200 PVC C900	Cl. 150 PVC C905
Hawaii	1,10	NA	NA	NA
Kauai	1,8	NA	7	NA
Maui	1,4,8	3,4	NA	NA
Oahu	1,4,9	4,5	2,4	4,6

1 - Mains 4-inch through 42-inch in diameter.

2 - Mains 4-inch through 12-inch in diameter (Cl. 150 = DR 18, Cl. 200 = DR 14).

3 - Mains 30-inch in diameter or larger.

4 - See Division 500 for external corrosion control requirements as applicable to the project. *(For Maui Only: Applicable to main sizes of 24-inch and larger)*.

5 - Mains 16-inch through 42-inch in diameter. Class 250 straight pipes only. Class 150 is not allowed.

6 - Mains 16-inch through 30-inch in diameter with DR of 18.

7 - Mains 4-inch through 8-inch in diameter.

8 - Polyethylene wrap mains and fittings, 8 mils minimum total thickness.

9 - Polyethylene wrap mains and fittings, double wrap, 16 mils minimum total thickness.

10 - Polyethylene wrap mains and fittings with invert elevations of 5 feet and below.

NA - Not Allowed.

Joints shall be push-on joint, mechanical joint or flange joint unless otherwise allowed. In all cases, the Manager reserves the right to specify the type of pipe, joint, or class of pipe to be used. The class of water mains shall be determined by the maximum pressure to be expected in the line. The class of pipe and test pressure shall be as shown on the plans. Provide a minimum of 2 feet clearance between edges of glands or bolts of adjacent fittings.

Where water mains are attached to or suspended from a bridge, pier, or other structures subject to vibration, mechanical joint or push-on joint shall be used. Sleeves shall be installed at the midpoint of bridge spans with one inch spacing or as called for on the plans between pipes. Adequate support and bracing shall be provided to prevent lateral movement. If the water line is cathodically protected or set up for future cathodic protection, it shall be electrically isolated from the bridge, pier, or other structures.

When non-metallic pipe or lateral is used, installation of toning wire or toning tape shall be required and as specified on the plans.

When connecting to existing mains, like materials shall be used to replace the existing mains unless otherwise specified.

102.06 JACKETS.

Wherever the main crosses under a streambed, large structure or utility larger than 16-inch diameter constituting a potential hazard to the main or where the main location is considered inaccessible by the Manager, the main shall be jacketed with reinforced DWS 2500 concrete. Necessary measures shall be taken to protect the stream embankment from erosion at the points of crossing. For cross-country mains and mains located in inaccessible areas, as approved by the Manager, mains shall be concrete jacketed. Grouted riprap paving with adequate concrete keys shall be constructed on steeper slopes. Additional valves may be required before and after streambed or structure crossing and jacketed mains where practicable.

Plastic and existing asbestos cement pipes shall not be jacketed. Ductile iron or concrete cylinder pipe and fittings shall be used for the portion to be jacketed.

Whenever a water main crosses over or under a sewer line, the sewer line will be concrete jacketed as listed in Table 100-5. Standard concrete jacket details for sewer lines as specified by the Department of Public Works Standards shall be followed.

Table 100-5 - CONCRETE JACKET REQUIREMENTS FOR SEWER MAINS		
Island	Water Main Under Sewer Main	Water Main Above Sewer Main
Hawaii	a	c
Kauai, Maui, Oahu	a	b

a - 5 L.F. of reinforced concrete jacket on both sides of crossing
b - 3 L.F. of reinforced concrete jacket on both sides of crossing (when water line is less than 18 inches above sewer line)
c - 5 L.F. of reinforced concrete jacket on both sides of crossing (when water line is within 6 feet of pressurized sewer line or within 18 inches of gravity sewer line)

For Maui only: Whenever a water main crosses over or under a buried electrical, telephone, or cable line, the electrical line shall be jacketed. The length of jacket required for the electrical, telephone, or cable line shall be as specified for sewer lines in Table 100-5. Standard concrete jacket details for sewer lines as specified by the Department of Public Works Standards shall be followed.

102.07 DEFLECTION PER JOINT.

Deflection in laying ductile iron mechanical joint and push-on joint pipes and concrete cylinder pipes shall not exceed that shown in Table 100-6, Table 100-7 and Table 100-8. Maximum permissible deflection for laying plastic pipes varies with the type of plastic pipe being used.

Table 100-6 - MAXIMUM PERMISSIBLE DEFLECTION FOR LAYING MECHANICAL JOINT PIPE					
Nom. Pipe Diameter (Inches)	Deflection Per Joint (Degrees)	Maximum Deflection With Pipe Length Of: (Inches)		Minimum Radius of Curve With Pipe Length Of: (Feet)	
		18 Ft.	20 Ft.	18 Ft.	20 Ft.
4	8° 18'	31	34	125	140
6	7° 07'	27	30	145	160
8	5° 21'	20	22	195	220
12	5° 21'	20	22	195	220
16	3° 35'	13.5	15	285	320
18	3° 00'	11	12	340	380
20	3° 00'	11	12.5	340	380
24	2° 23'	9	10	450	500
30	2° 23'	9	10	450	500
36	2° 05'	8	9	500	550
42	2° 00'	7.5	8	510	570

For Oahu only: The maximum permissible deflection per joint for laying pipes shall be 50 percent of the deflection per joint in Table above to facilitate repair and/or replacement of pipes. Avoid installation of pipe with deflections on a radius. Periodic bends are recommended where practicable.

Table 100-7 - MAXIMUM PERMISSIBLE DEFLECTION FOR LAYING PUSH ON JOINT PIPE					
Nom. Pipe Diameter (Inches)	Deflection Per Joint (Degrees)	Maximum Deflection With Pipe Length Of: (Inches)		Minimum Radius of Curve With Pipe Length Of: (Feet)	
		18 Ft.	20 Ft.	18 Ft.	20 Ft.
4	5° 00'	19	21	205	230
6	5° 00'	19	21	205	230
8	5° 00'	19	21	205	230
12	5° 00'	19	21	205	230
16	3° 00'	15	17	340	380
18	3° 00'	11	12	340	380
20	3° 00'	11	12	340	380
24	3° 00'	11	12	340	380
30	3° 00'	11	12	340	380
36	3° 00'	11	12	340	380
42	2° 00'	7.5	8	510	570

Maximum permissible deflection taken from AWWA C600. Maximum deflection angle may be larger than shown above for main 16-inch and larger. Consult pipe manufacturer.

For Oahu only: The maximum permissible deflection per joint for laying pipes shall be 50 percent of the deflection per joint in Table above to facilitate repair and/or replacement of pipes. Avoid installation of pipe with deflections on a radius. Periodic bends are recommended where practicable.

Table 100-8 - *MAXIMUM PERMISSIBLE DEFLECTION FOR LAYING CONCRETE CYLINDER PIPE					
Nom. Pipe Diameter (Inches)	Deflection Per Joint (Degrees)	Maximum Deflection With Pipe Length of: (Inches)		Minimum Radius of Curve With Pipe Length Of: (Feet)	
		16 Ft.	32 Ft.	16 Ft.	32 Ft.
16	2° 24'	8.0	16.0	382	764
18	2° 07'	7.1	14.2	400	800
20	1° 55'	6.4	12.8	474	948
24	2° 10'	7.3	14.5	423	846
30	1° 46'	5.9	11.8	519	1038
36	1° 29'	5.0	10.0	625	1250
42	1° 17'	4.3	8.6	724	1448

*The maximum deflection may be exceeded for pipes and fittings with beveled ends.

For Oahu only: The maximum permissible deflection per joint for laying pipes shall be 50 percent of the deflection per joint in Table above to facilitate repair and/or replacement of pipes. Avoid installation of pipe with deflections on a radius. Periodic bends are recommended where practicable.

102.08 STREET ENDS.

At the end of a street which may be extended in the future, the water main shall, whenever possible, extend at least 5 feet beyond the end of the paving. Install valve and concrete beam with reverse bell pipe at stub-outs for future extension, where practicable. Where a proposed main extension would result in a dead-end, the condition shall, whenever possible, be corrected by the installation of water line circuits or interconnections as may be required by the Department to provide a two-way feed to the services. For developments with 100 or more subdivided lots, provide a second feed to the subdivision's water system unless otherwise approved by the Manager. Cleanouts with pipe markers or valve boxes, blowoffs, and air relief valve assemblies shall be installed as required for proper operation and maintenance of the main.

On dead-end streets, permission may be granted for laying mains 6-inch or smaller beyond the last fire hydrant where both of the following conditions are met:

1. Due to a natural barrier, the street will never be extended; and

2. Due to topography or street arrangement, it is the Manager's opinion that it is impractical to require a connection between the mains at the end of the dead-end street and some other main in order to complete a good gridiron.

A properly sized distribution main when directed by the Manager shall be installed parallel to a 16-inch or larger transmission main to avoid connecting laterals to the transmission main.

102.09 CORROSION PROTECTION.

In locations below an elevation of 4 feet, or where water or especially corrosive soils, including those contaminated with petroleum products, are encountered or where other unfavorable conditions may subject the pipe to serious corrosion, the Manager may specify the type of pipe to be used. Under such circumstances, corrosion protection for the pipe, fittings, and appurtenances may be required by the Manager. The materials and methods to be used for corrosion protection shall be specified on the plans or by special provisions or as directed by the Manager.

To ascertain whether unfavorable soil conditions exist, the Manager may request that soil boring samples at approximately the invert of the pipe be taken, analyzed, and submitted as part of the project.

For Maui and Oahu Only: Where corrosion protection is required, it shall be installed for all buried metallic pipes, fittings and appurtenances. Soil resistivity tests are required in all cases. The types of corrosion protection will be determined by the soil resistivity. If concrete-coated pipe is to be used, soil samples must be obtained and soil analysis (pH, chlorides, and sulfates) shall be performed in addition to the soil resistivity. The test results shall be submitted as part of the project design. See Division 500 of the Water System Standards for the appropriate corrosion protection as applicable to the project. The corrosion protection design shall be approved by the Manager.

SECTION 103 - MAIN VALVES

103.01 LOCATION, TYPE, WORKING PRESSURE.

Main valves shall be installed along the water main so that the maximum distance between valves shall not exceed the spacing listed in Table 100-9.

Table 100-9 - MAXIMUM DISTANCE BETWEEN MAIN VALVES (FEET)		
Residential, Agricultural	Transmission Mains	All Others Districts
750	2,000[a]	500[b,c]

a - *For Maui only: For mains 16-inch diameter or larger or as determined by the Manager, otherwise 1,000 feet.*
b - Or as determined by the Manager.
c - For mains that provide a one-way feed to subdivisions with more than 100 lots as determined by the Manager.

At all branches or intersections of mains, lines in each direction shall be valved, unless otherwise approved by the Manager. At street intersections, valves shall, wherever practicable, be located in "clusters" about the points of intersection of water mains.

Where a new main is connected to an existing main, valves on both the new and the existing main shall be installed as required above. Where it is impractical to shut off the "live" main for connection, a tapping sleeve with tapping valve shall be installed.

Wherever valves are to be installed, the pipe invert slope shall not exceed six percent. Valves shall be located so there will be a minimum clearance of 6 inches from the top of the valve stem to the underside of the valve box frame and cover or a 24 inch clearance from the top of the valve stem to the underside of the manhole slab. Valve markers and concrete slabs around the valve box frames and covers shall be installed for valves in unpaved and undeveloped areas.

Types of main valves for the various pipe sizes are listed in Table 100-10.

Table 100-10 - TYPES AND SIZE OF MAIN VALVES			
Island	Gate Valves	Bevel Geared	Butterfly
Maui	5[a]	NA	6
Kauai, Oahu	1	2[b]	2
Hawaii	3	NA	4

1 - 12-inch and smaller
2 - 16-inch and larger
3 - 8-inch and smaller
4 - Larger than 8-inch
5 - 16-inch and smaller (subject to pressure)
6 - 18-inch and larger
NA - Not Allowed

a - For 16-inch mains with working pressure of 100 psi or greater, use butterfly valves.
b - *For Oahu Only: Install bevel-geared gate valves with bypass at key locations including, but not limited to, facilities, intersections (cluster valve locations) and every 6,000 feet spacing for long continuous transmission mains. The Manager may specify the type of valve to be used for transmission mains.*

The classes of valves, which are listed in Table 100-11, denote the maximum pressure expected in the line and shall be shown on the plans.

Table 100-11 - CLASSES OF VALVES					
	Main Valves			Tapping Valves	
Island	150	200	250	150	200
Kauai, Oahu, Maui	a	a	a	a	a
Hawaii	NA	b	a	NA	a

a - Allowed, depending upon the maximum pressure expected in the main.
b - Allowed for gate valves only, depending upon the maximum pressure expected in the main.
NA - Not Allowed

103.02 MANHOLES AND VALVE BOXES.

Valve boxes shall be installed over all gate valves and air relief valves up to one-inch size except where manholes are called for by the Manager.

For Kauai and Hawaii Only: Valve Boxes only are required unless otherwise specified.

For Maui and Oahu Only: Manholes in lieu of valve boxes are required for the following conditions:

1. *For Maui Only: Whenever depth from the finish grade of the pavement or ground to the top of the stem of valve exceeds 4 feet.*

2. *For Oahu Only: Whenever depth from the finish grade of the pavement or ground to the pipe invert exceeds the maximum depth as listed in Table 100-12.*

3. Key mainline valves including, but not limited to, cluster valve locations, valves in high traffic areas and valves serving a one-way feed.

4. Valves to reservoirs, boosters, wells.

5. *For Oahu only: For air relief valves up to 3/4-inch size off mains 16-inches and smaller where ground water is encountered.*

6. Butterfly valves and bevel geared gate valves.

7. Valves submerged in seawater, in corrosive soils (areas with soil corrosion rating of 1 as defined in Division 500 or as determined by the Manager) or in petroleum saturated areas.

Table 100-12 - FOR *OAHU ONLY: MAXIMUM DEPTH OF PIPE INVERT FOR VALVE BOX INSTALLATION*

Size of Main (Inches)	Finish Pavement/ Grade to Invert (Feet)
4	6.5
6	7.0
8	7.5
12	8.5

Where manholes are required, the type and situations requiring them are listed in Table 100-13.

Table 100-13 - TYPES OF MANHOLES REQUIRED FOR GIVEN SITUATION

	Situation						
Island	1	2	3	4	5	6	7
Hawaii, Kauai	NA	NA	NA	NA	NA	NA	NA
Maui	A	NA	NA	D	NA	F	C
Oahu	A	B	C	D	E	NA	NA

Situation

1 - *For Maui only: For butterfly valves 12-inches and larger.*

For Oahu only: For bevel geared gate valves and butterfly valves 16-inches and larger. (Air relief valves are installed with bevel geared gate valves or butterfly valves 16-inches and larger.)

2 - For 12-inch gate valves and air relief valves on 16-inch mains.

3 - For 8-inch gate valves and smaller, air relief valves on mains 12-inch and smaller.

4 - For single or two 2-inch air relief valves offset from mains 20-inch and larger.

5 - For tapping valves.

6 - For air relief valves on mains 18-inch and smaller.

7 - Optional for single only air relief valve on mains 20-inch and larger.

Type of Manhole

A - Type A or A-1 Manhole
B - Type B Manhole
C - Type C Manhole
D - Type D Manhole
E - Type E Manhole
F - Type F Manhole
NA - Not Applicable

A 24 inch minimum clearance shall be provided between top of valve and bottom of manhole top slab. Pedestal anchorage straps for valves shall be installed in manholes for all PVC pipes.

SECTION 104 - APPURTENANCES

104.01 HYDRANTS.

A. Spacing. Hydrants shall be spaced as listed in Table 100-19 and located in accordance with these Standards.

B. Location. Hydrants shall be located to be fully accessible, and in such manner that the possibility of damage from vehicles or injury to pedestrians will be minimized. Hydrants shall be located as follows:

1. When located at street intersections, hydrants shall be 7 feet from P.C. or P.T. of curb returns or edge of any driveway apron or as directed by the Manager.

2. Hydrants shall be located in front of a boundary line between lots.

3. Hydrants shall not be installed on curves, except as approved by the Manager. On side hills, hydrants shall be located on the cut side.

4. Where practicable, hydrants shall be placed alternately on each side of the street.

5. On streets having an appreciable grade and in cases where the hydrant is to be installed with a 1/4 (90°) bend (see Standard Details), the hydrant shall be installed downhill from the connection to the main and the hydrant valve location *(For Hawaii only: The hydrant shall be installed uphill from the connection).*

6. *For Oahu only: On streets without curbs, protect hydrants with curb guards. Curb guard shall be 3 feet minimum clear from the edge of road pavement. Install guard posts and concrete pads, if there is inadequate room to install a hydrant curb guard clear of paved roadway.*

7. *For Kauai, Hawaii and Maui: On street without curbs, concrete pads shall be installed around the fire hydrants. Fire hydrant pads shall be flush with the finish grade.*

8. The minimum clearance between fire hydrants and utility poles, or light standards, property lines or any walls or obstructions shall be 3 feet. *(For Kauai only: 2 feet minimum clearance from property lines and walls.) (For Maui only: 2 feet minimum clearance from property lines and walls; 10 feet minimum clearance from utility poles, light standards and similar obstructions.) (For Hawaii only: 3 feet 6 inches minimum clearance from property lines and walls; 10 feet minimum clearance from utility poles, light standards and fixtures taller than the fire hydrant.)*

9. Fire hydrant valve and valve box or manhole shall be installed clear of the concrete curb and gutter. Fire hydrant valve shall be installed at a higher elevation than the hydrant where practicable and shall be installed downstream of traffic in relation to the hydrant where possible.

10. Fire hydrant shall be located to provide 3 feet minimum clear pathway for wheelchairs from the outside diameter, outlet or any protruding portion of the hydrant to the edge of accessible route.

The hydrant connection using an elbow as shown on the Standard Details shall depend on the space available between main and hydrant. Where the fire hydrant lateral is crossing wide streets along major thoroughfares, additional valve may be required 8 feet from the fire hydrant as directed by the Manager.

C. Depth. Lengths of hydrant buries shall be measured from the face of the flange to the center line of the 6-inch intake pipe.

D. Outlets.

1. The height of the centerline of the 4½-inch streamer nozzle shall be set above the curb or finish grade at a height of 22 $\pm$ 2 inches.

2. Direction of the 4½-inch outlet shall not exceed 15 degrees from the perpendicular to the road.

3. Outlet threads shall conform to National Fire Protection Association's "Standard for Screw Threads and Gaskets for Fire Hose Couplings".

104.02 SERVICE LATERALS AND CONNECTIONS.

A. Location. Service laterals and connections shall be constructed in accordance with the Standard Details as part of the project. Where practicable, laterals shall not be located adjacent to electric and telephone lines leading into the property to be served.

The ball stop at the beginning of the branch of the service lateral serving two or more meter sites shall be located in front of the boundary line between lots clear of driveway apron or flare. The ball stop shall be on a prolongation of this boundary line.

Where the street is of unusual width or where it is not permissible to connect laterals directly to the main, the Manager may require the installation of service mains in the sidewalk area parallel to the main. This installation should not be confused with a parallel main in the paved area. The Manager may permit connection of service laterals to fire hydrant laterals or laterals to 3-inch and larger meters with an isolation valve installed after the service lateral connection prior to the fire hydrant or meter.

B. Cover. Laterals shall have a minimum cover of 18 inches (3 feet in State DOT rights-of-way) or as specified elsewhere in these Standards.

C. Diameter. Diameters of service laterals and connections are identified by a code numbering system (see Standard Details). Appropriate codes shall be indicated on the Construction Plans.

D. Type of Lateral and Connection. Laterals and connection shall be of copper pipe with appropriate valves, stops and fittings as described in DIVISION 200 - MATERIALS, and as shown in the Standard Details. In special cases, subject to special design, 2-½-inch copper or larger ductile iron laterals and connections may be installed.

E. Connection to Main. Laterals shall be connected to the various types of mains as shown in the Standard Details and as specified in Table 100-14, subject to the following conditions:

1. The connection to the main shall be by a ball corp with Mueller (tapered) threads tapped into the main. Main shall not be tapped closer than 36 inches *(18 inches for Hawaii)* center to center.

2. Laterals shall not be connected to 16-inch or larger mains unless specifically permitted by the Manager.

3. Direct taps into plastic pipe or existing AC pipe shall not be permitted.

4. Where the size of the ball corporation is larger than allowed in Table 100-14, service saddle or double hub tee with boss (tapped with Mueller threads) as listed in Table 100-15, shall be installed to receive the ball corp. Only one tap per double hub tee will be permitted.

5. See Division 500 for the required corrosion protection and electrical isolation requirements as applicable to the project *(not applicable for Hawaii and Kauai)*. *(For Hawaii Only: Install dielectric unions between new copper service laterals and existing or new dissimilar metal pipes and fittings.) (For Oahu only: Install 3 feet (minimum) of plastic lateral (PE tubing) after meter.)*

6. Where laterals are allowed to take off from the end of mains, the caps shall be tapped with standard pipe threads with maximum permissible tap as recommended by the manufacturer *(not applicable for Hawaii)*.

7. Service lateral connections shall not be made at locations within easements that have no established accessible public roadways.

Table 100-14 - MAXIMUM ALLOWABLE DIRECT TAPS INTO DUCTILE IRON MAIN	
Main Size	Largest Tap Size
4"	1"
6"	1¼" (*For Oahu Only*: 1")
8"	1½"
10"	1½"
12"	2"

Table 100-15 - SERVICE SADDLES OR BOSSED TEES FOR TAPS IN MAINS			
Island	Service Saddle		Double Hub Tee With Boss
	Single Strap	Double Strap	
Hawaii, Kauai	a	b	c
Maui	NA	d	c
Oahu	NA	e	f

a - Allowed for taps up to and including 1-inch.
b - Allowed for taps 1½-inch to 2-inch on mains 4-inch to 12-inch diameter.
c - Allowed.
d - Allowed for taps for 1-inch to 2-inches.
e - Allowed for taps to existing PVC only.
f - Required for all PVC pipes.
NA - Not allowed.

104.03 METER BOXES.

Meter boxes shall be installed in public right-of-way areas clear of driveway aprons or flares and curb ramps or as directed by the Manager and as shown in the Standard Details for each lot at each service connection. *(For Maui only: One-inch and smaller meters shall be installed in public right-of-way and meters larger than one-inch in manholes shall be installed within private property with easements.)* The type of meter boxes to be used, spacing, dimensions, and other details shall be as shown in the Standard Details. *(For Oahu and Maui only: install concrete pads for meter boxes installed in dirt or unimproved areas.)*

104.04 THRUST BLOCKS AND BEAMS.

All fittings such as tees, plugs, caps, bends, offsets, reducers, and valves, as well as all other pipeline appurtenances which are subject to unbalanced thrust, shall be properly braced with thrust blocks of reinforced DWS 2500 concrete. At all top vertical bends, blocks shall be reinforced. Due to the various types and sizes of vertical bends and field conditions, the size, dimensions and reinforcing for the blocks will vary. The design engineer shall be responsible for the design and details of all concrete thrust blocks. *(For Oahu only: The Department will furnish the design and details of all concrete thrust blocks for projects awarded by the Manager.)*

Wherever connection to existing mains is to be made, the design of the thrust block shall include structural steel struts in connection with reinforced concrete thrust blocks as shown in the Standard Details. Concrete thrust beams shall be constructed at the valves of all branch lines and dead-end lines that are to be extended in the future. The thrust beams shall be constructed in conjunction with a reversed bell pipe when installed at valves and shall be in accordance with the Standard Details. In instances where the valves are secured by means of metal strap and concrete, the thrust beam may be eliminated. Thrust beams may also be required at flanged by bell adaptors.

104.05 RIPRAP OVER TRENCH.

In unpaved areas, riprap shall be constructed over water main trenches wherever the slope and condition of the ground warrant such construction. The design of the riprap shall be furnished by the engineer who prepared the plans and shall be as shown on the plans. Whether shown on the plans or not, the Manager may require riprap wherever ground conditions warrant such construction.

104.06 AIR RELIEF VALVES/COMBINATION AIR VALVES.

Air relief valves/combination air valves or combination of two ARVs shall be installed at high points in the main or as otherwise required by the Manager. Required sizes of ARVs shall be as shown in Table 100-16:

Table 100-16 - REQUIRED SIZES AND NUMBER OF AIR RELIEF VALVES		
Main Size	ARV	Number of ARV
16-inch mains and smaller	¾-inch *(Oahu and Maui only)*	One
18-inch mains and smaller	1-inch *(Hawaii and Kauai only)*	One
18-inch mains	1-inch *(Maui Only)*	One
20-inch to 30-inch mains	2-inches	One
36-inch mains and larger	2-inches or as directed by the Manager	2

At dead-end streets, where water main terminates at a high point, ARV shall be installed at the end of the line. The working pressure shall be designated on the plans where ARVs are required. For continuous uphill grades, ARVs shall be installed at a maximum of 2,000 feet apart. Install ARVs on level runs of main at zero percent slope.

Where ARVs are located below the high water line or flood level, waterproofed manholes and vertical check valves shall be installed to prevent any backflow of the ground water into the water system.

104.07 BLOWOFF LINES.

Where required by the Manager, blowoff lines shall be installed. The blowoff lines will normally be required on long transmission mains to provide a means for flushing out the line. The blowoff line shall be installed in such a manner and at such location as to preclude backflow.

104.08 CLEANOUTS.

A. Permanent Cleanouts. A permanent cleanout shall be installed at the terminal point of all dead-end lines except where a fire hydrant is installed *(for Hawaii only, cleanouts are required regardless of fire hydrant installation)*. Size of cleanout shall be as shown in the Standard Details. *(For Oahu only: Install valve boxes for permanent cleanouts.)*

B. Temporary Cleanouts. A temporary cleanout shall be installed to facilitate disinfecting and flushing of any part of the water system. Size of temporary cleanout for disinfection and flushing shall be as shown in the Standard Details.

SECTION 105 - STRUCTURES

105.01 GENERAL.

All proposed work shown on plans submitted to the Manager for approval shall be designed according to these Standards unless directed otherwise by the Manager. All work shall comply to all applicable federal, state and county rules and regulation.

105.02 APPROVAL.

Approval of plans by the Manager is based solely on the adequacy of the water supply. Approval shall also be based on the type of structure: prestressed, reinforced concrete, steel, masonry, or wood, etc., as designated on the plans. Soil stability, structural stability, and drainage design shall be the responsibility of the engineer who prepared the plans.

105.03 DRAINAGE SYSTEM.

Site shall be drained of excess water, including overflow and washout from reservoirs, and shall be discharged into the County's storm drain system or an approved drywell or receiving system. Where a County storm drain system is not available, the drainage may traverse other properties, provided perpetual drainage and or flowage easements are obtained from the property owners affected by the drainage water.

105.04 ACCESS ROAD.

Provide a paved access road with the following parameters:

1. Minimum width of pavement 12-feet *(10-feet minimum for Hawaii only)*.

2. Maximum grade of 20%.

3. Asphalt concrete pavement on grades up to 12%. Install concrete headers at edges of AC pavement.

4. Reinforced concrete pavement on grades in excess of 12%.

5. Where vehicle must stop to open gates: 10% Maximum grade.

105.05 ACCESS ROAD GATE.

On access roads not enclosed with fences, provide a gate approved by the Manager to prevent unauthorized vehicles from entering the road. Provide means for attaching padlock which will be furnished by the Department.

105.06 LANDSCAPING.

The plans for water facility sites shall include provisions for landscaping, planting, irrigation system, and maintenance. Landscaping shall follow xeriscaping principles. All landscaping shall minimize the use of and impact on the potable water supply.

105.07 ACOUSTICAL REQUIREMENTS.

The station shall be acoustically designed in compliance with all Land Use Ordinance (LUO), OSHA and State Department of Health requirements.

105.08 PERIMETER FENCE.

Provide a 6-foot high fence around perimeter of property and gate for driveway and security devices as specified by the Department.

105.09 DRAINAGE EASEMENTS.

When water from the site is discharged over properties other than public streams or storm drains, the plans shall indicate a drainage easement and flowage easement up to a natural waterway or drainage system to be granted to the Department.

The Department shall be held free and clear of all damages, liabilities and/or litigations arising from:

1. Discharge of water from the reservoir and deep well drainage system.

2. Surface runoff from the water facility sites.

3. Design and sizing of drainage system and/or structures outside the Department's property.

4. Maintenance of downstream waterway and/or conduits outside the property of the Department.

In the event future developments are affected by the downstream waterways and/or conduits, the waterways and/or conduits shall be modified, adjusted, or relocated by the landowner at no cost to the Department. All such plans shall be submitted to the Manager for review.

For projects constructed by the Department, drainage and flowage easements will be obtained by the Department and included on the plans.

All such drainage systems shall conform to applicable drainage standards.

105.10 RESERVOIRS.

A. Size. Size of reservoir shall be designed to store sufficient water to insure a reliable supply of water, maintain adequate pressures and an economical water system. Unless otherwise approved, standard sizes shall be 0.10 MG, 0.20 MG, 0.25 MG, 0.30 MG, 0.50 MG, and 1.0 MG; thereafter, sizes shall be in multiples of 0.50 MG.

When there are two or more reservoirs or pumps serving the same service zone, the design shall be made on the basis of combined protection provided by all facilities available.

B. Type. Reservoir shall be reinforced concrete, prestressed concrete, or post-tensioned concrete, or as specified by the Department.

C. Influent-Effluent Line. Where practicable, the influent-effluent lines shall enter the reservoir through the access road. Where the influent-effluent line traverses rough country or otherwise be inaccessible to maintenance vehicles, a pipeline maintenance road shall be constructed.

D. Washout Line. Washout line shall be provided to empty the reservoir within 12 hours. Where washout flows are not allowed into drainage way, a pump connection shall be provided instead of an outfall.

E. Overflow Line. Overflow line shall be provided for each reservoir to prevent damage to the reservoir and allow proper discharge of water due to malfunction of controls. A reservoir's designated elevation shall be the overflow elevation.

Provide flap valve at the end of the overflow line. *(For Maui only: Stainless steel screen may be used in lieu of a flap valve with the approval of the Manager.)*

F. Washdown Connection. Washdown connection shall be provided to enable hosing the reservoir for cleaning. Connection is required at:

1. Reservoir site on the source side of the shutoff valve to the reservoir.

2. Exception - Washdown connection is not required when an emergency pumping connection is installed at the reservoir site where hose connection may be made for the water source.

G. Instrument Pressure Line. Provide a one-inch copper line from the reservoir side of washout valve to the pressure recording instruments.

H. Sampling Line. Provide a copper sampling line with a hand valve control and spigot. Outlet shall be installed as specified on the plan.

I. Perimeter Road. Provide a perimeter road around the reservoir with a minimum 10-foot width measured outwards from edge of footing to edge of road. Finish grade of road shall be at 2 inches minimum below the top of the footing and sloped to drain away from the reservoir.

J. Access to Reservoir. If access roads are to be constructed for the exclusive use of the Department, fee simple title shall be provided.

If access to the reservoir is through private roads which will be used by others and the Department, right-of-entry and access easements for use by the Department shall be provided. The Department will not be responsible for the maintenance of the roadway beyond the necessary repairs caused by its operations.

K. Blowoff Lines. A blowoff line shall be installed on reservoir effluent line to drain the reservoir to an approved drainage system. The size of the blowoff line shall be capable of draining the reservoir in 12 hours.

L. Chlorination Line. Provide a PVC line with all plastic ball valve suitable for injection of chlorine into the reservoir. Injection point and valve shall be installed as specified on the plan.

M. Painting. All exterior reservoir surfaces shall be painted. *For Maui, Hawaii and Kauai: All interior reservoir wall, columns, and floor surfaces shall be painted as specified in these standards.*

N. Floor Cement Topping. *For Oahu and Kauai Only. All reservoirs floor shall have a cement topping as shown on the plans and as specified in this Standards.*

O. Exterior and Interior Ladders. Exterior and interior ladders shall conform to OSHA requirements.

105.11 CORROSION PROTECTION.

Corrosion protection shall be provided for buried pipelines as specified in Division 500 of the Water System Standards as applicable to the project. Steel reservoirs and submerged metallic structures in concrete reservoirs shall have corrosion protection, such as adequate coatings, etc. The corrosion protection design shall be approved by the Manager.

SECTION 106 - MECHANICAL AND ELECTRICAL

106.01 GENERAL.

Booster pump stations shall be equipped with a minimum of two pumping units, one of which shall be a standby unit equal in capacity to the largest of the main pumping units.

106.02 PUMPS.

Pumps shall be of the horizontal centrifugal, submersible or vertical turbine type. Pumps should be rated at or near the maximum efficiency for that pump to deliver water. Line shaft deep well turbine pumps shall be water lubricated. Petroleum based lubricated lineshaft pumps will not be permitted.

106.03 MOTORS.

Motors shall conform to the latest Standards of NEMA and shall have ample capacity to operate the pumps under all head conditions without overloading. Motor shall have a service factor of 1.15.

106.04 INSTRUMENTATION.

Indicating and recording instruments and appurtenances shall be provided for suction and discharge pressures, flow rates, water level in wells, reservoir levels, watt hour meter, ammeter, volt meter, power factor and any other important station parameters.

106.05 CHLORINATORS.

Source pump stations shall be equipped with a minimum of two chlorinators, one of which shall be a standby unit equal in capacity to the largest of the main chlorinators. Chlorinators and chlorinator rooms shall be in conformance with the latest fire code and OSHA requirements.

106.06 SHUTOFF VALVES.

Shutoff valves shall be installed to allow for maintenance and repair of equipment without disruption of service.

106.07 FLOW METERS.

Flow meters shall be installed at all pump stations and at locations required by the Manager.

SECTION 107 - BACKFLOW PREVENTION ASSEMBLY

107.01 GENERAL.

The authority for enforcing the Department's cross-connection control and backflow prevention program is derived under the Department's "Rules and Regulations." This program shall be further guided and enforced by any or all applicable Federal laws, State statutes or regulations and local County Ordinances or Codes. All backflow prevention assemblies shall be approved in accordance with the University of Southern California's Foundation for Cross-Connection Control and Hydraulic Research.

For Oahu only: All backflow prevention assemblies that vent to atmosphere, which are located within a Flood Hazard District, as delineated on the Flood Boundary and Floodway Maps, and Flood Insurance Rate Maps, shall be at least one foot above the regulatory flood elevation. If these backflow prevention assemblies cannot be located at least one foot above the regulatory flood elevation, the Manager must approve any alternatives installations.

107.02 REQUIREMENTS FOR NON-SPECIFIED FACILITIES.

The facilities and the backflow prevention requirements specified under Section 107.03 - REQUIREMENTS FOR BACKFLOW PROTECTION have been listed for the consumer's convenience. For facilities that are not listed, the same requirements for a similar specified facility shall be followed. Should a similar specified facility not be listed, the Department shall determine the required backflow prevention assembly.

107.03 REQUIREMENTS FOR BACKFLOW PREVENTION.

The specific requirements for cross connection and backflow prevention installation as specified in Division 300, Section 305 - BACKFLOW PREVENTION ASSEMBLIES are as follows:

Table 100-17 - BACKFLOW PREVENTION REQUIREMENTS			
	Backflow Prevention Assembly		
Facility	Pressure Vacuum Breaker (Includes Spill-Resistant Pressure Vacuum Breaker)	Double Check Valve Assembly	Air Gap or Reduced Pressure Principle Backflow Preventer
Aircraft, Airport Facilities and Missile Plants			X
Agricultural Activities			X
Automotive Plants			X
Auxiliary Water Systems (Private Wells, Sewage Effluent, Used Waters, Reclaimed Waters (Regardless of Classification), Industrial Fluid Systems)			X
Beverage Bottling Plants			X
Buildings - (Hotels, Apartments, Commercial, Industrial, Public and Private Buildings) and Warehouses			X
Canneries, Packing Houses and Reduction Plants			X
Car Wash Facilities			X
Chemical Plants - Manufacturing, Processing, Compounding or Treatment			X
Chemically Contaminated Water System - Premises where chemicals used as additives with water in processes.			X
Civil Works - Federal, State, City, County and District Yards; Docks and Facilities; Military Camps, Posts, Stations, Public Buildings, and Facilities			X
Construction Activities			X
Dairies and Cold Storage Plants			X
Dual/Nonpotable Water Systems			X

Table 100-17 - BACKFLOW PREVENTION REQUIREMENTS (cont.)			
	Backflow Prevention Assembly		
Facility	Pressure Vacuum Breaker (Includes Spill-Resistant Pressure Vacuum Breaker)	Double Check Valve Assembly	Air Gap or Reduced Pressure Principle Backflow Preventer
Fire Systems			
CASE I. No chemical added to system or no auxiliary source involved.		X[1]	*X (For Kauai Only)*
CASE II. A system containing antifreeze, rust or corrosion inhibitors fire retardants, or other chemicals utilizing auxiliary source			X
CASE III. A system with a fire department connection to the system riser.		*X (For Hawaii Only)*	
1 - Minimum requirement is a single check valve if fire protection system is not connected to a DC meter. *(For Maui only: Minimum requirement is a double check Detector Assembly.)*			
Golf Courses			X
Medical Buildings, Hospitals, Animal Hospitals, Animal Clinics, Sanitariums, Dental Clinics, Morgues, Mortuaries, Autopsy Facilities, Nursing and Convalescent Homes			X

Table 100-17 - BACKFLOW PREVENTION REQUIREMENTS (cont.)			
	Backflow Prevention Assembly		
Facility	Pressure Vacuum Breaker (Includes Spill-Resistant Pressure Vacuum Breaker)	Double Check Valve Assembly	Air Gap or Reduced Pressure Principle Backflow Preventer
Irrigation Systems - Premises having separate systems (i.e., Parks, Playgrounds, Cemeteries, Golf Courses, Schools, Estates, Ranches, etc.) CASE I. No fertilizer or chemical added to system *For Kauai Only: RPs only* CASE II. Irrigation system equipped with pumps, injectors, pressurized tanks or vessels used for adding pesticides or other chemicals into the system; irrigation systems subject to contamination from submerged inlets, auxiliary water supplies, ponds, and other sources of contaminated waters. *2 - For Kauai Only: RPs only; For Maui Only: Air gaps only*	*X (Excluding Hawaii)*	X	*X (For Maui Only)* X[2]
Laundries and Dye Works			X
Metal Manufacturing, Cleaning, Processing, Fabricating, and Plating Plants			X
Motion Picture Studios and Film Laboratories			X
Multi-family Master Metered Developments (PDH's, Clusters) 3 - Property must not be in an area that uses nonpotable or reclaimed water as an auxiliary source.		*X[3] (For Oahu Only)*	X

Table 100-17 - BACKFLOW PREVENTION REQUIREMENTS (cont.)			
	Backflow Prevention Assembly		
Facility	Pressure Vacuum Breaker (Includes Spill-Resistant Pressure Vacuum Breaker)	Double Check Valve Assembly	Air Gap or Reduced Pressure Principle Backflow Preventer
Multiple Services - Interconnected			X
Oil and Gas Production, Storage or Transmission Properties			X
Paper and Paper Products Plants			X
Power Plants			X
Radioactive Materials or Substances - Plants or Handling Facilities			X
Restricted, Classified or Other Closed Facilities			X
Rubber Plants - Natural and Synthetic			X
Sand and Gravel Plants and Quarries			X
Schools and Colleges			X
Separate Pressure Water Systems Utilizing Booster Pumps or Separate Storage Facilities			X
Shopping Centers and Other Multi-Tenant Buildings			X
Swimming Pools			X
Wastewater Facilities			X
Water Front Facilities and Industries			X

SECTION 108 - WELL DRILLING

108.01 GENERAL.

In order to comply with the requirements of the State Water Code, Chapter 177, HRS, titled, "Ground Water Use", Chapter 178, HRS, titled, "Wells, Generally", and the Department's requirements on well locations, yield, size and spacing, the developer's engineer shall consult the Manager prior to proceeding with detailed plans and specifications.

SECTION 109 - LANDSCAPING AND IRRIGATION

109.01 GENERAL.

All Departments' facilities such as reservoirs, pump stations, well sites, etc., shall be landscaped with an irrigation system as specified by the Manager. All landscaping shall utilize xeriscaping principles by specifying plants that will thrive in the natural environment of the project location. All landscaping and irrigation shall make efficient use of water.

SECTION 110 - PLANNED DEVELOPMENTS

110.01 INTRODUCTION.

Unless otherwise approved by the Manager, all planned developments with private water systems shall have master domestic water meters with backflow devices and fire meters. All developments are subject to backflow prevention and cross connection requirements. These guidelines have been developed to assist consulting engineers or developers of cluster or planned development type of projects in the design of water system requiring approval of the Manager. While these criteria are not intended to readily adapt to each situation, the engineer's ultimate aim should be directed toward providing an adequate water system for both domestic and fire fighting purposes. However, all plans showing water systems shall be subject to review and approval by the Manager.

The water system for the development shall meet the requirements of these Standards and as further clarified by these guidelines.

110.02 PLANS.

To facilitate review and approval, all plans submitted shall comply with Section 112 - CONSTRUCTION PLANS of these Standards.

110.03 FIRE HYDRANTS.

A. Spacing. Where a development has master water meters on its perimeter, and where no Department's water mains go through the private property, the Developer shall be responsible for providing adequate fire protection within the development. The on-site fire protection improvements shall be verified and coordinated with the nearest County Fire Department.

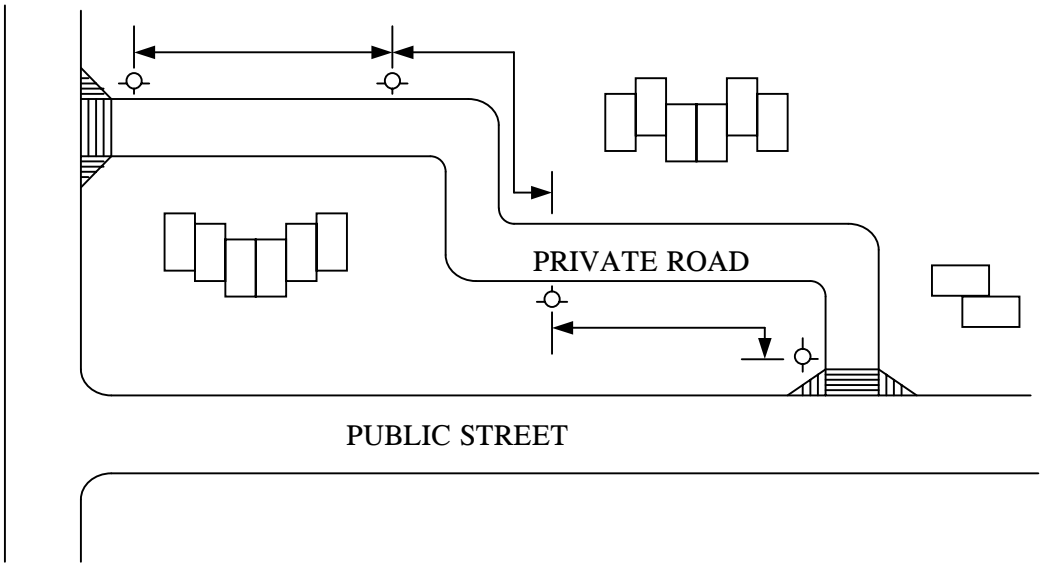

Maximum spacing of fire hydrants for the various types of communities is listed in Table 100-19. Fire hydrant spacing is measured along the roadway and not straight-line, point-to-point or across the lot.

B. Accessibility. Unless otherwise noted, accessibility to fire hydrants shall be as follows:

1. Minimum width of driveways to hydrant shall be 15 feet unobstructed. Driveways shall be paved.

2. Maximum grade to hydrant, 20%.

3. Minimum radius of edge of pavement or curbs for driveways and roadways, 35 feet.

4. Minimum vertical clearance, 14 feet above pavement.

5. Minimum horizontal distance between buildings for access, 12 ft.

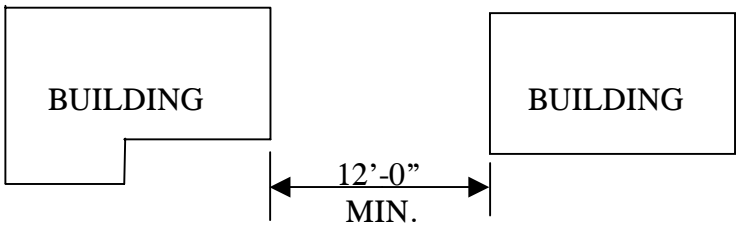

6. For parallel parking, 5 feet *(10 feet for Maui)* on each side. For perpendicular parking, dimension of curb guard as shown.

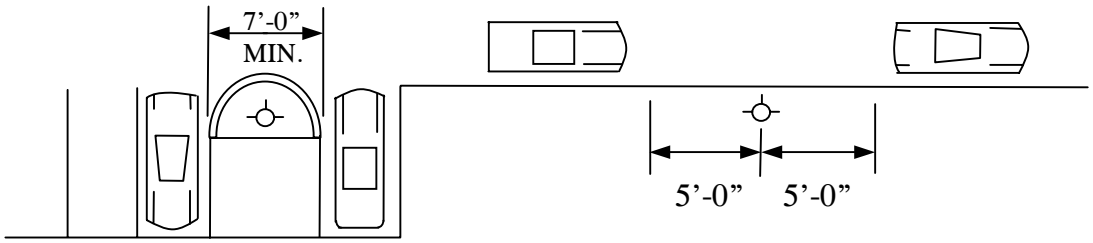

7. Minimum distance of hydrant to wall or building shall be 3 feet for the hydrant operating wrench clearance.

8. Setback of hydrant behind guardrail shall be a minimum of 5 feet clear.

9. Maximum distance of hydrant shall be 8 feet from the curb or pavement.

110.04 WATER MAINS.

A. Unpaved Areas. In looped main where pipe goes through unpaved areas, the line shall be accessible for maintenance purposes with a valve on each end.

B. Paved Traveled Areas. Mains should be installed in paved traveled area to roadways. Avoid parking areas as much as possible.

C. Off Roadways. Where main is installed off the roadways of the development, a pipeline maintenance access road shall be provided.

110.05 DRAINAGE.

Area drainage to accommodate water from broken mains or hydrants shall provide for maximum flow from broken main or hydrant. Flow of 1500 gallons per minute is minimum expected flow.

110.06 FIRE FLOW.

Fire flow requirements shall be as noted in Section 111.03 - FIRE FLOWS, DURATION AND HYDRANT SPACING of these Standards.

110.07 SECOND FEED.

For developments with 100 or more subdivided lots, provide a second feed to the subdivision's water system unless otherwise approved by the Manager.

SECTION 111 - WATER REQUIREMENTS

111.01 GENERAL.

These standards of planning are not intended to limit the initiative and resourcefulness of the engineer in developing water system plans but they shall be viewed as the minimum limits in design criteria. The water system shall be designed to meet the needs of the community for a reasonable number of years in the future.

111.02 DOMESTIC CONSUMPTION GUIDELINE.

The guidelines for water consumption which should provide an adequate water system are listed in Table 100-18. These guidelines may be revised by the Manager based on variable factors that influence water consumption rates.

111.03 FIRE FLOWS, DURATION AND HYDRANT SPACING.

The fire flows considered as the minimum by the Department are shown on Table 100-19 subject to the following considerations:

1. For residential areas, required fire flow will depend on the character and congestion of buildings.

2. For business, industry, and shopping centers the required flow depends on the bulk, congestion, fire resistance and contents of buildings.

Additional for Maui only: Supplemental to the above, fire hydrants and necessary pipelines and appurtenances may be required by the Department as deemed necessary for adequate fire protection for structures in any land use or zoning district. The Standard of the Insurance Services office's Guide for Determination of Required Fire Flow shall be used as a guide in designing mains for fire flow requirements.

111.04 SYSTEM CAPACITY.

The capacity of the distribution system shall deliver the maximum daily demand simultaneously with the required fire flow.

The distribution system shall also deliver the peak hour flow (without fire flow).

For Maui Only: For surface water systems, the demand shall not exceed 80% of the average daily inflow from the source.

111.05 DEMAND FACTORS.

Table 100-20 lists the demand factors.

Table 100-18 - DOMESTIC CONSUMPTION GUIDELINES				
AVERAGE DAILY DEMAND*				
ZONING DESIGNATION	HAWAII	KAUAI	MAUI	OAHU
RESIDENTIAL:				
Single Family or Duplex	400 gals/unit	500 gals/unit	600 gals/unit or 3000 gals/acre	500 gals/unit or 2500 gals/acre
Multi-Family Low Rise	400 gals/unit	350 gals/unit	560 gals/unit or 5000 gals/acre	400 gals/unit or 4000 gals/acre
Multi-Family High Rise	400 gals/unit	350 gals/unit	560 gals/unit	300 gals/unit
COMMERCIAL:				
Commercial Only	3000 gals/acre	3000 gals/acre	6000 gals/acre	3000 gals/acre
Commercial/Industrial Mix	--	5000 gals/acre	140 gals/1000 sq. ft.	100 gals/1000 sq. ft.
Commercial/Residential Mix	--	3000 gals/acre	140 gals/1000 sq. ft.	120 gals/1000 sq. ft.
RESORT (To include hotel for Maui only)	400 gals/unit (1)	350 gals/unit	350 gals/unit or 17000 gals/acre	350 gals/unit or 4000 gals/acre
LIGHT INDUSTRY:	4000 gals/acre	4000 gals/acre	6000 gals/acre	4000 gals/acre
SCHOOLS, PARKS:	4000 gals/acre or 60 gals/student	4000 gals/acre or 60 gals/student	1700 gals/acre or 60 gals/student	4000 gals/acre or 60 gals/student
AGRICULTURE:		2,500 gals/acre	5000 gals/acre	4000 gals/acre

* - Where two or more figures are listed for the same zoning, the daily demand resulting in higher consumption use shall govern the design unless specified otherwise.

(1) - Subject to special review and control by the Manager.

Table 100-19 - FIRE FLOW REQUIREMENTS				
LAND USE	FLOW (GPM)/DURATION (HRS)/FIRE HYDRANT SPACING (FT.)			
	HAWAII	KAUAI	MAUI	OAHU
Agriculture	500/0.5/600 (1)	250/1/500	500/2/500	1000/0.5/700
Rural			1000/2/500	
Single Family	(2)	(4)	1000/2/350	1000/1/350
Duplex	1500/1/300	(4)	1250/2/350	1000/1/350
PUD Townhouse and Low Rise Apartments	1500/1/300	(4)	(5)	1500/1/250
Schools, Neighborhood Businesses, Small Shopping Centers, Hotels (except Maui), and High Rise Apartments	2000/2/300	2000/2/350	2000/2/250	2000/2/250
Light Industry, Downtown Business, Large Shopping Center, and Hospitals	2,000/2/300	3000/3/350	2000/2/250	4000/3/250
Heavy Industry, Hotels	2,000/2/300	3000/3/350	2,500/2/ 250	(3)

(1) - Applies to one acre lot size or less
(2) - 10,000 sq. ft. or larger lot size = 500/2/600; Less than 10,000 sq. ft. lot size = 1000/1/600
(3) - Subject to special review and control by Manager
(4) - R-2 = 500/1/500 R-4 = 750/2/500 R-6 = 1000/2/500 R-10 = 1250/2/350
R-20 = 1500/2/350 RR-10 = 1500/2/350 RR-20 = 2000/2/350
(5) - A-1 = 1500/2/250 A-2 = 2000/2/250

Note:
1. On dead end streets, the last F.H. shall be located at one half the spacing distance for F.H.s from the last house/unit (frontage property line or to the driveway/access for the property).
2. Spacing of fire hydrant shall be measured along the roadway.

Table 100-20 - DEMAND FACTORS		
Island	Maximum Daily Demand	Peak Hour
Hawaii	1.5 x Average Day	5.0 x Average Day
Kauai, Maui, Oahu	1.5 x Average Day	3.0 x Average Day

111.06 PIPELINE SIZING.

Pipelines shall be sized to meet the following requirements:

1. Maximum daily flow plus fire flow with a residual pressure of 20 psi at critical fire hydrant.

2. Peak hour flow with a minimum residual pressure of 40 psi.

3. In determining the carrying capacity of the mains, the "C"* values to be applied are shown in Table 100-21.

Table 100-21 - "C"* FACTORS	
Pipe Diameter (In.)	"C"
4", 6"	100
8", 12"	110
16", 20"	120
24" and Larger	130

* Not for metallic non-cement lined pipe.

4. Maximum velocity in distribution main (without fire flow) is 6 feet per second.

5. *For Maui Only: In addition, the maximum velocity in mains shall apply as follows:*

   a. *Distribution mains - 10 feet per second with fire flow at max day domestic flow.*

   b. *Transmission mains without water services or fire flow - 20 feet per second.*

   c. *Fire lines - 13 feet per second.*

6. *For Hawaii Only: Maximum velocity in distribution mains with fire flow shall be 10 feet per second.*

7. Unless specified otherwise, maximum static or pumping pressure, whichever is greater, shall not exceed 125 psi.

8. *For Oahu Only: Minimum diameter of influent-effluent line from booster pump to reservoir shall be 12-inches.*

111.07 RESERVOIR CAPACITY.

Reservoir shall be sized as follows:

1. Meet maximum day consumption. Reservoir full at the beginning of the 24-hour period with no source input to the reservoir.

2. Meet maximum day rate plus fire flow for duration of fire. Reservoir 3/4 full at start of fire, with credit for incoming flow from pumps, one maximum size pump out of service.

3. Minimum size reservoir shall be 0.1 MG. Reservoir size shall be as specified in Section 105.10 - RESERVOIR, Subsection A - Size.

Where there are two or more reservoirs serving the same system, the design shall be made on the basis of combined protection provided by all facilities available.

111.08 TOTAL PUMP CAPACITY.

The total pump capacity for each site shall be based on the criteria that yields the maximum pumpage. The criteria for each island is as shown on Table 100-22.

Table 100-22 - TOTAL PUMP CAPACITY CRITERIA	
Island	Total Pump Capacity Criteria At Each Site
Hawaii	2
Kauai	5[a]
Maui	1, 3, 4[a]
Oahu	1, 3[a], 4[a]

a - The largest pumping unit shall be considered out of service (standby).

Criteria

1. Meet maximum day demand with an operating time of 16 hours simultaneously with maximum fire flow required independent of the reservoir. The standby unit may be used to determine the total flow required.

2. Meet average day demand with an operating time of 16 hours or meet maximum day demand with an operating time of 24 hours with larger pump unit on standby and not contributing to flow requirements.

3. Maximum day demand during the duration of fire plus fire demand less 3/4 of reservoir storage.

4. Meet maximum day demand with an operating time of 16 hours.

5. Meet maximum day demand with an operating time of 24 hours.

SECTION 112 - CONSTRUCTION PLANS

112.01 GENERAL.

All proposed work shown on plans submitted to the Manager for approval shall be designed according to these Standards.

All construction plans shall be prepared, signed, and stamped by professional engineers, licensed under the State of Hawaii, to the extent of his professional qualifications under the laws of the State.

In matters of engineering judgment, the Manager's decision will be final.

Approval of plans by the Manager is based solely on the adequacy of the water system. Approval shall also be based on the Water System facilities and appurtenances. In the event a design change material is contemplated, thereafter, and if the project is not under construction within a period of one year *(for Oahu only: two years),* the plans shall be resubmitted to the Department for review, re-approval and changes, as it deems proper because of changed conditions or revision of Standards. All other features of the water system such as lines, grades, slope stability, fittings, etc., and other features of improvements shall be the responsibility of the engineer who prepared the plans. Drainage within water facility site, and other features of the improvements shall also be the responsibility of the engineer who prepared the plan.

112.02 PLANS.

Unless otherwise approved by the Manager the construction plans, insofar as the water system is concerned, shall be of polyester tracing film (4 mil thick mylar sheets) *(for Oahu only: xerographic vellum)*, matte on both sides, and shall show the following on standard size sheet or sheets, measuring 24" x 36" overall *(for Kauai only: 22" x 36" overall)* with no exceptions. Drawings and title sheets shall be in ink or photo mylars ("sticky-backs are not acceptable"). *(For Oahu only: Minimum lettering size shall be 1/8-inch.)*

The construction plans submitted for approval shall include the following minimum requirements.

1. Name of project or subdivision, name of engineer with engineer's signature and stamp affixed thereon, appropriate approval signature blocks and location map of project.

2. North arrow, graphic scale, tax map key.

3. The proposed project, type of development such as single family, clusters, high-rise, commercial, industrial, one-lot development, utility improvements and others, number of units and living stories. Complete with both plan and profile, and its inter-relationship with street lines, lot lines, curb grades, sewers and drains, electrical, gas, cable, communication lines, both existing and proposed conditions, as well as any other features natural or artificial necessary for a complete understanding of the water system design.

4. Plan views drawn to a scale of one inch equals 40 feet or one inch equals 20 feet. Profile views drawn to a vertical scale of one inch equals 4 feet or larger to USGS datum. Plan and profile shall be drawn on the same sheet where practicable, with profile stationing running from left to right.

5. Main location and size, to include profile view of main and meter connection and all material call outs.

6. The designation, including alignment, width and area, of all easements for parts of the water system which will not be in street areas to be dedicated to the public.

7. A general layout map with an appropriate scale showing the locations of lot, lot numbers, access to property (show ingress and egress), rights-of-way, easements, roadways, property pins, and streets within the project and its near vicinity together with existing and proposed utilities and its appurtenances. Show phasing of water system construction as applicable.

8. A small key location inset or vicinity map showing the proposed project in relationship to streets and water mains in the area.

9. Applicable Water Notes to include test pressure for water main.

10. Building, streets, and lot layouts. Plans shall show location of access to property, all existing conditions, and existing fire hydrant locations with numbers. All utilities shall be labeled as existing or new. All street names shall be labeled as existing or proposed new City, State, Federal, Private or Private City Maintained roadways.

11. Lettering size shall be readable when reduced 50 percent.

12. The Manager's signature block shall be shown on the construction plans as follows:

    a. *For Maui and Hawaii: Title sheet only.*

    b. *For Kauai: Title sheet and all applicable interior water related sheets.*

c. *For Oahu: Title sheet for subdivisions or new water facilities projects (wells, booster stations and reservoirs) only. Provide signature block for Manager's designated official for water notes sheet, detail sheets and all other appropriate sheets where work is to be done near or along the water system. Signature blocks for City projects may not be required and shall be verified with the latest requirements of the City Department of Planning and Permitting.*

13. Easement lines on plan and profile. Provide dimensions and area of the easement to be granted to the applicable Department or Water Board (Hawaii).

14. Applicable details only if they deviate from the latest water system standard details.

15. Plan and profile shall provide the following:

    a. Existing and new main locations and sizes including meter connections and utilities. Existing waterlines and utilities must be in light or hidden lines and new utilities must be in solid or thicker lines for distinction.

    b. All material call-outs including bends and fittings with concrete blocks or beams, as required, and valves with station numbers.

    c. Show existing and new finish grade lines, valves, 3-inch and larger meter and fire hydrant pipe inverts on profile views.

16. For existing and new water services:

    a. Locations of all new and existing water meter boxes within the project limits serving the specified lot(s) that are affected by the project and indicate meter numbers on plans. (The meter numbers are located on top of or underneath the meter dial cover) Laterals from meter box to existing or new main.

    b. Size of existing and new laterals and meters and provide Flow Requirements that include existing and additional fixture units (FU), gallons per minute (GPM), gallons per day (GPD) and the Department's estimate of applicable charges. *(For Oahu only: All information shall be shown on the construction plans.)*

    c. Existing and/or new approved backflow preventers after domestic meters, after property valves but prior to any tees and branches.

    d. For new 3-inch and larger meter connections, provide plan and profile views of lateral from main to property or backflow preventers.

e. Laterals to be cut and plugged at main; meters, valve boxes, manholes and meter box frames and covers to be removed and salvaged.

f. The installation, chlorination and testing of the water main and facilities after the meter(s) shall not be the responsibility of the Department.

When submitting for approval, four sets (six sets for new facilities) of construction plans and specifications along with a transmittal letter (indicating what is being submitted and person to contact with phone numbers) shall be submitted. *(For Oahu Only: Initial submittals shall be coordinated with the City and County of Honolulu, Department of Planning and Permitting.)*

112.03 MISCELLANEOUS SUBMITTALS.

For Oahu Only: Submit the following as applicable to the new onsite or offsite water system improvements:

1. One set of fire flow calculations for plans showing new on-site fire hydrant installations off an existing or new detector check or FM meter. Fire flow calculations shall be for the most critical fire hydrant and shall meet the minimum requirements in Section 111.03 - FIRE FLOWS, DURATION AND HYDRANT SPACING and Table 100-19.

2. Two sets of soils report showing the soil resistivity test results and rating for new waterlines exceeding 500 linear feet of new pipes only. The report shall include recommendations and calculations for the corrosion design and type of anodes to be used. Plans shall include applicable corrosion designs.

3. Two sets of soils or geotechnical survey report, drainage report, and structural calculations for new structures and facilities to be dedicated to the Department.

4. Six sets of project specifications and special provisions for new reservoirs, booster stations, wells and other structures.

5. Copy of latest approved master plan. The size and layout of water mains shall be in accordance with the approved master plans for new subdivisions.

6. For new subdivisions, transmission mains, reservoirs, wells, booster stations and other larger water system improvements, submit a preliminary cost estimate for construction of all water systems prior to approval of plans.

112.04 SUBMITTALS PRIOR TO CONSTRUCTION.

For Oahu only: The Department's Maintenance Unit – Engineering, Construction Section shall be notified in writing one week prior to commencing work on the water systems. For improvements that require work on the water systems and inspection from the Department, four (4) sets of approved construction plans and specifications shall also be submitted to the Department one week prior to commencing work. Specifications are required for new structures and facilities only. All notifications must be in writing and shall include information on the Contractor's, contact person's name and phone numbers and approximate date, the work on the water systems will begin.

112.05 SUBMITTALS DURING CONSTRUCTION.

Six sets of shop drawings reviewed, stamped and signed by the design engineer shall be submitted to the Department for review and approval prior to construction and/or fabrication of materials. See Division 200 - MATERIALS and Division 300 - CONSTRUCTION for other submittals required during construction.

112.06 AS-BUILT CONSTRUCTION PLANS.

Upon completion of construction of a project, as-built construction plans and tracings shall be submitted to the Department. Tracings shall be as specified in Section 112.02 - PLANS.

1. The Licensed Professional Engineer shall make all necessary corrections on the tracings to reflect all construction changes, alterations and/or deletions, other than formal approved revisions already shown on the construction plans. Additional tracings of any working or shop drawings approved by the Manager shall also be included for filing.

2. All corrections shall be in permanent-type red ink darkened with permanent black ink (approximately one-part black to five-part red).

3a. The word "AS BUILT" shall be labeled on the title sheet and certified by the Licensed Professional Engineer as to accuracy.

AS-BUILT TRACINGS

Certified By: _____ Date: _____
Engineer

Approved By: _____ Date: _____
Manager

Label "AS-BUILT" on all sheets in the margin space left of the sheet number.

3b. In lieu of 3a, the words "RECORD DRAWING" shall be labeled on the title sheet and certified by the Contractor as to accuracy. The Licensed Professional Engineer shall formally submit the tracing.

RECORD DRAWING TRACINGS

Certified By: _____ Date: _____
Contractor
(Include name and company)

Submitted By: _____ Date: _____
Design Engineer

Approved By: _____ Date: _____
Manager

Label "RECORD DRAWINGS" on all sheets in the margin space left of the sheet number. All signatures and dates shall be in permanent black ink.

4. Tracings for filing must be of good quality and not subject to flaking, rubbing, or scraping off. Tracings for filing must also not exhibit or be subject to discoloration or distortion.

5. No "paste ons", especially for title blocks, water notes and engineer's stamp will be accepted.

6. All tracings and shop drawings shall bear the stamp or seal and the signature of the Licensed Professional Engineer in permanent black ink.

SECTION 113 - WATER MASTER PLAN

113.01 GENERAL.

A water master plan is defined as a plan describing the development of any property including all of the proposed water system improvements necessary to provide adequate water service to the development. All proposed work shown on the water master plan submitted to the Manager for approval shall be designed according to these Standards.

In matters of engineering judgment, the Manager's decision will be final.

Approval of plans by the Manager does not constitute a water commitment. Water commitment for the project shall be in accordance with the Department's Rules and Regulations.

113.02 PLANS.

The water master plan, insofar as the water system is concerned, shall show the following:

1. Name of project or subdivision, name of engineer, tax map key, location and acreage.
2. Type of development and number of units.
3. Access to property.
4. Elevations and contours of property based on mean sea level.
5. Building, street, and lot layout.
6. Estimated water demand in gallons per day.
7. Development and construction schedules.
8. Proposed water facilities.
9. Supporting calculations showing adequacy of water facilities during interim and ultimate development.

113.03 DEVELOPMENT BY PHASES.

If development of the project is to be done in phases over a period of time and the Standards are revised, or if there are changes in the type or layout of development proposed, the master plans shall be revised accordingly and resubmitted for review and approval by the Manager.

DIVISION 200 - MATERIALS

TABLE OF CONTENTS
DIVISION 200 - MATERIALS

SECTION		PAGE
201	GENERAL	201-1
202	DUCTILE IRON PIPE, FITTINGS AND APPURTENANCES	
202.01	General	202-1
	A. Fittings	202-2
	B. Polyethylene Encasement	202-3
	C. Corrosion Protection	202-3
	D. Interior Lining	202-3
	E. Exterior Coating	202-3
	F. Bolts and Nuts	202-3
202.02	Mechanical Joint	202-4
	A. General	202-4
	B. Fittings	202-4
202.03	Push-on Joint	202-4
	A. General	202-4
	B. Fittings	202-5
202.04	Flanged Joint	202-5
	A. General	202-5
	B. Fittings	202-5
202.05	Special Fittings	202-5
	A. Pipeline Couplings	202-5
203	CONCRETE CYLINDER PIPE AND FITTINGS	
203.01	General	203-1
	A. Steel Cylinder	203-1
	B. Interior Lining	203-1
	C. Exterior Coating	203-2
	D. Flanged Joints	203-2
	E. Water	203-2
	F. Guarantee	203-2
	G. Rejection	203-2
	H. Corrosion Protection	203-2
203.02	Pretensioned Concrete Cylinder Pipe	203-2
	A. General	203-2
203.03	Cement Mortar Lined and Coated Cylinder Pipe	203-4
	A. General	203-4

SECTION PAGE

203.04 Concrete Cylinder Fittings 203-5
A. General 203-5
B. Fittings 203-5
C. Reinforcement 203-5
D. Factory Testing of Steel Cylinder 203-6
203.05 Corrosion Protection 203-6

204 PLASTIC PIPE

204.01 Polyvinyl Chloride (PVC) C-900 & C-905 Pipe 204-1
A. General 204-1
B. AWWA C900 PVC Pipe 204-1
C. AWWA C905 PVC Pipe 204-2
D. Fittings 204-2
1. Ductile Iron Fittings 204-2
2. PVC Fittings 204-3

205 VALVES AND APPURTENANCES

205.01 General 205-1
205.02 Gate Valves 205-1
A. General 205-1
B. Valves Three (3)-Inch and Smaller 205-2
C. Metal-Seated Valves Four (4)-Inch and Larger 205-2
D. Resilient-Seated Gate Valves 205-3
1. General 205-3
205.03 Butterfly Valves and Manual Operators 205-4
A. General 205-4
B. Butterfly Valves 205-4
C. Manual Actuator 205-4
D. Manufacturer's Identification 205-4
E. Submittals for Approval 205-4
205.04 Tapping Valves and Sleeves 205-5
205.05 Ball Valves and Appurtenances 205-5
205.06 Air Relief Valves/Combination Air Valves and Appurtenances 205-6

SECTION PAGE

206 HYDRANT AND APPURTENANCES

206.01 General 206-1
206.02 Wet-Barrel Hydrants 206-2
206.03 Dry-Barrel Hydrants 206-2
206.04 Hydrant Markers 206-3

207 CAST IRON MANHOLE COVERS, FRAMES, RUNGS, EYEBOLTS, METER BOX AND VALVE BOX COVERS AND FRAMES, AND STANDPIPE

207.01 General 207-1
207.02 Manhole Covers and Frames 207-1
207.03 Manhole Rungs 207-2
A. Hot-Dip Galvanized or Stainless Steel Rungs 207-2
B. Steel Reinforced Copolymer Polypropylene Plastic Rungs 207-2
207.04 Eyebolts, Nuts, and Washers for Type "A" Manhole 207-2
207.05 Meter Box Covers and Frames 207-2
207.06 Valve Box Covers and Frames and Standpipes 207-3
207.07 Brass Plates 207-3

208 SERVICE LATERALS AND APPURTENANCES

208.01 Copper Tubing 208-1
208.02 Brass Pipe 208-1
208.03 Plastic Tubing 208-1
A. Polyethylene Tubing 208-1
B. Plastic Tubing Markings 208-3
208.04 Ball Corps 208-3
208.05 Ball Stops 208-4
208.06 Couplings 208-5
208.07 Service Saddles 208-5
208.08 Meter Box 208-6

SECTION PAGE

209 PREMOLDED FILLER, CRUSHED ROCK, PIPE CUSHION, BACKFILL MATERIAL AND BRICKS

209.01 Premolded Filler 209-1
209.02 Pipe Cushion 209-1
A. For Kauai, Maui and Oahu 209-1
B. For Hawaii Only 209-2
209.03 Crushed Rock 209-2
209.04 Backfill Material 209-2
209.05 Bricks 209-3

210 VALVE MARKERS, PIPE HANGERS, LATERAL BRACINGS AND INSERTS

210.01 Valve Markers 210-1
210.02 Pipe Hangers, Lateral Bracings, and Inserts 210-1

211 BRASS PRODUCTS

211.01 General 211-1

212 MISCELLANEOUS

212.01 Asphalt Seal for Reservoir Interior Perimeter 212-1
212.02 Asphaltum 212-1
212.03 Bitumastic Coating 212-1
212.04 Crystallization Products 212-2
212.05 Geotextile Fabrics 212-2
212.06 Petroleum Asphaltic Coatings (Factory Applied) 212-3
212.07 Wall Sliding Joint Material 212-3
212.08 Warning Tape 212-3
212.09 Waterstops 212-4

DIVISION 200 - MATERIALS

SECTION 201 - GENERAL

All materials incorporated into the system shall be furnished by the Contractor in accordance with the Water System Standards unless otherwise specified or approved by the Manager.

Materials are usually specified in terms of the latest applicable standard specifications of the American Society of Testing Materials (ASTM), American National Standards Institute (ANSI), American Water Works Association (AWWA), and General Services Administration Federal Specifications. Should the standard specifications noted in these Standards be in conflict with later revisions or amendments thereof, the Manager shall be consulted for the applicable standard specifications.

In some instances, materials are specified as acceptable items by means of the manufacturer's catalog designations or reference numbers rather than by detailed specifications. It should be clearly understood that such references are frequently changed by the manufacturer. For any modifications to the material and the identification number, the manufacturer shall resubmit the material for review and approval by the Manager prior to incorporation to the Water System Standards. For any changes to catalog designations, reference numbers and manufacturer’s name, a formal letter indicating such changes shall be submitted to the Manager. If any reference number is found to be obsolete, the Manager should be consulted for the latest designation.

Acceptable materials are listed in DIVISION 400 - APPROVED MATERIAL LIST AND STANDARD DETAILS.

SECTION 202 - DUCTILE IRON PIPE, FITTINGS, AND APPURTENANCES

202.01 GENERAL.

Unless otherwise noted ductile iron pipe shall conform to ANSI A-21.51, and AWWA C151.

All ductile iron pipes shall be of the class called for in the Proposal, plans, or the specifications. Pipes shall be furnished in lengths not shorter than 18 feet nor longer than 20 feet and shall conform to Table 200-1 and Table 200-2.

Table 200-1 - STANDARD DIMENSIONS OF MECHANICAL JOINT AND PUSH-ON JOINT DUCTILE IRON PIPE

Pipe Size (Inches)	Thickness (Class)	Thickness (Inches)	Outside Diameter (Inches)
3	52	0.28	3.96
4	52	0.29	4.80
6	52	0.31	6.90
8	52	0.33	9.05
10	52	0.35	11.10
12	52	0.37	13.20
16	52	0.40	17.40
18	52	0.41	19.50
20	52	0.42	21.60
24	52	0.44	25.80
30	52	0.47	32.00
36	52	0.53	38.30
42	52	0.59	44.50

Table 200-2 - STANDARD DIMENSIONS OF DUCTILE IRON PIPE FOR USE WITH THREADED FLANGES			
Pipe Size (Inches)	Thickness (Class)	Thickness (Inches)	Outside Diameter (Inches)
3	53	0.31	3.96
4	53	0.32	4.80
6	53	0.34	6.90
8	53	0.36	9.05
10	53	0.38	11.10
12	53	0.40	13.20
16	53	0.43	17.40
18	53	0.44	19.50
20	53	0.45	21.60
24	53	0.47	25.80
30	53	0.51	32.00
36	53	0.58	38.30
42	53	0.65	44.50

Whenever ductile iron pipe is to be furnished with a thickness other than those shown in Tables 200-1 and 200-2, the design thickness shall be submitted in writing to the Department for approval at least ten (10) calendar days prior to the date of opening of bids.

Ductile iron pipe shall be either mechanical joint, push-on joint, or flanged joint unless otherwise specified.

A. Fittings. Ductile iron and cast iron fittings and special castings shall comply with ANSI A-21.10 and AWWA C110 and have mechanical joints, push-on joints or flanged joints and shall be all bell (without spigot or plain ends) unless otherwise specified.

For Oahu Only:
The class of mechanical joint, ductile iron fittings shall be:

1. *Class 350 for 4-inch to 24-inch fittings*
2. *Class 250 for 30-inch to 42-inch fittings*

The class of flanged, ductile iron fittings shall be:

1. *Class 350 for 4-inch to 12-inch fittings*
2. *Class 250 for 16-inch to 42-inch fittings*

If fittings and special castings called for on the plans are not covered by ANSI A-21.10 and by AWWA C110, the Contractor shall submit shop drawings and manufacturer's specifications to the Manager for approval prior to casting. Six copies of the approved drawings and specifications shall be forwarded to the Manager.

For Hawaii and Maui Only: Fittings shall be either mechanical joints or flanged joints only.

B. Polyethylene Encasement. Unless otherwise specified, all ductile iron pipes, valves, and fittings shall be encased in 8 mil minimum thickness polyethylene material in accordance with ANSI A-21.5 and AWWA C105. *(For Hawaii Only: Ductile iron mains, valves, and fittings located at invert elevation of 5 feet or lower shall be polyethylene encased.)* Polyethylene material shall have permanent markings per AWWA C105.

For Oahu Only: All ductile iron pipes, valves and fittings shall be encased in 2 layers of polyethylene material. Copper service laterals shall be encased with polyethylene wrap (3 feet minimum) from the connection to ductile iron pipes as shown on the Standard Details.

C. Corrosion Protection. See Division 500 for required coating types and other corrosion control requirements as applicable to the project.

D. Interior Lining. All pipes, fittings, and special castings, except sleeves and plugs, shall be cement mortar lined in accordance with ANSI A-21.4 and AWWA C104.

Interior linings shall have tapered ends and shall be sealed with a bituminous seal coat.

E. Exterior Coating. All ductile iron pipes, fittings, and special castings shall be coated on the exterior surfaces with a bituminous coating approximately 1 mil thick. The finished coating shall be continuous, smooth, neither brittle when cold nor sticky when exposed to the sun and shall be strongly adherent to the pipe. Surfaces shall be clean and dry, free from all grease, oil, sand, and other foreign materials when painted.

F. Bolts And Nuts. All bolts and nuts shall be either silicon bronze (ASTM F467 and F468) or stainless steel (ASTM F593 and F594, type 316). All bolts and nuts shall be silicon bronze only if submerged in water. Bolts and nuts installed shall be compatible in strength and material characteristics. Bolts shall protrude beyond the nuts and protrusion shall be a minimum of 1/8-inch but shall not exceed 1/2-inch. All stainless steel bolt and nut threads shall be pre-coated with anti-seizing graphite compound before installation.

202.02 MECHANICAL JOINT.

A. General. Mechanical joints shall conform with all provisions of ANSI A-21.11 and AWWA C111, "Rubber-Gasket Joints for Ductile Iron Pressure Pipe and Fittings".

Mechanical joint pipes and fittings shall be furnished complete with gaskets, glands, bolts, and nuts.

Ductile iron MJ glands shall be straight-sided polygon in shape. Ductile iron thickness shall be the same as gray (cast) iron dimensions in AWWA C111. Glands shall be full-bodied from and between bolt holes. Scalloped or reduced metal gland section glands are not permitted.

Silicon bronze (ASTM F467 and F468) or stainless steel (ASTM F593 and F594, type 316) bolts and nuts shall be used for all mechanical joints. All bolts and nuts shall be silicon bronze only if submerged in water. All stainless steel bolt and nut threads shall be pre-coated with anti-seizing graphite compound before installation.

Gaskets shall be vulcanized natural or vulcanized synthetic rubber, free of porous areas, foreign materials, and visible defects. No reclaimed rubber shall be used.

Bolt holes shall straddle the vertical centerline.

B. Fittings. Mechanical joint fittings shall be manufactured in accordance with ANSI A-21.10 and AWWA C110. The mechanical joint fittings shall be Class 250 or 350 as called for in the proposal or designated on the plans equal to or exceeding the class of the ductile iron pipe to be installed.

For Oahu and Kauai only: Compact fittings are not permitted.

For Maui Only: Except for top vertical with anchor blocks, mechanical joint fittings may be manufactured in accordance with AWWA C153, compact fittings. Glands shall comply with AWWA C111.

For Hawaii only: Mechanical joint fittings may be manufactured in accordance with AWWA C153, compact fittings.

202.03 PUSH-ON JOINT.

A. General. Push-on joint shall conform with all applicable provisions of ANSI A-21.11 and AWWA C111, "Rubber-Gasket Joints for Ductile Iron Pressure Pipe and Fittings". The plain end of the pipe shall have a slight taper to ease its sliding-fit with the gasket when the joint is made.

Push-on joint pipe shall be furnished complete with gaskets and lubricant.

B. Fittings. Fittings for push-on joint pipe shall be mechanical joint or push-on joint fittings unless otherwise specified. The push-on joint fittings shall be manufactured in accordance with ANSI A-21.10 and AWWA C110.

For Hawaii and Maui Only: Joints for fittings shall be mechanical joint.

202.04 FLANGED JOINT.

A. General. Flanged pipes and fittings shall be furnished complete with gaskets, bolts, and nuts. Threaded flanged pipes shall conform to AWWA C115.

Flanges shall be faced and drilled in accordance with ANSI B-16.1, Class 125, rated for 150 to 200 psi or Class 250, rated for 250 psi. Bolt holes shall straddle the vertical center line.

Gaskets shall be "full face" 1/16-inch thick, duck-inserted rubber packing, Garlock No. 19, "half-face" 1/8-inch thick "FLANGE-TYTE" gasket, or approved equal.

The bolts used for all flanged joints shall protrude beyond the nuts a minimum of 1/8-inch but shall not exceed 1/2-inch. All stainless steel bolt and nut threads shall be pre-coated with anti-seizing graphite compound before installation. Should the bolts protrude more than 1/2-inch, the bolt ends shall be machine cut before installation. Bolts shall be with cut threads and American Standard heavy hexagon heads. Nuts shall be compatible with the bolts in strength and material characteristics. Nuts shall be hexagon. Bolts and nuts for flanges shall conform to one of the following:

1. Silicon bronze bolts and nuts shall conform to ASTM F467 and F468.

2. Stainless Steel bolts and nuts shall conform to ASTM F593 and F594, type 316.

B. Fittings. Flanged fittings shall be Class 250 or 350 as called for in the Proposal or designated on the plans. Fittings shall conform with ANSI A-21.10 and AWWA C110.

All flanged fittings and special castings shall have integral flanges and shall be sand cast.

202.05 SPECIAL FITTINGS. *(For Maui only)*

A. Pipeline Couplings. *Pipeline coupling shall be supplied in the "long body" style, 12-inches minimum length.*

SECTION 203 - CONCRETE CYLINDER PIPE AND FITTINGS

203.01 GENERAL.

Concrete cylinder pipe shall be either pretensioned concrete cylinder pipe (bar wrapped concrete pressure pipe) or cement mortar lined and coated cylinder pipe.

Concrete cylinder pipe shall be in sections having nominal lengths of 16 to 32 feet, except where shorter lengths are required for fittings, curves, closures, or special sections. The pipe shall consist of the following component parts:

1. A welded sheet-steel cylinder with bell and spigot steel joints.

2. A centrifugally cast concrete or mortar lining.

3. Reinforcement consisting of steel reinforcement.

4. Mortar or concrete enveloping the steel cylinder and reinforcement.

5. A self-centering joint with a preformed rubber gasket so designed that the joint will be water tight under all conditions of service.

Pipe shall be of the class designated on the plans or called for in the Proposal. *(For Oahu only: All straight pipes shall be class 250.)*

The diameter of the pipe and fitting called for in the Proposal or designated on the plans shall be the clear inside diameter.

Pipes, fittings, and specials shall be water cured for a period of not less than 7 days in accordance with Federal Specifications SS-P-1540 for cement mortar lined and coated pipe or AWWA C303 for pretensioned concrete cylinder pipe.

A. Steel Cylinder. Steel for cylinder shall be hot-rolled, low carbon open hearth or electric furnace steel sheets conforming to the requirements of ASTM A415 or steel plates conforming to ASTM A283, either Grade "B", "C", or "D" and ASTM A570 Grade "C". Steel cylinder shall be fabricated in accordance with AWWA C200 for fabricated electrically welded pipe and C-303 for pretensioned type pipe. Steel cylinder thickness shall be as specified in Section 203.02 - PRETENSIONED CONCRETE CYLINDER PIPE and Section 203.03 - CEMENT MORTAR LINED AND COATED CYLINDER PIPE of these standards.

B. Interior Lining. The cement mortar lining shall be applied within the cylinder by the centrifugal method to the thickness specified in Table 200-3 and Table 200-4 of these specifications.

Two or more external stiffener rings shall be in place around each cylinder during centrifugation of the lining. The end gauge rings and stiffener rings shall limit the deviation from the mean diameter of the cylinder, at any section, to a maximum of 1/2 percent. End gauge rings shall remain in place until the end of the primary cure. Stiffener rings shall also remain in place during primary cure unless equivalent support is provided by other means.

C. Exterior Coating. The coating thickness shall be as specified in Table 200-3 and Table 200-4 of these specifications.

D. Flanged Joints. All flanges for the joint shall be as specified under AWWA C207.

E. Water. Water used for concrete, mortar, and for curing shall be clean, salt-free, potable water.

F. Guarantee. All materials furnished and workmanship performed in accordance with these specifications shall be guaranteed for a period of one year.

G. Rejection. Pipes and fittings delivered at the job site showing cracks and checks in the lining or coating shall be rejected.

H. Corrosion Protection. See Division 500 for additional corrosion control requirements as applicable to the project.

203.02 PRETENSIONED CONCRETE CYLINDER PIPE. (Bar Wrapped Concrete Pressure Pipe)

A. General. Pretensioned concrete cylinder pipe shall be designed and manufactured as specified in AWWA C303, "Concrete Pressure Pipe, Bar Wrapped Steel Cylinder Type" with the following additions and modifications.

1. The manufacturer shall submit detailed design calculations and drawings prior to manufacture of any pipe.

   Values for nominal lining thickness and nominal coating thickness shall be as shown in Table 200-3.

   Each steel cylinder shall be subjected to hydrostatic test which will stress the steel to a unit stress of 0.75 times the specified minimum yield point of the steel used.

   Minimum cylinder gauge thickness shall be 14 gauge USG.

   Minimum bar center to center rod spacing shall be 1 inch and maximum spacing shall be 1.96 inch, but under no circumstance shall rod area be less than 1% of the diameter of the pipe nor 0.23 square inches per foot, whichever is greater.

Class 150 and Class 250 pipes shall be designed in accordance with Equation 7-1, AWWA Manual M9 - "Concrete Pressure Pipe". For Equation 7-1, P_w shall be the test pressure of the main.

Table 200-3 - PRETENSIONED CONCRETE CYLINDER PIPE LINING AND COATING THICKNESS

Nominal I.D. of Pipe (Inches)	16	20	24	30	36	42
Nominal Lining Thickness (Inches)	½	¾	¾	¾	¾	¾
Nominal Coating Thickness (Inches)	1	1	1	1	1	1

2. As the circumferential rod reinforcement is wound, a Portland cement slurry composed of one sack of cement to not more than five gallons of water shall be applied to the reinforcement and cylinder. A retarder may be used in the mix. A sulfate-resistant cement and/or high build epoxy coating may be required in certain areas. See Division 500 for corrosion control requirements as applicable to the project.

3. Sized bell and spigot joint rings shall be welded to the steel cylinder prior to hydrostatic testing. The bell shall have a minimum thickness equal to the thickness of the steel cylinder but not less than 10 gauge for 16-inch and smaller and 3/16 inch for 20-inch and larger.

   The spigot end shall be formed from hot-rolled steel section having Carnegie Shape M-3516. The ring shall be attached to the cylinder by electric arc welding. The root dimension of the joint band fillet weld shall be equal to the thickness of the cylinder or the bell or spigot rings, whichever is less. The spigot ring shall have a minimum thickness equal to the thickness of the steel cylinder.

4. Electrical continuity plates or straps are required. See Division 500 for corrosion control requirements as applicable to the project.

203.03 CEMENT MORTAR LINED AND COATED CYLINDER PIPE.

A. General. Cement mortar lined and coated cylinder pipe shall be manufactured in accordance with Federal Specification SS-P-1540 with the following modifications:

1. Minimum values for lining and coating thickness shall be as shown in Table 200-4.

   Each cylinder shall be subjected to a hydrostatic test which will stress the steel to a unit stress of 0.75 times the specified minimum yield point of the steel used.

   The manufacturer shall submit detailed design calculations and drawings prior to the manufacture of any pipe.

   Minimum cylinder gauge thickness shall be 12 gauge USG.

Table 200-4 - CEMENT MORTAR CYLINDER PIPES LINING AND COATING THICKNESS

Nominal I.D. of Pipe (Inches)	16	20	24	30	36	42
Nominal Lining Thickness (Inches)	½	¾	¾	¾	¾	¾
Nominal Coating Thickness (Inches)	1	1	1	1	1	1

2. The bell and spigot ends of the pipe shall be formed by welding to the steel cylinder.

   The bell and spigot ends formed by welding the joint rings to the steel cylinder shall meet the following requirements:

   a. The sized bell and spigot joint rings shall be welded to the steel cylinder prior to hydrostatic testing.

   b. The bell shall have a minimum thickness equal to the thickness of the steel cylinder but not less than 10 gauge for 16-inch and smaller pipes and 1/4-inch for 20-inch and larger pipe.

   c. The spigot end shall be formed from hot-rolled steel section having Carnegie Shape M-3516.

d. The bell and spigot joint rings shall be attached to the cylinder by electric arc welding. The root dimension of the joint band fillet weld shall be equal to the thickness of the cylinder or the bell or spigot rings, whichever is less.

e. Electrical continuity plates or straps are required. See Division 500 for corrosion control requirements as applicable to the project.

3. Exterior Coating. Prior to the application of the coating, a cement slurry composed of one sack of Portland cement to not more than five gallons of water shall be applied in such a manner as to coat the exposed surface of the steel assembly evenly and uniformly.

4. A sulfate-resistant cement and/or high build epoxy coating may be required in certain areas. See Division 500 for corrosion control requirements as applicable to the project.

203.04 CONCRETE CYLINDER FITTINGS.

A. General. Fittings shall be fabricated from welded steel sheet or plate, lined and encased with cement mortar. Steel sheet or plate for the fittings and specials shall be cut, shaped, and welded to the required shape and dimensions shown on the drawings. Butt welding shall be used.

B. Fittings. Fittings shall be suitably reinforced and designed equal in strength to the abutting pipe sections.

Fittings may be fabricated to be integral with a straight section of pipe with the understanding that any field adjustments required will be done at no cost to the Department.

At connections, all fittings requiring "strut-type" design for thrust blocks shall be reinforced externally with a ½-inch steel plate as shown on the Standard Details. Joint shall conform with the type of joint fabricated for the pipe.

C. Reinforcement. Crimped 2-inch by 4-inch, No. 13 gauge welded wire mesh shall be applied to the exterior steel surface which is to be cement mortar cased. Plain 2-inch by 4-inch, No. 13 gauge welded wire mesh shall be applied to the interior steel surface of fittings and specials 30-inch in diameter and larger which are to be cement mortar lined. Where the lining is placed centrifugally, no wire mesh reinforcement is required. The wires at 2-inch spacing shall extend circumferentially around the fitting. The ends of the reinforcement shall be lapped 4 inches and tied together.

Outlets built into the pipe for blowoffs, branches, air relief valves and access manhole shall be of suitable design. The cylinder shall be reinforced with collars or wrappers as required for the opening before the lining and coating are applied.

Wyes, tees, crosses, and reducers 16-inch in diameter and larger shall be reinforced with steel ribs or crotch plates welded continuously to the cylinder or by other methods to withstand the longitudinal crushing effect produced by the design pressure.

D. Factory Testing of Steel Cylinder. Fittings shall be subjected to a hydrostatic test equal to 150 percent of the designed working pressure. Any defect revealed by the test shall be repaired. Testing shall continue until all defects are eliminated.

203.05 CORROSION PROTECTION.

See Division 500 for corrosion control requirements as applicable to the project.

SECTION 204 - PLASTIC PIPE

204.01 POLYVINYL CHLORIDE (PVC) C-900 & C-905 PIPE.

A. General. PVC C-900 and C-905 pipe shall be cast-iron-pipe-equivalent O.D. type as called for in the Bid, Plans and Specifications.

Only elastomeric-gasket type joints shall be allowed. Pipe shall be furnished complete with integral bells or couplings of the same type and composition as the pipe, with gaskets conforming to ASTM F477, and with lubricant. All gaskets and lubricants shall be made from materials that are compatible with the plastic material and with each other when used together. The material shall not support the growth of bacteria nor adversely affect the potable quality of the water that is to be transported.

Conducting cable *(copper toning wire for Oahu only)* shall be installed over the PVC pipe for its entire length. See Division 500 for corrosion protection requirements as applicable to the project.

The installation of PVC pipes according to the plans and specifications may require additional fittings, special couplings, and items of work not specified due to the limited ability of PVC pipe to deflect at the joints. Bending of PVC pipes will not be allowed.

All PVC pipe deflections shall be accomplished only by the use of Special PVC deflection couplings. Deflection around curves shall be accomplished only by the use of PVC deflection couplings.

B. AWWA C900 PVC PIPE. PVC C900 pipe shall be in compliance with Table 200-5 and AWWA C900, "AWWA Standard For Polyvinyl Chloride (PVC) Pressure Pipe, 4-inch Through 12-inch For Water Distribution".

Table 200-5 - PVC C900 PIPE STANDARD DIMENSIONS				
Pipe Size (In.)	Class (psi)	DR	Thickness (In.)	Outside Diameter (In.)
4	150	18	0.267	4.800
4	200	14	0.343	4.800
6	150	18	0.383	6.900
6	200	14	0.493	6.900
8	150	18	0.503	9.050
8	200	14	0.646	9.050
12	150	18	0.733	13.200
12	200	14	0.943	13.200

C. AWWA C905 PVC Pipe. PVC C905 pipe shall be in compliance with Table 200-6 and AWWA C905, "AWWA Standard for Polyvinyl Chloride (PVC) Transmission Pipe, Nominal Diameters 14-inches Through 36-inches".

Table 200-6 - PVC C905 PIPE STANDARD DIMENSIONS				
Pipe Size (In.)	Class (psi)	DR	Thickness (In.)	Outside Diameter (In.)
16	150	18	0.967	17.400
18	150	18	1.083	19.500
20	150	18	1.200	21.600
24	150	18	1.433	25.800
30	150	18	1.778	32.000

D. Fittings.

1. Ductile Iron Fittings. Ductile iron fittings used with PVC C900 and C905 pipes shall conform to ANSI A-21.10. Fittings shall have mechanical or push-on joints. The class of fittings shall be at least equal to the class of the PVC pipe to be installed. Joints for the fittings shall meet all applicable requirements of ANSI A-21.11.

2. PVC Fittings. PVC fittings shall be used only with PVC C900, Class 150 pipes and shall conform to AWWA C907, "AWWA Standard For Polyvinyl Chloride (PVC) Pressure Fittings For Water - 4 In. Through 8 In." Only the types of fittings specified in AWWA C907 are approved for use. Ductile iron fittings shall be used for all types of fittings not specified in AWWA C-907. The reaction block requirements for PVC fittings shall be the same as for ductile iron fittings. Hub clamps and set screws shall not be used on PVC fittings. Prior to the installation of all PVC fittings, the Contractor shall submit a manufacturer's certification that all PVC fittings conform in all respects to AWWA C907. PVC fittings shall bear permanent identification markings conforming to AWWA C907.

SECTION 205 - VALVES AND APPURTENANCES

205.01 GENERAL.

Unless otherwise noted, each type of valve shall conform to the appropriate ASTM or AWWA standards specified. All valves shall be of the type and class as called for in the proposal, plans or specifications.

See Division 500 for required corrosion protection requirements as applicable to the project and as shown on the plans and specifications.

205.02 GATE VALVES.

A. General. All gate valves shall be approved by the Manager. Valves shall have non-rising stems, unless otherwise specified, with inside screw and shall open to the left or counter-clockwise. Valves shall have the manufacturer's name, size, catalog number, and working pressure molded or stamped thereon in places where the name and number may be easily seen when the valves are installed. External surfaces of valves shall be shop coated with fusion-bonded epoxy coating or with two coats of an asphalt coating conforming to Federal Specifications TT-C-494B. Valves shall be furnished complete with all accessories.

Mechanical joint, push-on joint, and flanged joint for gate valves shall be in accordance with all applicable requirements specified for joints.

For Maui Only: Mainline valves shall be mechanical joint or flange joint.

All valves shall be for buried service unless otherwise specified.

Stuffing box bolts and nuts, bonnet bolts and nuts, and gland or flange bolts and nuts shall be Silicon Bronze in accordance with ASTM F467 and F468 or may be ASTM F593 and F594, type 316 stainless steel bolts and nuts. All stainless steel bolt and nut threads shall be pre-coated with anti-seizing graphite compound before installation.

All valves shall be full body and not thin-walled or reduced walled-type.

For working pressures of 200 psi or less, all gate valves 4-inches to 12-inches *(16-inch for Maui)* shall be resilient seat type of gate valve. For working pressures greater than 200 psi or when the gate valve size is larger than 12-inches *(16-inch for Maui)*, the gate valve shall be the metal-seated type.

B. Valves Three (3)-inch and Smaller. Valves shall be of the wedge-disc type with non-rising stem, screw ends, and brass or bronze body. Metal composition of the body, centerpiece, and other cast parts shall be bronze, meeting the requirements of ASTM B62. All packing shall be Johns-Manville "Duro" packing style No. S-171 or approved equal, and shall have each ring cut to fit with staggered joints. Continuous (spiraled) packing shall not be used. Valves shall be provided with brass handwheels and stuffing box glands. Unless otherwise specified, valves shall be for 200-pound water service.

C. Metal-Seated Valves Four (4)-Inch and Larger. All metal-seated gate valves four (4)-inch and larger shall conform to AWWA C500 with cast iron body, bronze (not brass) mounted, double disc, and parallel seat and shall be furnished with 2-inch square operating nuts. Valves shall be equipped with double O-ring stem seals with both rings located above the collar. Valves shall have either push-on, mechanical joint or flanged joint ends as designated on the plans or called for in the Bid.

Sixteen-inch and larger valves shall be provided with cast steel cut tooth, bevel gears with integral or extended gear case, lubricated and supplied with watertight gland enclosure. Valves shall be equipped with by-passes as shown in Table 200-7: *(For Maui only: Gate valve shall be fusion bonded epoxy coated.)*

Table 200-7 - BY-PASS VALVES

Size of Valve (Inches)	Size of By-Pass Valve (Inches)
16-20 Inclusive	3
24-30 Inclusive	4
36-42 Inclusive	6

The by-passes shall be in the horizontal plane when the gate valves are installed in the line.

All valves except bevel geared gate valves shall operate "upright" (vertical in horizontal pipe). Bevel geared gate valves shall operate on "edge" (horizontal in horizontal pipe) and shall be equipped with solid bronze rollers, tracks, and scrapers.

Valves shall be either Class 150, Class 200, or Class 250 as designated on the plans or called for in the bid. Class 250 valves shall be designed for 250 pounds working pressure and tested to 400 pounds.

All bolts and nuts shall be either silicon bronze (ASTM F467 and F468) or stainless steel (ASTM F593 and F594, type 316). All bolts and nuts shall be silicon bronze only if submerged in water. Bolts and nuts installed shall be compatible in strength and material characteristics. Bolts shall protrude beyond the nuts and protrusion shall be a minimum of 1/8-inch but shall not exceed 1/2-inch. All stainless steel bolt and nut threads shall be pre-coated with anti-seizing graphite compound before installation. Dimensions of bolting material shall meet ANSI B18.2.1 specifications. Bolting of the valve body parts shall be by bolts and nuts. Tapped bolt holes into the valve body are unacceptable.

D. Resilient-Seated Gate Valves.

1. General. Resilient-seated gate valves shall be manufactured to meet all applicable requirements of AWWA C509, "Resilient-Seated Gate Valves For Water And Sewerage Systems". Valves shall be either 4, 6, 8, or 12-inch in size and rated for service at 200 psi working pressure. Valves shall have non-rising stems, opening by turning left and provided with 2-inch square nut with arrow cast in metal to indicate direction of opening. Each valve shall have manufacturer's name, pressure rating and year in which manufactured cast on the body.

All bolts and nuts shall be either silicon bronze (ASTM F467 and F468) or stainless steel (ASTM F593 and F594, type 316). All bolts and nuts shall be silicon bronze only if submerged in water. Bolts and nuts installed shall be compatible in strength and material characteristics. Bolts shall protrude beyond the nuts and protrusion shall be a minimum of 1/8-inch but shall not exceed 1/2-inch. All stainless steel bolt and nut threads shall be pre-coated with anti-seizing graphite compound before installation. Dimensions of bolting material shall meet ANSI B18.2.1 specifications. Bolting of the valve body parts shall be by bolts and nuts. Tapped bolt holes into the valve body are unacceptable.

Stuffing boxes shall be of an O-ring design with a minimum of three O-rings. No gasket material made of asbestos shall be used.

Interior and exterior coating shall be fusion epoxy meeting AWWA C550, "Standard For Protective Interior Coatings For Valves and Hydrants".

Stem shall be bronze meeting the requirements of Grade D or Grade E Bronze as specified in AWWA C509.

Low friction torque reduction thrust bearings shall be located both above and below the stem collar.

If guides for the gate are required, there shall be no metal-to-metal contact, only metal-to-rubber.

205.03 BUTTERFLY VALVES AND MANUAL OPERATORS.

A. General. The manufacturer of the rubber-seated butterfly valve and manual operator shall be a nationally advertised firm with at least ten years' experience in the design and manufacture of valves of this type.

B. Butterfly Valves. The butterfly valve shall conform in all respects with AWWA C504, Class 150B, unless otherwise approved. The valve shall be short body valve with a cast iron body. The valve disc shall be cast or ductile iron, unless otherwise specified. If the rubber seat is mounted on the valve body, the valve disc shall be made of Ni-Resist unless a stainless steel seat ring is furnished. Valves shall have either push-on joint, mechanical joint, or flanged joint ends as designated on the plans or called for in the Bid. External surfaces of valves shall be shop coated with fusion-bonded epoxy coating or with two coats of an asphalt coating conforming to Federal Specifications TT-C-494B. Interior surfaces of butterfly valves shall be fusion bonded epoxy-coated.

All bolts and nuts shall be either silicon bronze (ASTM F467 and F468) or stainless steel (ASTM F593 and F594, type 316). All bolts and nuts shall be silicon bronze only if submerged in water. Bolts and nuts installed shall be compatible in strength and material characteristics. Bolts shall protrude beyond the nuts and protrusion shall be a minimum of 1/8-inch but shall not exceed 1/2-inch. All stainless steel bolt and nut threads shall be pre-coated with anti-seizing graphite compound before installation. Dimensions of bolting material shall meet ANSI B18.2.1 specifications. Bolting of the valve body parts shall be by bolts and nuts. Tapped bolt holes into the valve body are unacceptable.

C. Manual Actuator. The manual actuator shall conform in all respects with AWWA C504 unless otherwise stated in these specifications. The manual operator shall be furnished with a two-inch square operating nut, and a valve position pointer.

D. Manufacturer's Identification. The manufacturer's name and catalog number shall be molded or stamped on the valve where it can be easily seen after the valve is installed.

E. Submittals for Approval. The following submittals shall be furnished to and must be approved by the Department for each project before the valve is installed.

1. Certification from the valve manufacturer that both the valve and the actuator conform to all requirements of AWWA C504.

2. Certified drawings of valve and operator as specified in AWWA C504.

3. Certified copies of reports of the torque rating of the manual operator as specified in AWWA C504.

4. Calculations showing required operator input torque to develop the operating torque specified for Class 150B, of AWWA C504.

205.04 TAPPING VALVES AND SLEEVES.

Tapping valves and sleeves shall fit the A.P. Smith and Mueller tapping machines. All tapping valves and sleeves shall be furnished complete with bolts, nuts, and other standard accessories.

Valve ends to accommodate tapping machines shall be mechanical or flange joint for taps up to 24-inches in diameter. For taps larger than 24-inch mains, the materials, tools and equipment shall be provided by the Contractor and shall be verified with pipe manufacturer prior to approval by the Manager. *(For Hawaii and Kauai Only: The nominal tap size shall be smaller than the nominal main size.) (For Oahu only: The nominal tap size shall be smaller than the nominal main size for concrete cylinder pipe only.)*

Ends of sleeves shall be mechanical joint to fit Class 52 cast iron pipe, Class 150 or 200 PVC C-900 pipe, or Class 150 PVC C-905 pipe. Sleeves shall have flanged end outlets for the valve connections. External surfaces of valves shall be shop coated with fusion-bonded epoxy coating or with two coats of an asphalt coating conforming to Federal Specifications TT-C-494B.

Tapping sleeves for use with concrete cylinder pipe shall be modified according to the drawing shown in the Standard Details, unless otherwise approved. Contractor shall submit shop drawings for approval prior to installation.

All bolts and nuts shall be either silicon bronze (ASTM F467 and F468) or stainless steel (ASTM F593 and F594, type 316). All bolts and nuts shall be silicon bronze only if submerged in water. Bolts and nuts installed shall be compatible in strength and material characteristics. Bolts shall protrude beyond the nuts and protrusion shall be a minimum of 1/8-inch but shall not exceed 1/2-inch. All stainless steel bolt and nut threads shall be pre-coated with anti-seizing graphite compound before installation. Dimensions of bolting material shall meet ANSI B18.2.1 specifications. Bolting of the valve body parts shall be by bolts and nuts. Tapped bolt holes into the valve body are unacceptable.

For Maui only: Use of stainless steel tapping sleeves is not permitted.

205.05 BALL VALVES AND APPURTENANCES.

Ball valves shall have a full port opening and have female threaded ends, unless otherwise noted, meeting dimensions stated in AWWA C800. Valves shall be rated for a minimum of 200 pound water service. Valves shall be between 3/4" to 2½" in size. The valve body shall be made of bronze conforming to ASTM B62. The ball shall be made of bronze, ASTM B62 and be Teflon- or chrome-plated. All seals, thrust washers, and packing rings shall be made of Teflon or Buna-N.

Handwheels shall be provided and made of bronze, ASTM B62. Handwheel shall be removable when valve is in service and under pressure. Lever handles may be substituted for handwheels. Lever handles shall be made of bronze, ASTM B62 and sturdily bolted to the ball valve with bronze ASTM B62 bolting material; or Type 316 stainless steel, ASTM A193, ASTM A194, ASTM F593, and/or ASTM F594, bolting material.

For ball valves between 3/4" to 1-1/4" in size, handwheels shall have a maximum radius of 1½" from the vertical center of the valve. Lever handles shall have a maximum width of 1" and a radial length between 2½" to 3" from the vertical center of the valve to the end of the handle.

For ball valves between 1½" to 2½" in size, handwheels shall have a maximum radius of 3" from the vertical center of the valve. Lever handles shall have a maximum width of 1" and a radial length between 3" to 4" from the vertical center of the valve to the end of the handle.

All ball valves shall have locking capability and shall be blowoff-proofed to the atmosphere.

205.06 AIR RELIEF VALVES/COMBINATION AIR VALVES AND APPURTENANCES.

Air Relief Valves/Combination Air Valves and Appurtenances (ARV) shall conform to AWWA C512, "Standard For Air-Release, Air/Vacuum, and Combination Air Valves For Water Services". ARV shall be configured for underground installation with a threaded body inlet and a threaded cover outlet. Air relief valve bodies and covers shall be of gray cast iron conforming to ASTM A126, Class B or ASTM A48, Class 35 or ductile iron conforming to ASTM A536, Grade 65-45-12. ARV inlet size and rated maximum working pressure shall be as called for on the plans.

Valve and valve seat shall be of bronze, conforming to ASTM B62, type 316 stainless steel, or Buna-n-rubber. However, no stainless steel to stainless steel or Buna-n-rubber to Buna-n-rubber shall be allowed.

Valve trim, including the levers, float arms, pins, and vent cocks shall be bronze conforming to ASTM B62 or type 316 stainless steel.

Floats shall be of the highest quality seamless copper or stainless steel and shall operate with adequate force to insure positive valve action.

External surfaces of ARVs shall be shop coated with fusion-bonded epoxy coating or with two coats of an asphalt coating conforming to Federal Specifications TT-C-494B.

Fittings and nipples for connections of air relief valves shall be cast bronze or "Standard" brass (Grade A) screwed joint with metal conforming to Section 211 - BRASS PRODUCTS.

Vertical check valve shall be designed to operate on upward flow only and shall be brass or bronze. Valves shall be for 200-pound working pressure unless otherwise specified.

Ball corps and ball stops shall be as specified under "Service Laterals and Appurtenances".

Orifice size for ARV shall be as shown in Table 200-8.

Table 200-8 - ARV

ARV Inlet Size	Maximum Working Pressure (PSI)	5% Air Content (Standard Cubic Feet Per Minute)	Corresponding Orifice Size
3/4-inch	150	25	1/8-inch
3/4-inch	250	25	7/64-inch
1-inch	150	32	5/32-inch
1-inch	250	32	1/8-inch
2-inch	150	88	1/4-inch
2-inch	250	88	7/32-inch

All air relief valve nuts and bolts shall be silicone bronze or stainless steel.

SECTION 206 - HYDRANTS AND APPURTENANCES

206.01 GENERAL.

Hydrants shall be manufactured in accordance with the requirements of AWWA C502 or C503 unless otherwise approved by the Manager.

All hydrants shall be subjected to a hydrostatic pressure test of 300 pounds per square inch, and the pressure test shall be guaranteed by the manufacturer. Two copies of the Certification of Test shall be furnished before delivery.

Lengths of hydrant buries are from the face of the flange to the centerline of the 6-inch intake pipe.

Unless noted otherwise, the bell end of the 6-inch intake pipe (hydrant bottom elbow) shall be mechanical joint or push on joint and shall conform to all applicable requirements of ANSI A-21.11 and AWWA C111.

All hydrant parts shall be distinctly marked with its name, part number, length, size, and maker's name. The markings shall be on cloth tags securely fastened to the parts with wire or shall be painted on the parts by such other means as will insure the positive identification of the parts upon delivery.

Each hydrant body shall be furnished with a set of break-off bolts, nuts, and full face gasket. Bolts shall be stainless steel 5/8" x 3" machine bolts with hexagon heads American Standard heavy. Bolts shall be break-off type drilled 11/32" x 1-3/8". Nuts shall be stainless steel American Standard heavy cold punched, hexagon nuts. Gaskets shall be 1/8-inch cloth inserted rubber. Hydrant flange shall have six (6) 3/4-inch bolt holes on 9.375-inch diameter.

The manufacturer shall make and test at least one test bar from each heat of metal used in accordance with ASTM Specifications pertaining thereto.

Hydrants shall receive minimum SSPC SP3 surface preparation and coated as follows:

Primer: Mobil 13-W-10 water epoxy enamel or approved equal.

Intermediate Coat: Mobil 98 Series water epoxy hi-build or approved equal 0.5 mil DFT.

Finish: Mobil 91 Series water epoxy enamel 2 mil DFT (Color: OSHA Yellow).

Prepare surface between coats to proper condition for painting. Coating shall not be applied until preceding coat is hard and dry.

Fire hydrants shall be provided with bonnets, stuffing boxes and other appurtenant features all made of silicon bronze conforming to ASTM B98 and as specified in the approved material list. Fire hydrants shall be provided with bolts and nuts made of silicon bronze (ASTM F467 and F468) or stainless steel (ASTM A738 and A836). The break-off bolts and nuts shall be heavy stainless steel drilled as previously described.

No plastic caps allowed for all fire hydrants.

206.02 WET-BARREL HYDRANTS *(Not Applicable for Hawaii).*

All hydrants shall comply with AWWA C503 "Wet-Barrel Fire Hydrants for Ordinary Water Works Service". All hydrants shall have one (1) 4½-inch and one (1) 2½-inch outlet with Type B valves.

Body design shall be as approved by the Manager.

Composition of valving shall be Balata Gum. Valve and valve carrier shall be attached to the operating stem utilizing an "O" ring seal to prevent leakage through the valve. Stem packing shall be of the "O" ring type incorporating two "O" rings in the stem sleeves.

For Oahu only: All bronze fire hydrants shall be installed with bronze caps.

206.03 DRY-BARREL HYDRANTS *(For Hawaii Only).*

All hydrants shall comply with AWWA C502 "Dry-Barrel Fire Hydrants". All hydrants shall have one (1) 4½-inch and two (2) 2½-inch outlets as approved by the Manager.

All hydrants shall be furnished with "O" ring seal packing.

All hydrants shall be furnished with a breakable coupling device.

The barrel and operating mechanism shall be so designed that in the event of an accident, damage or breaking of the hydrant above or near the grade level the main valve will remain closed and tight against leakage. A positive operating drain valve or valves shall be provided to drain the hydrant properly by opening as soon as the main valve is closed. The drain valve shall close when the main valve is opened. The seat of the drain valve shall be bronze, fastened securely in the hydrant.

Body design shall be as approved by the Manager.

206.04 HYDRANT MARKERS.

Hydrant markers shall be reflective, Type DB (Two-Way blue reflective), and shall conform to Section 712.40(c) Reflective Pavement Markers of the Hawaii Standard Specifications for Road, Bridge and Public Works Construction, of the State of Hawaii, Department of Transportation, Highways Division.

Adhesive for hydrant markers shall be standard set type epoxy. The Manager may require, in writing, the use of rapid set type adhesive at no additional cost to the Department. Adhesives shall conform to the requirements of Section 712.41 Adhesives for Pavement Markers of the Hawaii Standard Specifications for Road, Bridge and Public Works Construction, of the State of Hawaii, Department of Transportation, Highways Division. Contractor shall submit certification that adhesive conforms to the specifications.

SECTION 207 - CAST IRON MANHOLE COVERS, FRAMES, RUNGS, EYEBOLTS, METER BOX AND VALVE BOX COVERS AND FRAMES, AND STANDPIPE

207.01 GENERAL.

Cast iron for frames and covers shall conform to ASTM A48.

All castings shall be of tough, close-grained, gray iron, sound, smooth, clean, and free from blisters, blowholes, shrinkage, and cold shuts.

Allowance shall be made in the patterns so that the finished castings shall have the specified dimensions.

The seats of manhole and valve box frames and covers shall be machined, not ground, to secure FLAT AND TRUE SURFACES. Castings for Cover and Reading Lid seats shall be chipped and ground where necessary to secure FLAT AND TRUE SURFACES.

All castings shall be thoroughly cleaned and painted before leaving the shop with one coat of high-grade asphaltum.

207.02 MANHOLE COVERS AND FRAMES.

All manhole covers and frames shall be made in accordance with the dimensions and notes shown on the Standard Details. The minimum weight for manhole covers and frames shall conform to Table 200-9.

Table 200-9 - MINIMUM WEIGHT FOR MANHOLE/VALVE BOX COVERS AND FRAMES

Manhole/Valve Box Size	Cover Weight (Pounds)	Frame Weight (Pounds)
6-inch	10	40
12-inch	45	80
24-inch	140	195

207.03 MANHOLE RUNGS.

Rungs shall be fabricated in accordance with the dimensions and notes shown on the Standard Details.

A. Hot-Dip Galvanized or Stainless Steel Rungs shall be 3/4-inch in diameter, hot-dipped galvanized carbon steel or stainless steel, Type 302, 304, or 316, or an approved equal. Rungs shall be in place before pouring of concrete or grout.

B. Steel Reinforced Copolymer Polypropylene Plastic Rungs *(For Oahu and Kauai only) shall be as follows:*

1. Conforms to ASTM D478 and C497, except that the minimum horizontal pullout load shall be 1,500 pounds.

2. Steel reinforcing shall conform to ASTM A615 for deformed reinforcing steel bars.

3. The minimum total cross-sectional area of the exposed portion of the step, including the 1/2-inch deformed reinforcing steel bar, and excluding the non-slip tread surface shall be one square inch.

4. The entire polypropylene plastic material surrounding the reinforcing steel bar shall be cast monolithically. Minimum cover shall be 3/16-inch.

5. Rungs shall be capable of withstanding an impact load of 70 foot-pounds at 20 degrees Fahrenheit without cracking or fracturing.

The rungs shall be installed level, plumb and in accordance with manufacturer's approved procedure.

207.04 EYEBOLTS, NUTS, AND WASHERS FOR TYPE "A" MANHOLE.

Eyebolt shall be one-inch diameter, 6-inches long, galvanized and with one-inch eye. Washer shall be 1/4"x 6"x 6" steel plate. Nuts shall be galvanized American Standard heavy cold-punched hexagon nuts.

207.05 METER BOX COVERS AND FRAMES.

Covers and frames for Type "B", "X", and Type III, IV and V meter boxes shall be made in accordance with the dimensions and notes shown on the Standard Details.

207.06 VALVE BOX COVERS AND FRAMES AND STANDPIPES.

Valve box covers and frames shall be made in accordance with the dimensions and notes shown on the Standard Details. The minimum weight for valve box covers and frames shall conform to Table 200-9.

Valve box standpipes shall be either cast iron pipe, reinforced concrete pipe, PVC pipe, or approved equal. Standpipes shall be as shown on the Standard Details.

207.07 BRASS PLATES *(For Oahu and Hawaii Only)*.

Brass plate shall be of materials conforming to specification of Section 211 - BRASS PRODUCTS and shall be affixed to the underside of the valve box or manhole covers as shown on the Standard Details.

SECTION 208 - SERVICE LATERALS AND APPURTENANCES

208.01 COPPER TUBING.

Copper Service Lateral shall be soft temper Type "K" and shall conform to ASTM B88.

Solder-joint fittings shall be cast bronze or wrought copper and shall conform with ANSI B-16. Cast bronze shall conform with ASTM B62. Wrought copper fittings shall be made of copper conforming with ASTM B251 or 85-5-5-5 brass.

Compression fittings shall be of cast bronze or stainless steel and conform to applicable AWWA, ANSI, and/or ASTM Standards.

Fittings conforming with AWWA C800 shall be required for the various sizes and combination of service laterals and connections and shall be as shown on the Standard Details.

Nipples shall be of the same quality as copper pipe.

Solder shall be 1/8-inch diameter and shall not contain more than 0.2 percent lead.

Flux shall be 'LA-CO' Flux Regular Stay-Clean Flux, Oatey Paste Flux, #95 Tinning Flux, General Purpose Soldering Flux or approved equal. Flux shall conform with Federal specifications O-F-506C Type I.

Solder and flux shall be delivered in their original containers.

See Division 500 for additional corrosion control requirements as applicable to the project.

208.02 BRASS PIPE.

Brass Pipe shall be Standard or Extra Strong as called for in the proposal. Pipe shall be as specified in Section 211 - BRASS PRODUCTS. See Division 500 for additional corrosion control requirements as applicable to the project.

208.03 PLASTIC TUBING.

All plastic tubing shall be approved by the Manager and shall be polyethylene (PE), copper tubing size as specified on the plans and specification.

A. Polyethylene Tubing. PE tubing shall conform to all applicable requirements of the following standards, unless otherwise specified in these Standards:

1. AWWA C901 - Standard for Polyethylene (PE) Pressure Pipe, Tubing, and Fittings, ½-inch through 3-inch, for Water.

2. ASTM D1248 - Specification for Polyethylene Molding and Extrusion Materials.

3. ASTM D2737 - Specification for Polyethylene Plastic Tubing.

PE tubing shall be manufactured from ultra-high molecular weight polyethylene, meeting the requirements of ASTM Material Classification PE3408. PE tubing shall meet the requirements of Type III, Class C, Category 5-P34 as defined by ASTM D1248. PE tubing shall be made from all virgin material approved for potable water service by the National Sanitation Foundation (NSF) and shall conform to ASTM D2737. PE tubing shall not fail, balloon, burst, or weep as defined in ASTM D1598 when tested in accordance with the sustained pressure test method of ASTM D2737.

PE tubing shall be rated for use with water at 73.4°F at a hydrostatic design stress of 630 psi and a minimum pressure class of 200 psi.

PE tubing shall have a Dimension Ratio (DR) of 9. The average outside diameter, minimum wall thickness and respective tolerances for any cross-section shall be as specified Table 200-10 when measured in accordance with ASTM D2122.

Table 200-10 - POLYETHYLENE TUBING

Nom. Tubing Size (in.)	Outside Diameter (in.)	Minimum Wall (in)	Wall Tolerance (in)
3/4	0.875 ± .004	0.097	+0.010
1	1.125 ± .005	0.125	+0.012
1-1/4	1.375 ± .005	0.153	+0.015
1-½	1.625 ± .006	0.181	+0.018
2	2.125 ± .006	0.236	+0.024

All PE tubing shall be permanently imprinted with manufacturer's brand name or trade mark, pipe size, identification of National Sanitation Foundation approval, ASTM Specification No., maximum working pressure and production code.

PE tubing shall be packaged for protection against sunlight, dirt, and damage during shipment, handling and storage. Packages shall be fully labeled with brand name and manufacturer, NSF seal, size, and coil length.

B. Plastic Tubing Markings. Plastic tubing markings shall be permanently imprinted with the following markings:

1. Nominal size.

2. Material code designation (PE3408).

3. The word "Tubing" and dimension ratio (DR9 for PE).

4. AWWA pressure class (PC200).

5. AWWA designation number (AWWA C901 for PE).

6. Manufacturer's name or trademark and production record code.

7. Seal (mark) of the testing agency that certified the suitability of the tubing material for potable water products.

All tubing shall be packaged for protection against sunlight, dirt, and damage during shipment, handling, and storage. Cartons shall be labeled with manufacturer's name or trademark, AWWA designation number, nominal size, and total length.

Fittings to be used with plastic tubing shall be approved by the Manager. Fittings shall be compression type, brass (with stainless steel stiffeners) or PVC, or approved equal.

Solvent cement type jointing shall not be used.

208.04 BALL CORPS.

Ball Corps shall conform to the requirements of AWWA C800 and the following:

1. Components shall be constructed of heavy brass conforming to ASTM B62, 85-5-5-5.

2. Shall have a rated pressure of 300 psig.

3. Shall be full port, straight through design. Ball corp waterway shall be the same size as the corp, except for 2-1/2-inch laterals. For example: 1" ball corp shall have a 1" waterway. For 2-1/2-inch laterals, install 2” x 2-1/2” bushings or adapters as required.

4. Inlet threads shall be AWWA taper (Mueller) threads.

5. Outlet threads shall be male iron pipe threads. *(For Maui only: Female iron pipe threads are also acceptable.)*

6. Ball shall be Polytetrafluoroethylene (PTFE) coated, capable of full 360 degrees rotation with nitrile (Buna-N) seals that provide shut-off from either direction.

7. Shall have double O-Ring seals at top.

8. Head shall have a raised boss or groove indicating the position of the ball.

9. Shall have a blowout proof stem design.

10. Shall have suitable marking indicating the manufacturer.

208.05 BALL STOPS.

Ball Stops shall conform to the requirements of AWWA C800 and the following:

1. Components shall be constructed of heavy brass conforming to ASTM B62, 85-5-5-5.

2. Shall have a rated pressure of 300 psig.

3. Shall be full port, straight through design. Waterway shall be the same size as the stop. For example: 1" ball stop shall have a 1" waterway.

4. Shall have female IPT threads, unless otherwise noted. *(For Kauai only: Shall have female IPT threads by meter coupling nut.)*

5. Ball shall be PTFE coated, capable of full 360 degrees rotation with two nitrile (Buna-N) seals that provide shut-off from either direction. Seals shall be blow-off proof to the atmosphere.

6. Shall have double O-Ring seals at top.

7. Head shall have a raised boss or groove indicating the position of the ball.

8. Shall have a blowout proof stem design.

9. Shall have suitable marking indicating the manufacturer.

10. For Hawaii only: Shall have padlock lock wings.

208.06 COUPLINGS *(For Oahu only).*

1. Coupling nuts shall conform with Section 2.11 and 4.2.1.1 of AWWA Standard C700-90. All couplings nuts shall be provided with 1/8-inch leather washers. Coupling nuts shall be made of a copper alloy containing not less than 75 percent copper. Coupling nuts shall be drilled for wire seal. Coupling nuts shall be an equal-sided hexagon without taper along the longitudinal axis of the coupling. No projections shall extend past the plane of the hexagon sides. For 3/4-inch meter coupling nuts, the distance between opposite sides of the coupling nut shall be between 1-1/2 and 1-5/8 inches. For 1-inch meter coupling nuts, the distance between opposite sides of the coupling nut shall be between 1-7/8 and 2 inches.

2. Coupling tail pieces shall conform with Section 2.11 and 4.2.1.2 of AWWA Standard C700-90. Overall length of tail pieces for 3/4-inch meters shall be 2-1/2 inches and for 1-inch meters shall be 2-5/8 inches, unless otherwise specified. Tail pieces shall be straight and shall be made of a copper alloy containing not less than 75 percent copper.

208.07 SERVICE SADDLES.

Service saddles, straps, nuts, and washers shall be made of bronze or approved equal. *(For Oahu only: Service saddles allowed for taps to existing pipes only.)*

Unless otherwise specified, service saddles shall be furnished with single or double straps *(double strap only for Maui and Oahu)* and shall be used as called for on the plans or as directed by the Manager.

Service saddles on PVC pipes shall provide full support and contact around the complete circumference of the pipe with the clamping arrangement fully contoured to the outside of the PVC pipe. Metal composition for service saddles, including saddles, straps, nuts, and washers shall be of bronze, Type 304 stainless steel *(not applicable for Oahu),* or approved equal. *(For Oahu only: Stainless steel service saddles and bronze service saddles with stainless steel straps are not allowed.)*

All service saddles shall have outlets tapped with Mueller tapered threads of the sizes called for on the plans. Saddles shall be furnished with closed cell neoprene gaskets.

208.08 METER BOX.

Meter boxes shall be made in accordance with the dimensions and notes shown in the Standard Details.

For concrete boxes, the cement shall be Portland cement conforming to ASTM C150, Type I. Fine and coarse aggregates shall conform to ASTM C33 or C330. Mixing water shall be clean and free from injurious amounts of oils, acids, alkalis, organic materials, or other deleterious substances. An admixture which increases durability and reduces permeability, and when used properly is in no way detrimental to the concrete, may be used. The combined aggregates shall be of such composition of sizes so that the surface of the finished product shall be continuous and of a uniform texture.

The maximum density of the concrete in the finished product shall be 115 pounds per cubic foot and the maximum absorption shall be 15 pounds per cubic foot. The compressive strength of the concrete shall be at least 2500 psi to be determined in a manner and at intervals satisfactory to the Manager.

SECTION 209 - PREMOLDED FILLER, CRUSHED ROCK, PIPE CUSHION, BACKFILL MATERIAL AND BRICKS

209.01 PREMOLDED FILLER.

Premolded filler to be used between pipes and manhole walls shall be a closed cell neoprene material such as Rubatex R-431-N or an approved equal.

209.02 PIPE CUSHION.

A. For Kauai, Maui and Oahu: *The various materials used for pipe cushion are natural sand, manufactured sand, coral, and crusher screenings as specified on Table 200-11. Cinders are not allowed.*

1. *Natural sand shall be free from hard lumps, debris, salt, and other foreign matter.*
2. *Manufactured sand shall be approximately equal to that specified under concrete Work.*
3. *Coral shall be dredged coral, free from salt, silt, clay, and other deleterious substances.*
4. *Crusher screenings "S4C" shall have a minimum amount of fines and shall conform to Table 200-11, or shall be subjected to tests conducted by the Manager for approval.*

Table 200-11 - S4C for PIPE CUSHION

Sieve Size	Total Percent Passing By Weight
½"	100
3/8"	90 – 100
No. 16	25 – 45
No. 100	5 – 15
No. 200	≤2.5
0.006 mm	≤1.5

The pipe cushion material shall have a resistivity of 5,000 ohm-cm or greater when saturated with distilled water and measured using the soil box method explained in ASTM G57. Pipe cushion material shall have a pH greater than 6.0. Pipe cushion material shall contain no hazardous substances above its corresponding regulatory action level. Hazardous substances include, but not limited to, lead, asbestos, mercury, chromium, cadmium, zinc, strontium and polychlorinated biphenyls (PCB). The Contractor shall submit a soil certification that high resistant cushion material has a resistivity greater than 5000 ohm-cm.

No crusher screening "S4C" shall be used in areas where the invert of the pipe is at or lower than the 4-foot elevation, USGS Datum, or in areas where the ground is wet.

***B. For Hawaii only**: Pipe cushion for ductile iron pipes 4-inches and larger shall be 1½" base course material. Pipe cushion for copper services shall be fine aggregate, conforming to Table 200-12 and as specified in Section 703.01 (Fine Aggregate for Concrete) of the Hawaii Standard Specifications for Road, Bridge, and Public Works Construction. No soil or native material shall be allowed.*

Table 200-12 - COPPER PIPE CUSHION

Sieve Size	Total Percent Passing By Weight
3/8"	100
No. 4	95 – 100
No. 8	80 – 100
No. 16	50 – 85
No. 30	25 – 60
No. 50	10 – 30
No. 100	2 – 12

209.03 CRUSHED ROCK.

Crushed rock shall consist of broken stone which shall be obtained from clean, hard, blue lava rock, and shall be free from disintegrated stone, organics or other deleterious substances.

Size of rocks shall range from 2½-inches to ¾-inch.

209.04 BACKFILL MATERIAL.

Material used for backfilling shall contain no stone, rock, concrete, or other material larger than 6 inches in its greatest dimension and shall contain no organic matter or debris of any kind. No cinders, "adobe" or similar material shall be used. Material shall contain no hazardous substances including but not limited to lead, asbestos, mercury, chromium, cadmium, zinc, strontium and polychlorinated biphenyls (PCB), above the regulatory action levels.

For mains and laterals to be installed in State DOT rights-of-way or highways, the trench backfill material shall meet applicable requirements of the "STANDARD SPECIFICATIONS FOR ROAD AND BRIDGE CONSTRUCTION", of the Hawaii Highways Division, DOT.

209.05 BRICKS.

Bricks for manhole, meter boxes and other water system applications shall be concrete bricks conforming with ASTM C55, Grade A.

SECTION 210 - VALVE MARKERS, PIPE HANGERS, LATERAL BRACINGS AND INSERTS

210.01 VALVE MARKERS.

Valve markers shall be as shown on the Standard Details. Concrete for the footings shall be as specified under Concrete Work.

210.02 PIPE HANGERS, LATERAL BRACINGS, AND INSERTS.

Pipe hangers and lateral bracings shall be of carbon steel, galvanized and shall be fabricated to the dimensions shown on the plans. Pipe hangers shall be furnished complete with hanger rods, inserts, lateral bracings, bolts and nuts. Pipe hangers shall be capable of vertical adjustments.

Pipe hanger inserts shall be bronze conforming with ASTM B22, Class "D" Grade, or gray iron castings conforming with ASTM A48, Class 30. Inserts shall be made in accordance with the dimensions and notes shown on the plans.

SECTION 211 - BRASS PRODUCTS

211.01 GENERAL.

All brass fittings shall conform to NSF Standard 61, Section 9 and Section 1417 of the Safe Drinking Water Act. Brass products shall meet applicable standards of AWWA C800 - "Standard For Underground Service Lines, Valves And Fittings". Written certification will be submitted to the Department certifying that all brass fittings and couplings for water meters, service valves, and fittings are manufactured from a brass alloy with a metal content consisting of 85% copper and 5% each of tin, lead, and zinc (85-5-5-5 spec.).

SECTION 212 - MISCELLANEOUS

212.01 ASPHALT SEAL FOR RESERVOIR INTERIOR PERIMETER.

Asphalt for interior perimeter of reservoirs shall meet the requirements of ASTM D449 for Type II asphalt and shall be poured at a temperature of not more than 300°F and at a slow rate to avoid air entrapment. All concrete surfaces to receive the asphalt shall be clean, dry and primed with a coat of quick-drying asphalt primer approved by the manufacturer of the asphalt. The Contractor shall submit written certification to the Manager that the asphalt seal used conforms to ASTM D449 Type II.

212.02 ASPHALTUM.

An asphaltum coating that will effectively waterproof immersed structures is required for the exterior of manholes as specified in the standard details. Surfaces shall be clean and dry, free from grease, oil, sand, and other foreign matter prior to placement of coating. Waterproofing materials shall conform with the following:

a. Primer shall conform to AASHTO M 116.

b. Fabric for waterproofing shall conform to AASHTO D 1668.

c. Asphalt for waterproofing shall conform to AASHTO M 115.

Materials shall be submitted for Manager's approval prior to installation.

212.03 BITUMASTIC COATING.

Bitumastic coating shall be a thick, heavy-duty cold applied, water emulsion-type protective coating. This material shall meet the following criteria:

a. Has high solids content.

b. Provides resistance to water and moisture vapor transmission.

c. Provides coatings that are resistant to deterioration from below ground acids and alkalies that are encountered in normal soil.

Materials shall be submitted for Manager's approval prior to application.

212.04 CRYSTALLIZATION PRODUCTS.

Crystallization products shall prevent the penetration of water and other liquids from any direction by causing a catalytic reaction that produces a non-soluble crystalline formation within the pores and capillary tracts of concrete and cement-based materials. This material shall:

a. Resist extreme hydrostatic pressure.

b. Seal hairline cracks up to 0.4 mm.

c. Become an integral part of the substrate.

d. Repair faulty construction joints and honeycombs.

Materials shall be submitted for Manager's approval prior to application.

212.05 GEOTEXTILE FABRICS.

A non-woven geotextile fabric is required to be used as a permeable separator for the base course or for other uses as indicated on the plans. The fabric shall be made of a non-woven geotextile material composed of polypropylene fibers conforming with ASTM D 4632, D 4533, D 3786, D 4833, D 4751, D 4491 and D 4355 and shall meet the following minimum strengths and criteria:

a. Grab Tensile Strength of 180 lbs.

b. Grab Tensile Elongation of 50%.

c. Trapezoid Tear Strength of 75 lbs.

d. Mullen Burst Strength of 330 psi.

e. Puncture Strength of 105 lbs.

f. Apparent Opening Size (AOS) of 70 sieve.

g. Permittivity of 1.4 sec^{-1}.

h. Flow rate of 100 $gal/min/ft^2$.

i. Retained UV Resistance (at 500 hours) of 70% strength.

Geotextile fabrics shall also meet the applicable requirements of the "STANDARD SPECIFICATIONS FOR ROAD AND BRIDGE CONSTRUCTION", of the Hawaii Highways Division, DOT. Materials shall be submitted for Manager's approval prior to installation.

212.06 PETROLEUM ASPHALTIC COATINGS (FACTORY APPLIED).

Exterior surfaces of pipes, valves (unless provided with a factory applied fusion-bonded epoxy coating), fittings and special castings shall be covered with two coats of petroleum asphaltic coating. This material will:

a. dry to a hard, tough, durable film,

b. effectively resist abrasion and peeling due to handling, transportation, and installation of the pipe, and

c. not crack nor chalk due to loss or evaporation of its ingredients.

Surfaces shall be clean and dry, free from grease, oil, sand, and other foreign matter prior to placement of coating.

212.07 WALL SLIDING JOINT MATERIAL.

Material for wall sliding joints shall be 1/16-inch thick of non-asbestos fibers bonded together with a cementing medium rendering it tough and pliable without plies or laminations. Material shall conform to ASTM F104 and shall meet the minimum operating conditions:

a. Pressure rating of 1,450 psi

b. 30% Creep Relaxation

c. Sealability of 0.25 ml/hr

d. Tensile Strength of 2,200 psi

e. Deformation of the pad under a load of 10,000 pounds per square inch shall not be more than 0.01 inch.

212.08 WARNING TAPE.

Warning tapes shall be four mil thick, non-metallic, acid and alkali resistant polyethylene and 6-inches wide with minimum strength of 1750 psi lengthwise and
1500 psi crosswise.

Tape color shall be “safety precaution blue” and shall bear a continuous printed inscription “CAUTION WATER LINE BURIED BELOW”. Inscription shall be 2-inches high, black text.

212.09 WATERSTOPS.

Waterstop shall be rubber or neoprene. When tested in accordance with the applicable provisions of ASTM D395, "Standard Method of Test for Compression Set of Vulcanized Rubber", ASTM D412 "Standard Method of Tension Testing of Vulcanized Rubber", ASTM D573, "Standard Method of Test for Accelerated Aging of Vulcanized Rubber by the Oven Method", and ASTM D2240, "Standard Method of Test of Indentation Hardness of Rubber and Plastics by Means of a Durometer", it shall conform to the following physical requirements:

a. Tensile strength shall be a minimum of 3000 psi.

b. The Shore A durometer hardness shall be 60 to 70.

c. The tensile strength of the test specimen after accelerated aging test of 7 days at 158°F shall be not less than 80 percent of the original test strength. The tensile strength of the test specimen after aging test of 48 hours in oxygen at 70°C and 300 psi shall be not less than 80 percent.

d. The compression set after 22 hours at 158°F shall be not more than 30 percent.

e. The specific gravity shall be 1.17 plus or minus 0.03.

f. The elongation shall be a minimum of 450 percent.

g. The water absorption shall be a maximum of 5 percent by weight after immersion in water for two days at 158°F. Test shall be made on specimen of the waterstop not more than 60 days prior to delivery.

h. Two certified copies of the test results shall be furnished to the Manager for approval.

Waterstops shall also meet the applicable requirements of the “STANDARD SPECIFICATIONS FOR ROAD AND BRIDGE CONSTRUCTION”, of the Hawaii Highways Division, DOT.

DIVISION 300 - CONSTRUCTION

TABLE OF CONTENTS
DIVISION 300 - CONSTRUCTION

SECTION PAGE

301 INTRODUCTION

301.01 General 301-1
301.02 Authority of Manager 301-1
301.03 Measurement and Payment 301-1
301.04 Quality of Materials for Construction 301-2
301.05 Sanitation 301-2
301.06 Provision for Emergencies 301-2
301.07 Accidents 301-2
301.08 Disturbing Monuments 301-3
301.09 Trees, Plantings, Shrubs and Grass 301-3
301.10 Responsibility Regarding Existing Utilities and Structures . . . 301-3
301.11 Notice to Public of Closing or Obstructing Public Thoroughfare 301-5
301.12 Cleaning Up 301-5
301.13 Patented Articles 301-6
301.14 Explosives 301-6
301.15 Use and/or Damage to Private Property (Property Owned Other Than by the Contractor) 301-6
301.16 Inspection 301-6
301.17 Additional Requirements for Private Development Projects 301-7

302 WATER MAINS AND APPURTENANCES

302.01 General 302-1
302.02 Trench Excavation 302-3
A. General 302-3
B. Payment 302-5
302.03 Trench Backfill 302-6
A. General 302-6
B. Preparation of Trench Bottom 302-7
C. Prior to Testing 302-7
D. After Testing 302-7
E. Completion of Backfill 302-8
F. Backfill at Valve Boxes 302-8
G. Payment 302-9

SECTION PAGE

302.04 Sheathing 302-9
A. General 302-9
B. Payment 302-9
302.05 Dewatering 302-9
A. General 302-9
B. Payment 302-10
302.06 “Adobe” or Clay 302-10
A. General 302-10
B. Payment 302-10
302.07 Mud Removal and Crushed Rock Trench Stabilization 302-10
A. General 302-10
B. Payment 302-10
302.08 Blasting 302-11
A. General 302-11
B. Payment 302-11
302.09 Excavation for Manholes 302-11
A. General 302-11
B. Payment 302-11
302.10 Excavation for Thrust Blocks, Beams and Test Blocks 302-11
A. General 302-11
B. Payment 302-12
302.11 Surplus Excavation 302-12
A. General 302-12
B. Payment 302-12
302.12 Ductile Iron Pipe 302-12
A. General 302-12
B. Mechanical Joint 302-13
C. Push-on Joint 302-14
D. Flanged Ends 302-15
E. Payment 302-15
302.13 Concrete Cylinder Pipe 302-15
A. General 302-15
B. Cement Mortar Mix 302-18
C. Field Cutting and Welding - Station Adjustment and Closures 302-18
D. Payment 302-18
302.14 Plastic Pipe 302-19
A. General 302-19
B. Payment 302-19

SECTION PAGE

302.15 Fittings and Specials (Ductile Iron, Concrete Cylinder, Plastic PVC Pipe) 302-20
A. General 302-20
B. Payment 302-20
302.16 Gate Valves and Butterfly Valves 302-21
A. General 302-21
B. Payment 302-22
302.17 Air Relief Valves/Combination Air Valves (ARV) and Appurtenances 302-23
A. General 302-23
B. Payment 302-23
302.18 Service Laterals, Connections and Pipes 302-24
A. General 302-24
B. Copper Service Laterals and Pipes 302-24
C. Plastic Service Laterals and Pipes 302-25
D. Payment 302-26
302.19 Meter Boxes 302-27
A. General 302-27
B. Payment 302-28
302.20 Fire Hydrants 302-28
A. General 302-28
B. Payment 302-29
302.21 Fire Hydrant Markers 302-30
A. General 302-30
B. Payment 302-30
302.22 Concrete Blocks, Jackets, Beams, Curb Guards, Slab for Fire Hydrants and Meter Boxes, Manhole and Valve Box Collar 302-30
A. General 302-30
B. Payment 302-31
302.23 Manholes 302-32
A. General 302-32
B. Walls 302-32
C. Top and Bottom Slabs 302-32
D. Reconstructing Existing Manholes 302-32
E. Payment 302-33
1. Manhole Walls 302-33
2. Manhole Slabs 302-33
3. Waterproofing 302-33
4. Adjusting Manholes 302-33
302.24 Valve Boxes 302-34
A. General 302-34
B. Payment 302-34

SECTION PAGE

302.25 Existing Water System 302-35
302.26 Water Supply 302-35
302.27 Pipe Cleaning 302-36
302.28 Pipe Pressure Tests 302-37
A. General 302-37
B. Payment 302-38
302.29 Chlorination of Water Pipelines 302-38
A. General 302-38
B. Disinfection Procedure (For Hawaii and Kauai Only) . . . 302-38
C. Disinfection and Sampling Procedure (For Oahu Only) . . 302-39
D. Disinfection Procedure (For Maui Only) 302-41
E. Disposal of Chlorinated Water 302-41
F. Repetition of Procedure 302-41
G. Procedural Guideline 302-41
H. Payment 302-41
302.30 Connections, Relocations and Lowering of Water Mains and Laterals 302-41
A. General 302-41
B. Payment 302-43
302.31 Removing or Demolishing, Reinstalling or Returning Existing Pipes and Appurtenances 302-43
A. General 302-43
B. Payment 302-44
302.32 Pipe Hangers, Lateral Bracings and Inserts 302-45
A. General 302-45
B. Payment 302-45
302.33 Pipe Sleeves Through Retaining Walls 302-45
A. General 302-45
B. Payment 302-45
302.34 Cleanouts and Risers 302-45
A. General 302-45
B. Payment 302-45
302.35 Valve Markers 302-46
A. General 302-46
B. Payment 302-46
302.36 Slow Curing Asphalt (SC-4) Pavement (Cold Mix) 302-46
A. General 302-46
B. Payment 302-47

SECTION PAGE

302.37 Restoring Pavements, Driveways, Sidewalks, Curbs, Gutters, Fences, Walls and Miscellaneous 302-47
A. General 302-47
B. Subbase and Base Course 302-48
C. Payment 302-48
302.38 Corrosion Protection 302-49
A. General 302-49
B. Payment 302-49
302.39 Confined Spaces 302-49

303 STRUCTURES

303.01 General 303-1
303.02 Sitework 303-1
A. Description 303-1
B. Clearing and Grubbing 303-1
C. Structure and Site Excavation 303-2
1. Reservoir 303-2
2. Other Structures 303-2
3. Blasting 303-2
4. Drainage 303-3
D. Fill, Backfill, Finishing and Grading 303-3
1. Structural Fill 303-3
2. Cushion Fill 303-3
3. Yard Subgrade Fill 303-3
4. Yard Finishing Material 303-3
5. Gravel Fill Ground Cover 303-4
6. Compaction 303-4
E. Grading Control 303-4
F. Surplus Excavated Material 303-4
G. Clean Up 303-4
H. Additional Requirements 303-5
I. Payment 303-5
303.03 Concrete Work 303-7
A. Description 303-7
B. Materials 303-7
1. Cement 303-7
2. Mixing Water 303-7
3. Concrete Aggregates 303-7
4. Admixture 303-8
C. Proportioning Concrete Mix 303-9
D. Prior Test Records 303-11

SECTION PAGE

E. Workability of Concrete 303-11
F. Changes in Proportions of Materials by Manager 303-11
G. Measurements of Materials 303-12
H. Truck Mixing (Mixed-in-Transit Concrete) 303-12
I. Time of Hauling Ready-Mixed Concrete 303-12
J. Job Site Mixing 303-12
K. Retempering 303-13
L. Field Tests of Concrete 303-13
1. Compressive Strength 303-13
2. Slump Test 303-13
M. Failure to Meet Compressive Strength Requirements . . . 303-13
N. Damaged or Defective Concrete 303-14
O. Formwork 303-14
1. General 303-14
2. Form Ties 303-15
3. Form Removal 303-15
P. Conveying, Placing and Handling 303-16
Q. Construction and Expansion Joints 303-18
1. Construction Joint Surface 303-18
2. Expansion Joint Filler Strip 303-18
3. Roof Sliding Joint 303-18
4. Waterstop 303-18
R. Protecting and Curing 303-18
S. Surface Finishes 303-19
1. Architectural Concrete 303-19
2. Integral Floor 303-20
3. Non-Slip Topping Surface for All Steps and Stair Treads 303-20
4. Retardant Concrete Coating 303-20
T. Payment 303-21
303.04 Reinforcing Steel 303-21
A. Description 303-21
B. Materials 303-21
C. Fabrication 303-21
D. Placing 303-21
E. Splicing 303-22
F. Protection of Material 303-22
G. Payment 303-22
303.05 Welded Wire Fabric 303-22
A. Description 303-22
B. Material and Placing 303-22
C. Payment 303-22

SECTION PAGE

303.06 Reinforced Concrete Reservoir 303-22
A. Description 303-22
B. Site Work 303-22
C. Concrete Work 303-23
1. Construction and Expansion Joints 303-23
2. Horizontal Construction Joint 303-23
3. Wall Sliding Joint 303-23
4. Interior Perimeter Seal 303-23
5. Roof Sliding Joint 303-23
6. Surface Finish 303-24
D. Cement Topping Coat 303-24
1. Description 303-24
2. Material 303-24
3. Installation 303-24
4. Protection and Curing 303-24
E. Built-Up Roofing 303-25
F. Leakage Test 303-25
G. Payment 303-25
303.07 Prestressed Concrete Reservoir 303-25
A. General 303-25
B. Post-Tensioning System 303-26
1. Button Head System 303-26
2. Strand Tendon 303-26
3. Rod Tendon 303-27
C. Grouted Tendons 303-29
D. Steel Work 303-29
E. Prestressing 303-31
F. Stress Retention 303-31
G. Grouting 303-32
H. Storage and Protection of Materials 303-32
I. Mill Certificates 303-32
J. Cutting of Strands or Rods 303-32
K. Layout Drawings 303-32
L. Payment 303-32
303.08 Facility Piping 303-33
A. Description 303-33
B. Material and Construction 303-33
C. Payment 303-33
303.09 Sampling Tube and Chlorine Injection Line 303-33
A. Description 303-33
B. Material and Construction 303-33
C. Payment 303-34

SECTION PAGE

303.10 Reservoir Leakage Test and Disinfection 303-34
A. General 303-34
B. Reservoir Leakage Test and Disinfection Procedure 303-34
C. Payment 303-36
303.11 Structure Clean-Up 303-36
A. Description 303-36
B. Payment 303-37
303.12 Protection of Reservoir 303-37
A. General 303-37
B. Payment 303-37
303.13 Unit Masonry 303-37
A. Description 303-37
B. Materials 303-37
1. Hollow Concrete Masonry Units 303-37
2. Cement 303-37
3. Aggregates 303-37
4. Water 303-38
5. Horizontal Joint Reinforcement 303-38
6. Mortar Admixture 303-38
7. Hydrated Lime 303-38
8. Masonry Cement 303-38
C. Certificate 303-38
D. Sample Blocks 303-38
E. Mortar and Grout 303-38
1. Mortar 303-38
2. Grout 303-39
F. Reinforcing 303-39
G. Anchors 303-39
H. Storage and Handling 303-39
I. Workmanship 303-40
J. Knock-outs and Bond-Beams 303-41
K. Tolerances 303-41
L. Cleaning 303-41
M. Payment 303-42
303.14 Stone Masonry 303-42
A. Description 303-42
B. Materials 303-42
1. Stone 303-42
2. Mortar 303-42
C. Installation 303-43
D. Payment 303-44

SECTION PAGE

303.15 Concrete Roofing Tile 303-44
A. Description 303-44
B. Material 303-44
C. Color Selection 303-44
D. Installation 303-45
E. Warranty 303-45
F. Payment 303-45
303.16 Built-Up Roofing 303-45
A. Description 303-45
B. Work Specified in Other Sections 303-45
C. Guarantee 303-45
D. Products 303-45
1. Roofing System 303-45
2. Summary of Materials Per 100 Sq. Ft. 303-46
3. Asphalt Primer 303-46
4. Asphalt 303-46
5. Flashing 303-46
6. Traffic Pads 303-46
7. Roofing Vents 303-46
8. Cant Strips 303-46
E. Inspection of Surfaces 303-46
F. Manufacturer Representative 303-46
G. Application 303-47
H. Payment 303-47
303.17 Metal Roofing and Siding 303-47
A. General 303-47
B. Coordination 303-47
C. Submittals 303-47
D. Guarantee 303-47
E. Materials 303-48
F. Installation and Workmanship 303-49
G. Dissimilar Materials 303-50
H. Finish Coating for Metal Roofing and Siding 303-50
I. Clean Up 303-50
J. Payment 303-50
303.18 Quarry Tile Work 303-51
A. Description 303-51
B. Materials 303-51
C. Application 303-51
D. Finishing 303-51
E. Removal of Condemned Tiles 303-52
F. Expansion Joint Sealant 303-52

SECTION PAGE

G. Cleaning 303-52
H. Protection 303-52
I. Payment 303-52
303.19 Carpentry and Millwork 303-52
A. Description 303-52
B. Materials 303-52
C. Wood Preservative and Termite Treatment 303-53
D. Additional Requirements 303-54
E. Payment 303-55
303.20 Drywall Construction 303-55
A. Description 303-55
B. Materials 303-55
C. Manufacturer 303-55
D. Samples 303-56
E. Installation 303-56
F. Payment 303-56
303.21 Caulking 303-57
A. Description 303-57
B. Materials 303-57
1. Polysulfide Caulking 303-57
2. Color 303-57
3. Primer 303-57
4. Resilient Joint Backing 303-57
C. Application 303-57
1. Joint Preparation 303-57
2. Caulking 303-58
D. Cleaning 303-58
E. Payment 303-58
303.22 Miscellaneous Iron and Metal Work 303-58
A. Description 303-58
B. Verifying Conditions 303-59
C. Shop Drawings 303-59
D. Steel 303-59
1. Materials 303-59
2. Workmanship 303-59
3. Metal Frames and Covers 303-59

SECTION PAGE

E. Aluminum 303-60
1. Materials 303-60
2. Fabrication, Installation and Workmanship 303-60
3. Dissimilar Materials 303-60
4. Finish 303-60
5. Expansion and Contraction 303-60
6. Temporary Protection 303-61
F. Copper 303-61
1. Materials 303-61
2. Fabrication, Installation and Workmanship 303-61
G. Interior Access Ladder 303-62
H. Exterior Access Ladder 303-62
I. Reservoir Ventilator Louvers 303-62
J. Payment 303-63
303.23 Doors and Frames 303-63
A. Description 303-63
B. Shop Drawings 303-63
C. Coordination 303-63
D. Hollow Metal Doors and Frames 303-63
1. General 303-63
2. Materials and Minimum Requirements: Flush Panel 303-64
3. Materials and Minimum Requirements: Frames 303-64
4. Finish 303-65
5. Installing Frames 303-65
6. Installing Doors and Hardware 303-65
E. Solid Core Flush Panel Doors 303-66
1. Material 303-66
2. Installation 303-66
F. Fiberglass Reinforced Plastic Doors 303-66
and Frames (For Hawaii Only)
1. Fiberglass Reinforced Plastic Doors 303-66
2. Fiberglass Reinforced Plastic Frames 303-67
3. Hardware 303-67
4. Installation 303-67
5. Guarantee 303-68
6. Manufacturer's Data 303-68
G. Payment 303-68
303.24 Finish Hardware 303-68
A. Description 303-68
B. General Requirements 303-68
C. Payment 303-69

SECTION PAGE

303.25 Acoustical Tile 303-69
A. Description 303-69
B. Work Specified Elsewhere 303-70
C. Samples 303-70
D. Applied Tiles 303-70
1. Materials 303-70
2. Installation 303-70
E. Suspended System 303-71
1. Materials 303-71
2. Manufacturer 303-72
3. Installation 303-72
F. Cleaning and Rejection 303-72
G. Guarantee 303-73
H. Replacement Provisions 303-73
I. Payment 303-73
303.26 Sound Attenuating Enclosures 303-73
A. Description 303-73
B. General 303-73
C. Payment 303-73
303.27 Painting 303-73
A. Description 303-73
B. General Requirements 303-74
C. Samples 303-74
D. Surface Preparation 303-74
E. Metal Surfaces 303-75
F. Clean Up 303-75
G. Paint Schedule 303-75
H. Payment 303-75
303.28 Architectural Specialties 303-75
A. Description 303-75
B. Toilet Paper Holder 303-75
C. Towel Dispenser and Mirror 303-76
D. Toilet Compartment 303-76
1. General 303-76
2. Materials and Construction 303-76
3. Shop Drawings 303-76
E. Payment 303-76
303.29 Miscellaneous Specialties 303-77
A. Description 303-77
B. Fire Extinguishers 303-77
C. Gas Mask 303-77
D. Payment 303-77

SECTION PAGE

303.30 Plumbing 303-77
A. General 303-77
B. General Requirements 303-77
C. Schematic Drawings 303-78
D. Cutting and Patching 303-78
E. Materials 303-78
F. Installation 303-79
G. Fixtures 303-79
H. Tests 303-81
I. Payment 303-81
303.31 Drainage System 303-81
A. Description 303-81
B. Storm Drains 303-81
1. Materials 303-81
2. Installation 303-82
C. Storm Drain Manholes, Catch Basins and Headwall 303-83
D. Subsoil or Perimeter Drains 303-83
E. Concrete Gutter and Ditch 303-83
F. Payment 303-84
303.32 Access Road and Paved Area 303-84
A. Description 303-84
B. Excavation 303-84
C. Asphaltic Concrete Pavement 303-85
1. Preparation of Crushed Rock Base Course 303-85
2. Asphaltic Concrete 303-86
D. Reinforced Concrete Pavement 303-88
1. Subgrade 303-88
2. Material 303-88
3. Construction 303-89
4. Opening to Traffic 303-90
5. Final Inspection 303-90
E. Coral Pavement 303-90
1. Top Course 303-90
2. Bituminous Coating 303-91
F. Concrete Curb 303-91
1. Material 303-91
2. Construction 303-91
G. Concrete Gutter 303-91
H. Header 303-92
I. Payment 303-92

SECTION PAGE

303.33 Chain Link Fence and Gate 303-92
A. Description 303-92
B. Material 303-93
1. Fabric 303-93
2. Posts 303-93
3. Top Rail 303-93
4. Bracings 303-93
5. Fittings 303-93
6. Tension Wire 303-93
7. Gate 303-93
8. Extension Arm 303-94
9. Barbed Wire 303-94
C. Installation 303-94
D. Payment 303-95

304 MECHANICAL AND ELECTRICAL

304.01 Pumps 304-1
A. Vertical Turbine Pumps 304-1
B. Horizontal Centrifugal Pumps 304-1
C. Submersible Pumps 304-1
304.02 Motors 304-1
A. Vertical Motors 304-1
B. Horizontal Motors 304-1
C. Submersible Motors 304-1
304.03 Electrical Work 304-2
A. General 304-2
1. Intent of Specifications and Drawings 304-2
2. Definitions 304-2
3. As-built Drawings 304-2
B. Scope of Work 304-2
C. Work by Others 304-2
D. Payment to Utility Companies 304-3
E. Materials and Workmanship 304-3
1. Substitute Material 304-3
2. Rules, Standards and Specifications 304-3
3. Local Ordinances and Regulations 304-4
F. Relocation of Electrical Devices 304-4
G. Equipment Shop Drawing 304-4

SECTION PAGE

304.04 Pump Station Mechanical Equipment 304-4
A. Rubber-Seated Butterfly Valves and Manual Operators . . 304-4
1. Butterfly Valve 304-4
2. Manual Operator 304-5
B. Metal-Seated Butterfly Valves 304-5
C. Check Valves 304-5
D. Chlorinators 304-5
E. Hydraulic Control Valves 304-5
F. Mechanical Bolts and Nuts 304-5

305 BACKFLOW PREVENTION ASSEMBLIES

305.01 General 305-1
305.02 Installation 305-1
305.03 Testing 305-3
305.04 Payment 305-3

306 WELL DRILLING

306.01 General 306-1
306.02 Mobilization and Demobilization 306-1
A. Payment 306-1
306.03 Well Drilling to Casing Depth 306-1
A. Payment 306-2
306.04 Well Casing 306-2
A. Payment 306-4
306.05 Filling of Annular Space 306-4
A. Grout 306-4
B. Payment 306-4
306.06 Plumbness and Alignment 306-4
A. Payment 306-5
306.07 Abandonment of Well 306-5
A. Payment 306-5
306.08 Well Drilling Below Bottom of Casing 306-5
A. Purging of Well 306-5
B. Payment 306-6
306.09 Additional Well Drilling, Cleansing and Testing 306-6
A. Payment 306-6
306.10 Well Cleansing 306-6

SECTION PAGE

306.11 Set-Up for Yield-Drawdown and Sustained Pumping Tests of Well 306-7
A. Pumping Unit 306-7
B. Payment 306-7
306.12 Testing for Yield-Drawdown and Sustained Pumping 306-8
A. Payment 306-8
306.13 Well Completion 306-9
A. Payment 306-9
306.14 Clean-Up 306-9
A. Payment 306-9

307 LANDSCAPING AND IRRIGATION

307.01 Landscaping 307-1
A. Description 307-1
B. Demolition 307-1
C. Materials 307-1
1. Plants 307-1
2. Soil 307-2
3. Fertilizers 307-2
4. Miscellaneous Materials 307-3
5. Substitution 307-3
D. Planting 307-3
1. Trees and Shrubs 307-3
2. Ground Cover 307-4
E. Planting Maintenance 307-6
1. General 307-6
2. Watering 307-6
3. Weeding 307-6
4. Mowing 307-6
5. Repairing Soil Surface and Regrassing 307-6
F. Clean Up 307-6
G. Protection 307-7
H. Final Inspection and Acceptance 307-7
I. Payment 307-8
307.02 Irrigation 307-8
A. Description 307-8
B. Explanation and Precedence of Drawing 307-8
1. Demolition 307-8
2. General 307-8
3. Pressure Lines 307-9
4. Test Spacing 307-9

SECTION PAGE

C. Materials 307-9
1. General 307-9
2. Pipe 307-9
3. Valves 307-10
4. Valve Boxes 307-10
5. Solvent Cement 307-10
6. Vacuum Breakers 307-10
7. Double Check Valve Assemblies 307-10
8. Reduced Pressure Principle Backflow Prevention Assemblies 307-11
9. Pressure/Regulators 307-11
10. Filter Unit 307-11
11. Irrigation Controller 307-11
12. Flow Meter 307-11
13. Control Wires 307-11
14. Emitters 307-11
15. Sprinkler Heads 307-11
16. Rain Sensor 307-11
D. Substitutions 307-12
E. Responsibilities 307-12
F. Construction 307-12
G. Testing 307-18
H. Clean Up 307-18
I. Inspection 307-18
J. Operation of Controller and System 307-18
K. Guarantee 307-19
L. Payment 307-19

DIVISION 300 - CONSTRUCTION

SECTION 301 INTRODUCTION

301.01 GENERAL.

Unless otherwise specified, all materials and construction of water system facilities shall be in accordance with the requirements of these standards and any subsequent amendments and additions.

301.02 AUTHORITY OF MANAGER.

The Manager will decide all questions which may arise as to the quality and acceptability of materials furnished, work performed, and as to the rate of progress of the work; all questions regarding interpretation of the plans and specifications; all questions as to the acceptable fulfillment of the contract; and all questions as to compensation.

The authority of the Manager shall include, but is not limited to, enforcing and making effective such decisions and orders which the Contractor fails to carry out promptly and diligently. The Manager shall have the authority to suspend the work wholly or in part for such periods as are deemed necessary and to suspend progress payments wholly or in part for failure on the part of the Contractor to (a) correct conditions unsafe for the general public or for the workers, (b) carry out orders given by the Officer-in-Charge, (c) perform the work in strict compliance with the provisions of the contract, (d) provide adequate supervision on the jobsite, or (e) maintain current liability insurance coverage.

301.03 MEASUREMENT AND PAYMENT.

Method of measurement and payment described under Division 300 of the Water System Standards is intended only for contracts awarded by the Department. The method of measurement and payment may be used in other projects if so specified on the plans or within the special provisions. Payment for items of work called for in the plans, special provisions and specifications for which payment is not specified in the Bid Proposal shall not be made directly but shall be included in and considered incidental to the various items in the Proposal and no additional compensation shall be made.

Should there be a discrepancy between the Bid Proposal and the other parts of the invitation for bids or the basis of payment outlined in the Water System Standards, the Bid Proposal shall govern.

301.04 QUALITY OF MATERIALS FOR CONSTRUCTION.

Unless otherwise specifically stated in the specifications, all equipment, materials and articles incorporated in the work covered by this contract are to be of the best available grade of their respective kinds free from all defects which, in the opinion of the Manager may render them unfit for use. The Contractor shall not use corrected rejected material unless approved by the Manager. The decision of the Manager regarding quality of materials for construction is final.

The Department will not accept materials that do not conform to the contract and will reject such materials. Rejected materials shall be removed from the work and replaced with materials of the required quality. Should the Contractor fail to remove such rejected materials after notice by the Manager, the latter may remove such rejected materials and deduct the expense therefore from any sum due or to become due the Contractor. Failure to reject any material or to remove any rejected material shall not relieve the Contractor from responsibility as to the quality and character of materials used or as to any other obligation imposed by the contract.

301.05 SANITATION.

The Contractor shall comply with and enforce all sanitary regulations and requirements of the State Department of Health. The Contractor shall provide toilet facilities properly secluded, and maintain same in a neat and sanitary condition for the use of project employees during the period of construction.

301.06 PROVISION FOR EMERGENCIES.

The Contractor shall take sufficient precautions to ensure the safety of the public and the employees, the protection of the works to be constructed under this contract, and adjacent structures or properties that may be injured by the processes of construction. In the event of the failure of the Contractor to take sufficient precautions, the Manager may declare an emergency and take immediate action to protect public, private, personal, or property interest. The Manager may, with or without notice to the Contractor, provide suitable protection to the said interest by causing such work to be done and materials to be furnished, and shall furnish such protection considered by the Manager to be necessary and adequate. The cost of such work shall be deducted from money due or to become due the Contractor.

301.07 ACCIDENTS.

The Contractor shall promptly report, in writing to the Manager, all accidents arising out of or in connection with the performance of the work, whether on or adjacent to the site, which caused death, personal injury or property damage, giving full details and statements of witnesses. In addition, if death or serious injuries or serious damage is caused, the accident shall be reported immediately by telephone or by messenger to the Manager.

If any claim is made by anyone against the Contractor or any subcontractor on account of any accident, the Contractor shall promptly report the facts in writing to the Manager, giving full details of the claim. It is understood and agreed that the written report of any accident shall not relieve the Contractor of responsibility and the Department shall not be held responsible.

301.08 DISTURBING MONUMENTS.

Whenever it is necessary to disturb or remove any City or County or State street survey monuments or bench marks as shown on the plans in the course of construction work, the Contractor shall immediately notify and make proper arrangements with the City or County or State for the removal and replacement of said monuments. Referencing of these monuments prior to construction may be required to facilitate replacement of said monuments. The Contractor shall hire a Land Surveyor licensed by the State to reference and restore the monuments. The licensed land surveyor shall submit the as-built monument information to the City *(to the City Department of Design and Construction for Oahu Only)*, County or State and shall also send a copy of the transmittal to the Department. The cost of referencing and restoring the monuments and the hiring of the licensed land surveyor shall not be paid directly but shall be considered incidental to the various items in the proposal.

301.09 TREES, PLANTINGS, SHRUBS AND GRASS.

All trees shall be carefully protected and kept from contact with excavation or other materials. Where it is necessary to trim trees, plants or shrubs, the Contractor shall utilize tree trimmers who are licensed by the State. Branches shall be carefully trimmed so that the trees, plants or shrubs are not damaged. All cut sections of branches shall be painted with tree seal compound. All grass, plants, trees or shrubs removed or destroyed shall be replaced by the Contractor to the satisfaction of the Department, corporation, company or any other organization owning or controlling the area where this work is to be done. All costs thereof shall be considered incidental. Should major tree roots 2-inches and greater be encountered during construction, these roots shall be cut and sealed with asphaltic paint.

301.10 RESPONSIBILITY REGARDING EXISTING UTILITIES AND STRUCTURES.

The existence and location of underground utilities and structures as shown on the plans are from the latest available data but are not guaranteed as to their actual existence or location. Other obstacles not shown on the plans may be encountered in the course of the work.

The Contractor shall make a personal investigation and inspection of the records of the owners of the utilities, supplemented by actual digging in the field if necessary, to determine the actual locations of such utilities with all their branch and service lines whether indicated on the plans or not.

Existing utilities and structures adjacent to, or crossing the water main are to remain in service and in place. If relocated for the Contractor's convenience, interruption of service shall be for a minimum period of time and shall be done at the Contractor's expense and only with the approval of the Manager.

The Contractor shall expose, verify and backfill all existing underground utilities and structures in close proximity to crossings and connections, prior to excavation of pipeline trench. The water main alignment and grade may be changed if there are conflicts with any existing underground utilities and structures, whether shown on the plans or not. Payment for work included in this paragraph shall be considered incidental to the appropriate bid items of the Proposal, and no compensation adjustments, other than for pay quantity differences, shall be made.

The Contractor is alerted to the encountering of man-made utilities and structures, whether shown on the plans or not, or which may differ in location from that shown on the plans, which may interfere with the normal method of operations. Prior to start of excavation, the Contractor shall notify all agencies and utilities and have them locate their respective lines that may be affected. The Contractor shall be held responsible for all construction and shall pay for the protection of and for all damages to existing utilities and structures.

The Contractor shall also completely protect all buildings, pavements, gutters, curbs, sidewalks, driveways, walls, fences, pipes, drains, conduits, or other structures of all classes, nature or types from settlement or other damage by installing proper underpinning, sheet piling and bracing and by taking all proper precautions during the period of construction. The Contractor shall be responsible for the settlement of any pavement, building or any other structure of any class, nature or type caused by the dewatering of trenches or from any other cause related to the work of the Contractor and shall in all cases be held liable for any damage to any building, structure or property along the line of the work.

Should it become necessary to remove, replace, obstruct, alter or use any existing pipe, hydrant, conduit, pole or other equipment or structure of any kind, the Contractor shall make all necessary arrangements with the Department, corporation, company or any other organization owning or controlling the same relative to the removal, replacement, obstruction, alteration, or use and the payment therefore. The Contractor shall furnish the Manager with evidence in writing that satisfactory arrangements have been made, not less than ten (10) calendar days before removing, replacing, altering, using or obstructing the equipment or structure concerned.

301.11 NOTICE TO PUBLIC OF CLOSING OR OBSTRUCTING PUBLIC THOROUGHFARE.

Whenever the project involves the closing or obstructing of any public thoroughfare, the Contractor shall, not later than three days prior to commencement of work on the public thoroughfare, notify the general public by means of radio announcements and through newspapers of general circulation of the commencement of construction on the public thoroughfare. Advertisements and radio announcements shall be for a period of three days. Radio announcements shall be made at least three times in each 24 hours. Advertisements in newspapers shall not be less than six inches by six inches.

Public notice as hereinabove described shall be given for each public thoroughfare obstructed along the project as designated by the Manager.

All notices, prior to publication and announcement, shall be approved by the Manager. Such notices shall be submitted for approval to the Manager at least two days prior to said publication and announcement, exclusive of Sundays and holidays. All costs for such publications and announcements shall not be paid for directly but shall be incidental to the various bid items.

301.12 CLEANING UP.

The Contractor shall throughout the duration of the project keep all streets, sidewalks and driveways free from all debris along the entire length of the project. The Contractor shall keep all streets free from dust nuisance.

Upon completion of each day's work of the construction project, the Contractor shall immediately remove all excess material and thoroughly clean the area.

All storage areas shall be restored to their original condition. All damages incurred in storing or removing materials from storage areas or to adjoining property shall be replaced or repaired by the Contractor at no cost to the Department.

All grass, plants and shrubs removed, damaged or destroyed during the course of construction shall be replaced by the Contractor.

Should the Contractor fail to comply with the foregoing provisions in a timely manner, the Manager shall have the right to have the required clean up done and to deduct the cost of same from moneys due or to become due the Contractor.

For Oahu only: Contractor shall apply, obtain approval and pay for any stockpiling permit as required by the City and County of Honolulu, Department of Planning and Permitting at no additional cost to the Department.

No separate payment for cleaning up including the replacement of all grass, plants and shrubs will be made; the compensation for such work shall be deemed to be included in the Unit Price Bids for the various items in the Bid.

301.13 PATENTED ARTICLES.

The Contractor shall be required to hold and shall hold the State, the County, the Department and all their agents and employees harmless against all claims arising from the use of any patented article, process or appliance in connection with the performance of the work.

All royalties due or becoming due for the use of any patented article, process or appliance shall be paid by the Contractor and shall be held to be included in the contract price.

301.14 EXPLOSIVES.

The Contractor shall observe all laws and all rules and regulations relating to the storage and transportation of explosives in conformance with Chapter 396, Hawaii Revised Statutes, and all rules and regulations as prescribed by the Director of Labor and Industrial Relations.

301.15 USE AND/OR DAMAGE TO PRIVATE PROPERTY (PROPERTY OWNED OTHER THAN BY THE CONTRACTOR).

Before using any property owned by anyone other than by the Contractor, the Contractor shall furnish to the Department a written affidavit from the property owner that the Contractor has permission to use their property. After the use of private property by the Contractor for a project, the Contractor shall restore the property to the condition prior to use by the Contractor and/or provide compensation for usage to the satisfaction of the property owner. Any damage to private property shall be repaired and/or compensation furnished to the satisfaction of the property owner. Prior to final acceptance of the project, the Contractor shall furnish a written affidavit to the Department from the property owner, or an authorized representative of the property owner, certifying that restoration has been completed and/or compensation has been furnished to the satisfaction of the property owner for the damage to and/or usage of their private property.

301.16 INSPECTION.

The Manager will assign an inspector for the installation of water system facilities. If inspection is required beyond the Department's regular hours or workweek, approval of the Manager shall be required. Contractor shall pay for all overtime and associated additional costs for inspectional work.

301.17 ADDITIONAL REQUIREMENTS FOR PRIVATE DEVELOPMENT PROJECTS.

For private development projects, the Department shall be notified in writing at least one week prior to commencement of work on the Project and water systems. The Contractor shall also provide the Department with four (4) sets of approved plans and specifications (for new facilities) with the notice.

SECTION 302 - WATER MAINS AND APPURTENANCES

302.01 GENERAL.

All construction of water mains and appurtenances shall be in accordance with the Water System Standards. The Contractor shall perform all work, including, but not limited to excavation, backfill, connections, chlorination and concrete work.

All work shall be arranged to prevent unnecessary or extended interruption in water service or damage to the existing water system and appurtenances.

The Contractor shall be responsible for scheduling work on the existing water system through the inspector assigned to the project, who will coordinate preparatory work with the Department's operational personnel. The Contractor shall examine the project work requirements and consult with the inspector on lead times for preparatory work required to integrate new improvements with the existing system and shall be done prior to starting any work on the project. The Contractor assumes all delay costs for failure to schedule work properly and accommodate required lead-time for system integration.

Arrangement shall be made with the Department to cut off unused water mains and laterals, meters and other appurtenances prior to commencement of clearing and grading operations. All excavation necessary for this phase of the work shall be performed by the Contractor.

No hydrants or valves shall be operated by the Contractor unless authorized by the Manager. Existing fire hydrants within the contemplated project area shall be accessible at all times to the Fire Department.

All materials required to complete the project shall be furnished and installed by the Contractor unless otherwise specified. At all connections to the existing main, like materials shall be used to replace the existing main unless otherwise specified. The Contractor shall furnish all jointing materials whether pipe, fittings, valves, hydrants or other appurtenances are installed by the Contractor or by the Department.

Two copies of a manufacturer's Certificate of Test shall be furnished by the manufacturer and/or the Manufacturer's authorized representative for all pipe, fittings, special castings and valves. The Certificate of Test shall be properly signed and shall certify that the pipes, fittings, special castings and gate valves have been manufactured in accordance with the Water System Standards. Whenever a Certificate of Test is not available, a written letter of guarantee for materials will be acceptable.

The locations of existing water mains and appurtenances shown on the Construction Plans are approximate only. Refer to Section 301.10 - RESPONSIBILITY REGARDING EXISTING UTILITIES AND STRUCTURES.

Prior to trenching for pipeline or any other water system installation, all A.C. and concrete pavement shall be “saw-cut” to the specified width. Prior to repaving of trenches, all A.C. and concrete shall be "saw-cut" to the required width prior to repaving of trenches. The required width shall include areas damaged or otherwise disturbed by the Contractor.

Prior to trenching for pipelines, and wherever a connection to an existing main is shown on the plans, the Contractor shall expose the existing main to verify the alignment and grades. This work shall be done sufficiently in advance of the trenching so that if any changes in the alignment or grade for the proposed water mains are required, the Engineer who prepared the plans can make the required changes with the approval of the Manager without delaying the project.

In Marinas and other areas where soil conditions seem unstable, soil boring samples shall be provided by the Engineer who prepared the plans.

If the materials at the pipe invert are found to be unstable, appropriate measures shall be taken by the Engineer who prepared the plans with the approval of the Manager.

In the field and prior to installation, the Contractor shall thoroughly and visually inspect all pipe and appurtenances for surface defects such as cracks, cuts, abrasions or punctures. The Contractor shall assume full responsibility for the soundness of the pipe and appurtenances installed.

Any defective pipe or appurtenances, which have been installed, shall be removed and replaced.

Pipe shall not be laid on blocks or rocks.

All pipe and appurtenances shall be thoroughly cleaned and scraped of all foreign matter and protuberances and shall be kept clean until the assembling of the joint has been completed.

Should water, mud or any other foreign material enter any joint prior to the assembly of the joint, the joint thus affected shall be opened. The joint shall be thoroughly cleaned before the pipe or appurtenances are replaced and reset.

In sections where it is necessary to dewater the trench, the trench shall be kept free of water. No water shall enter the pipe. Should water enter the pipe, the inside shall be thoroughly cleaned before continuing with the installation. Should the trench become flooded after the pipe and appurtenances have been installed, the pipe and appurtenances shall be brought back to proper alignment and bearing and properly cushioned.

Warning tape shall be installed over the entire length of the pipe, bends and fittings as specified in Section 302.03 - TRENCH BACKFILL of these Standards.

Any material to be relocated as shown on the plans shall be removed, cleaned, painted and reinstalled at the new location by the Contractor unless otherwise specified. Any material to be salvaged as shown on the plans shall be removed, cleaned, and returned to the nearest designated Department's storeyard by the Contractor. Existing manholes, valve boxes or meter boxes and concrete reaction blocks to be demolished shall be done by the Contractor as directed by the Manager.

302.02 TRENCH EXCAVATION.

A. General. Excavation shall commence at a point as directed by the Manager and shall be carried on in an orderly manner. No jumps or spaces between trenches will be permitted unless approved by the Manager.

The Contractor's attention is called to the removal of adobe or clay from the project site as specified elsewhere in these Standards.

Unless otherwise specified, the basis of payment calculations using trench widths for work on water mains and appurtenances shall be as shown in Table 300-1.

Table 300-1 - TRENCH WIDTH

Pipe Diameter (Inches)	Trench Width (Inches)
tubing < 4	12
4	24
6	24
8	24
12	24
16	30
18	36
20	36
24	42
30	48
36	54
42	66

Trench widths shall not be less than 12 inches. The Contractor may increase the trench widths subject to the Manager's approval, but will not receive additional compensation for any work resulting from the increased widths.

For tubing smaller than 4 inches, the trench width of 12 inches shall not be allowed at soldered or mechanical connections and where to be installed at a depth more than 3 feet.

Where the water main is to be encased in concrete, the width of the trench shall be the width of the concrete jacket as shown on the plans plus 12 inches. If forming for the jacket is not required, the trench width shall equal the width of the concrete jacket. The depth of trench shall be to the bottom of the concrete jacket.

Depths of trenches for water mains and appurtenances, service laterals and service connections shall be to six inches below the invert grade shown on the drawings. However, the Manager reserves the right to eliminate the six inch excavation below the invert grade. The Manager also reserves the right to raise or lower the grade or change the alignment.

Maximum cover over water mains shall be as specified in Division 100, unless directed otherwise.

The Contractor shall perform all excavation and backfill required to connect new or relocated meters to existing house services. The trench width and depth shall be 12 inches. The length of trench shall be as required or as directed by the Manager.

Refer to Section 301.10 - RESPONSIBILITY REGARDING EXISTING UTILITIES AND STRUCTURES.

Should major tree roots 2-inches and greater in diameter be encountered during construction, these roots shall be cut and sealed with asphaltic paint.

Any part of the trench excavated beyond the specified depth shall be backfilled with pipe cushion materials and thoroughly compacted. This work shall be done by the Contractor at no additional cost to the Department.

Enlargements for bell holes shall be made at all joints to provide sufficient space for completing the joints.

Where it is necessary for the Contractor to go through or under existing walls, masonry work and utilities, such structures shall be reconstructed to the original or better conditions at no additional cost to the Department.

During non-working hours, the trenches on streets shall be covered with non-skid steel plates and all lanes maintained open for traffic. Temporary steel plates for vehicular traffic shall be flush with, or have an acceptably smooth transition with adjoining pavement or sidewalk.

B. Payment. Unless otherwise specified, payment for trench excavation will be made at the Unit Price Bid per cubic yard in the Bid for TRENCH EXCAVATION (without Classification). Payment quantity shall be the calculated quantity excavated based on the specified trench width as shown on Table 300-1 for the various sizes of pipes, the actual depth of trenches required to secure the proper grade and the actual linear feet of trench excavation measured on the horizontal plane.

Depths of trenches for measurements of excavation quantities shall be made from the bottom of the base course of the proposed road to six inches below the invert grade of the pipe. If select borrow backfill is required below the base course, depth for measurement of excavation shall be made from the bottom of the select borrow backfill to six inches below the invert of the pipe, provided there is sufficient protective cover over the pipe. If there is insufficient cover, the select borrow backfill shall be placed and well compacted before trenching for the water main. The depth for measurement of excavation shall then be from the top of the select borrow to six inches below the invert of the pipe.

Where the pipe trenches are located in previously improved areas in which the pavement will not be affected by the proposed construction or in areas outside of the improvement, the depth for measurement of excavation shall be made from the existing ground to six inches below the invert of the pipe.

Where pipes are located in fill area, the fill shall initially be well compacted to the subbase of the proposed road prior to trench excavation. The depth for measurement of excavation shall be from the bottom of the subbase to six inches below the invert of the pipe, except at locations where the excavation to six inches below the pipe invert is eliminated by the Manager, the measurement for trench excavation shall then be made to the invert grade of the pipe.

The quantity of excavation for pipe encased in concrete jacket shall be the quantity excavated (exclusive of trench excavation), computed to the specified width of the jacket plus 12 inches and the depth to the bottom of the jacket. If forming for the jacket is not required, the width for payment shall be the specified width of the concrete jacket. Unless otherwise specified, payment for excavation for concrete jacket will be made at the Unit Price Bid for TRENCH EXCAVATION (without Classification).

Unless otherwise specified, no separate payment for additional excavation required for bell holes, exposing connections and other utilities will be made; the compensation for such work shall be deemed to be included in the Unit Price Bid for TRENCH EXCAVATION (without Classification).

The Unit Price Bid for TRENCH EXCAVATION (without Classification) shall be full compensation for all labor, materials, tools and equipment necessary for trench excavation for installing, removing, and lowering of water mains and appurtenances; removal of “adobe”, clay, mud, or other undesirable or deleterious materials; installation of pipe cushion, select fill, and backfill of the pipe trenches; installation of warning tape; excavation for concrete reaction and test blocks, concrete jackets, manholes, connections, and fire hydrants; dewatering, sheeting, sheathing, blasting, disposal of material and all other incidentals required to complete the work.

302.03 TRENCH BACKFILL.

A. General. In areas where "adobe" or other material excavated is determined by the Manager to be deleterious, and suitable surplus excavated backfill material from the Project is not sufficient to complete the backfill, additional graded material shall be used to complete the work.

No "S4C" crusher screening shall be used for backfill and pipe cushion material in areas where the invert of the pipe is at or lower than the 4-foot elevation, USGS Datum, or in areas where the ground is wet.

Ocean water shall not be used in compacting the trench backfill material.

Should dirt or debris fall into the trench at any time prior to or after the pipe cushion has been placed, the dirt or debris shall be immediately removed before proceeding with the backfill or compaction.

Before backfill is deposited, water shall be added to adjust the moisture content to optimal for compaction.

For installations in State DOT right-of-ways or highways, trench backfill material installation shall meet applicable requirements of “THE STANDARD SPECIFICATIONS FOR PUBLIC WORKS CONSTRUCTION”, of the counties of the State of Hawaii and “STANDARD SPECIFICATIONS FOR ROAD AND BRIDGE CONSTRUCTION”, of the Hawaii Highways Division, DOT.

Warning tape shall be installed over centerline of the pipe, bends and fittings below the pavement structure or 12 inches from the finished grade unless otherwise specified on the construction plans along the entire length of trench.

B. Preparation of Trench Bottom. After the trench has been excavated to the proper depth of six inches below the invert grade (except where this has been eliminated by the order of the Manager), the trench bottom shall be backfilled to the required invert grade with pipe cushion material. Whether backfilled in this manner or not, the trench bottom shall be leveled off or shaped to obtain a smooth bed along the laying length of the pipe.

Wherever a firm foundation is not encountered at the bottom of the trench, the soft or otherwise undesirable materials shall be removed as directed by the Manager. The trench shall then be backfilled and compacted to within six inches of the pipe invert with trench stabilization material as specified in Section 302.07 - MUD REMOVAL AND CRUSHED ROCK TRENCH STABILIZATION.

C. Prior to Testing. After cushion material has been placed on the trench bottom and mains, service laterals and service connections have been installed, pipe cushion material shall be deposited in the trench simultaneously on both sides of the pipe to the required height.

The joints of the pipe, other than concrete cylinder pipe, may remain exposed during the pressure test of the main unless the Contractor exercises the option (with the approval of the Manager) to backfill the joints. Whether the joints are backfilled or not, the Contractor shall be responsible to locate and stop any leakage that the pressure test may reveal.

D. After Testing. Upon completion of testing of mains and appurtenances, the following steps shall be observed unless otherwise specified:

1. For mains 12-inches and smaller, copper pipes, service laterals, service connections and appurtenances, backfilling may commence with pipe cushion material to 6 inches above the top of pipe. For pipe inverts below 4-foot elevation, USGS Datum or where water is encountered, backfilling with pipe cushion material shall continue to 12 inches above the top of pipe.

2. For mains larger than 12 inches, pipe cushion material shall be placed to 12 inches above the top of pipe.

3. In the process of backfilling to the heights specified above the pipe, the cushion material shall be compacted with water using a 1½-inch nozzle curved to the circumference of the installed pipe and of sufficient length to reach the invert of pipe. Compaction will be conducted in this manner along the entire length of pipe on alternate sides with each side compacted four times. Settlement greater than 1/6 the diameter of pipe will require additional material and compaction.

4. For backfill in State Rights-of-Way, compaction of backfill material by ponding or jetting is not permitted unless specifically authorized. The Contractor retains the responsibility to properly consolidate and compact the pipe cushion material.

E. Completion of Backfill. After the trench has been backfilled with pipe cushion material to the height specified above, power equipment shall be used to complete the backfill. Method of compaction shall be approved by the Manager.

Compaction of trench backfill shall meet applicable requirements of "THE STANDARD SPECIFICATIONS FOR PUBLIC WORKS CONSTRUCTION", of the counties of the State of Hawaii and “STANDARD SPECIFICATIONS FOR ROAD AND BRIDGE CONSTRUCTION”, of the Hawaii Highways Division, DOT.

Before commencing power backfilling, a point in the trench shall be selected and backfilled by hand to within 12 inches of the top of the trench. The natural repose of this backfill will be in a slope running down the trench in both directions from the high point. Power equipment shall then deposit the backfill so as to cause the backfill to slide gently down the slopes as the work progresses. This power backfilling shall be carried to within 12 inches of the top of the trench. Materials used in this operation shall contain no stone, rock, concrete or other material larger than 6 inches in its greatest dimension and shall contain no vegetable matter or debris of any kind. No “cinders”, "adobe" or similar material shall be used. Compaction shall not be less than 95% of the material's maximum density as determined by latest edition of ASTM Test Designation D-1557.

The remaining 12 inches of trench shall then be backfilled and tamped with approved pneumatic backfill tampers. Wherever the trenches are excavated below roadways, the above remaining 12 inches of trench shall be backfilled in accordance with all applicable City or County Ordinances, State and Federal Laws.

The backfill shall be maintained at the proper grade until paving is completed.

In locations where pipe trench is excavated in existing pavement, the pavement shall be maintained at the proper grade by placing and compacting slow curing asphalt (SC-4) until the final repaving is completed.

F. Backfill at Valve Boxes. Prior to backfilling at those valve boxes where risers are required for the purpose of chlorinating the water mains, the Contractor shall install such risers. These risers including the necessary appurtenances shall be furnished by the Contractor.

After the risers have been installed, the region around these valve boxes may be backfilled temporarily.

Upon completion of the chlorination work, the Contractor shall backfill these areas permanently. Ball corp shall remain in place.

Materials for backfilling around the valves shall be black sand, sand, coral chips, or similar granular material approved by the Manager.

G. Payment. No separate payment for pipe cushion, trench backfill, backfill at valve boxes, and warning tape will be made; the compensation for such work shall be deemed to be included in the Unit Price Bid for TRENCH EXCAVATION (without Classification).

The Manager shall have the authority to withhold payment due or to become due for excavation or slow curing asphalt until the Contractor submits test results that compaction work was properly completed.

302.04 SHEATHING.

A. General. Wherever necessary, excavations shall be properly sheathed and braced to render it secure. Where sheathing is required, the trench shall be widened beyond the specified width as shown on Table 300-1 to provide sufficient space for installing pipes and assembling the joints.

All sheathing and bracing shall be removed before completing the backfill.

B. Payment. No separate payment for sheathing and bracing, or for the additional excavation, pipe cushion, and trench backfill required because of the sheathing or bracing work; the compensation for such work shall be deemed to be included in the Unit Price Bid for TRENCH EXCAVATION (without Classification).

302.05 DEWATERING.

A. General. In locations where water is present in the trench, the Contractor must dewater by pumping or other means to keep the trench free of water during the installation of pipe cushion, the pipe itself, the testing, connection, relocation, lowering of the water mains, and until backfilling is completed to a point 12 inches above the top of pipe. The Contractor shall provide proper facilities for delivering all pumped water to existing underground drains. The Contractor shall comply with all NPDES requirements and other applicable regulations.

B. Payment. No separate payment for dewatering will be made; the compensation for such work shall be deemed to be included in the Unit Price Bid for TRENCH EXCAVATION (without Classification).

302.06 "ADOBE" OR CLAY.

A. General. No "adobe", clay or other unsuitable material excavated during the progress of the work shall be used as backfill material. The Manager shall be the sole authority as to what excavated material shall be suitable for backfilling.

All unsuitable material excavated from the trench shall be removed from the Project site and replaced with material approved by the Manager.

B. Payment. Exclusive of the payments due for work defined in Section 302.07 - MUD REMOVAL AND CRUSHED ROCK TRENCH STABILIZATION, no separate payment for excavation and removal of adobe, clay or other unsuitable material from the pipe trench or for necessary backfill material approved by the Manager to replace those materials will be made; the compensation for such work shall be deemed to be included in the Unit Price Bid for TRENCH EXCAVATION (without Classification).

302.07 MUD REMOVAL AND CRUSHED ROCK TRENCH STABILIZATION.

A. General. All mud or other undesirable material as determined by the Manager encountered in the bottom of the trench shall be removed for a maximum depth of 30 inches below the pipe invert grade and bottom of manhole slab. These materials shall be removed from the Project site and disposed per City and State requirements. The trench shall be refilled and compacted to within six inches of the invert grade with crushed rock ranging in size from 2½ to 3/4 inches wrapped in geotextile fabric.

If mud or unsuitable material is found below 30 inches lower than the invert grade or bottom of the manhole slab, the Contractor shall immediately notify the Manager, who will determine if additional excavation and crushed rock installation should continue or that a different trench stabilization method should be done.

B. Payment. No separate payment for excavation to remove mud or undesirable materials from the pipe trench will be made; the compensation for such work shall be deemed to be included in the Unit Price Bid for TRENCH EXCAVATION (without Classification).

Unless otherwise specified, payment for the furnishing and installation of crushed rock backfill for trench stabilization work will be made at the Unit Price Bid per cubic yard based on the actual quantity of CRUSHED ROCK placed, measured in accordance with the specified trench width as shown on Table 300-1 and the actual depth required. The Unit Price Bid shall be full compensation for all labor materials, tools and equipment for all hauling, handling, placing and all other incidental materials and work necessary to complete the work.

302.08 BLASTING.

A. General. When explosives are necessary for prosecution of the work and allowed by the Manager, the Contractor shall comply with all OSHA and safety requirements so that life and property will not be endangered. All blasting shall be done without the use of common fuse. All explosives shall be stored and used in compliance with all applicable laws. The Contractor shall exercise all precautions in blasting adjacent to all existing wells, reservoirs, pump stations and tunnels. All cost necessary to repair damages caused by blasting shall be borne by the Contractor.

B. Payment. No separate payment for blasting will be made; the compensation for such work shall be deemed to be included in the Unit Price Bid for TRENCH EXCAVATION (without Classification).

302.09 EXCAVATION FOR MANHOLES.

A. General. Excavation for manholes shall be to the dimensions as shown in the Standard Details.

B. Payment. Unless otherwise specified, the lateral limits for payment of excavation for manholes will be measured to six inches beyond the neat structure of the wall and to bottom of bottom floor slab as shown in the Standard Details. Payment will include compensation for excavation for drain holes or sumps.

Unless otherwise specified, payment for excavation of manholes will be made at the Unit Price Bid for TRENCH EXCAVATION (without Classification).

302.10 EXCAVATION FOR THRUST BLOCKS, BEAMS AND TEST BLOCKS.

A. General. Wherever concrete thrust blocks, beams or test blocks are required, the necessary excavation shall be performed by the Contractor as directed by the Manager.

B. Payment. The quantity of excavation for thrust blocks, beams or test blocks shall be the quantity excavated (exclusive of the theoretical payment quantity for trench excavation), computed on the theoretical dimension limits set by the Manager. Unless otherwise specified, payment for excavation for reaction and test blocks will be made at the Unit Price Bid for TRENCH EXCAVATION (without Classification).

302.11 SURPLUS EXCAVATION.

A. General. The Contractor shall observe all City or County ordinances and State and Federal laws relating to the disposal of surplus materials from excavation.

The Contractor shall remove all surplus excavation after all necessary backfill has been completed and all pavements, driveways, sidewalks and other structures have been replaced.

B. Payment. No separate payment for the disposal of surplus excavation will be made; the compensation for such work shall be deemed to be included in the Unit Price Bid for TRENCH EXCAVATION (without Classification).

302.12 DUCTILE IRON PIPE.

A. General. Prior to the installation of the pipe, the circumference of the spigot ends shall be marked showing the depth of the bell of the pipe.

After the trench bottom has been prepared, each pipe shall be laid so that the barrel of the pipe shall have bearing along its laying length with the bell end properly set to grade and alignment. The spigot end of the pipe shall then be centered and firmly embedded against the bell end of the pipe previously laid. There shall be uniform clearance around the bell. The pipe shall be firmly held in place by proper blocking on each side of the pipe.

For cathodic protected pipes, during installation, the pipes and appurtenances shall be handled only with slings cushioned along the areas coming in contact with the pipe or appurtenances to protect the pipe coating. The coating shall be inspected and repaired as specified in Division 500 as applicable to the project.

No pipe "springing" or "buckling" into place between installed pipe or special castings shall be allowed.

Whenever it is required to cut ductile iron pipe 16-inches in diameter and larger, the pipe shall be saw cut.

All cut ends of the ductile iron pipe shall be ground even, free of all projections.

Whenever it is necessary to install pipe sleeves, the space between the ends of the adjoining pipes shall be filled by inserting a full ring piece. The filler piece shall be of the same material as the pipe.

Unless otherwise specified, all direct buried ductile iron pipes and fittings shall be encased in polyethylene loose wrap installed by the Contractor. Installation of polyethylene loose wrap shall be in accordance with AWWA C105. The wrap shall consist of an 8-mil thickness polyethylene tube or flat sheet installed to completely encase the pipe and fittings and secured thereto with 2-inch wide plastic adhesive tape. *(For Oahu Only: Install 2 layers of 8 mil polyethylene wrap) (For Hawaii Only: Only ductile iron pipes and fittings installed at invert elevation 5 feet or lower shall be encased in polyethylene or as directed by the Manager).*

On pipes hung on bridges, one inch space or as called for on the plan shall be left between pipes within sleeve at midpoint of span. Mechanical or push-on joint ductile iron pipe with bitumastic coating shall be used on all bridge crossings. The entire length of exposed pipe shall be coated with an approved bitumastic paint.

When pipe laying is interrupted or delayed, all openings shall be tightly closed with cast iron removable plugs or caps. The plugs shall be held securely in place.

See Division 500 for all corrosion requirements including testing as applicable to the project and as shown on plans and specifications.

B. Mechanical Joint. In making the joint, the bell and the spigot ends of the pipe as well as the rubber gasket shall be thoroughly cleaned before assembly. The gland, followed by the gasket, shall be placed over the spigot end of the pipe. The spigot end of the pipe shall be inserted into the bell of the pipe previously laid. The small side of the gasket and the lip side of the gland shall face the bell. The gasket shall then be pushed into position so that it is evenly seated in the bell. The gland shall be moved against the face of the gasket.

Bolts shall be inserted with threaded ends on the gland side. Nuts shall be screwed on by hand and made hand tight in pairs, 180 degrees apart. Bolts shall be alternately tightened (180 degrees apart) to the required tension with an ordinary ratchet wrench, beginning at the bottom, then the top and so on. The ranges of bolt torques to be applied shall be as indicated in Table 300-2 below.

Table 300-2 - BOLT TORQUE	
Bolt Size (Inches)	Range of Torque (Ft. Pounds)
5/8	45-60
3/4	75-90
1	85-100
1-1/4	105-120

Table 300-3 indicates the lengths of wrenches that should satisfactorily produce the ranges of torques in Table 300-2.

Table 300-3 - WRENCH LENGTH	
Bolt Size (Inches)	Length of Wrench (Inches)
5/8	8
3/4	10
1	12
1-1/4	14

When the joint is assembled, the distance between the face of the bell and the face of the gland shall be uniform all around the pipe.

All stainless steel bolt and nut threads shall be pre-coated with anti-seizing graphite compound before installation.

C. Push-on Joint. The gasket and gasket seat in the socket of the pipe shall be wiped clean. The gasket shall be placed in the socket with the large round end entering first. The gasket shall be sprung into place. The groove of the gasket shall fit over the bead in the seat.

A thin film of non-toxic lubricant, supplied by the manufacturer, shall be applied to the inside of the gasket that comes in contact with the pipe. A thin film of non-toxic lubricant may also be applied to the outside of the plain end of the pipe.

The joint shall be assembled by entering the plain end of the pipe past the gasket until contact is made with the base of the socket.

When pipes are cut in the field, the outside edges of the cut end shall be tapered with a coarse file or portable grinder. The taper shall be about 1/8 inch at an angle of about 30 degrees with the centerline of the pipe.

D. Flanged Ends. All flanged pipes, fittings and valves shall be installed to the lines and grade shown on the plans. The face of flanges shall be true and free of projections and shall be cleaned of all rust and foreign matter. Gaskets shall be "full face" carefully cut to fit flanges and bolt holes. "Flange-Tyte" gaskets may also be used. Flanges shall be brought up to true alignment and fit with uniform tension on all bolts. All stainless steel bolt and nut threads shall be pre-coated with anti-seizing graphite compound before installation.

E. Payment. Payment for the furnishing and installation of the various sizes of DUCTILE IRON PIPE (mechanical joint, push-on joint or flanged joint) will be made at the respective Unit Price Bids per linear foot based on the actual linear feet of DUCTILE IRON PIPE installed (exclusive of valves, fittings, bends and adapters), cleaned or pigged and successfully hydrotested. *(For Maui only: Lineal footage per plan stations without deduction for valves and fittings.)*

The Unit Price Bid for the furnishing and installation of DUCTILE IRON PIPE (mechanical joint, push-on joint or flanged joint) shall be full compensation for all labor, materials, tools and equipment for all handling, hauling, unloading, placing, cutting, jointing, cleaning or pigging, hydrotesting, dewatering, painting and all other incidentals required to complete the work.

The Unit Price Bids shall include corrosion control items as applicable to the project.

For Oahu only: Payment for the furnishing and installing of DUCTILE IRON PIPE WATER MAIN CROSSING AT BRIDGES shall be made at Lump Sum Bid. The Lump Sum Bid for the water main crossing shall include all materials and appurtenances, coring through abutment walls and diaphragms, pipe sleeves, drilling, pipe hangers, ductile iron pipe and fittings, rust-deterring paint, bracket for and protective cage, air relief valve, steel structural supports, aluminum cover, support brackets and straps, concrete work, reinforcing steel and all other appurtenances in accordance with the design on plans.

302.13 CONCRETE CYLINDER PIPE.

A. General. All concrete cylinder pipe shall generally conform to the lines and grades shown on the plans. The concrete cylinder pipe manufacturer's layout schedule for the installation of the various sizes of pipe and appurtenances shall be considered as part of the contract drawings. The layout schedule shall be submitted to the Manager for approval prior to manufacture and installation. Prior to the submittal, the Contractor is required to probe all utility crossings to verify the location and elevation of all existing utilities. The submittal shall consist of six sets of a tabulated layout schedule and shall incorporate stationing and grade lines shown on the construction plans, information developed from the field utility probing, and shall include fabrication detail drawings conforming to details shown in the standard details for each pipe and fitting.

Revisions to the construction plans and layout schedule may be required due to conflicting locations of utility crossings. Other than for bid item quantity changes, no separate additional compensation shall be made for such revision.

Pipes, fittings and specials shall be handled carefully and shall not be dropped, bumped or unnecessarily jarred. Blocking or holddowns used during shipment shall prevent movement or shifting and shall limit deflection of the pipe. The ends of pipes, fittings and specials shall be bulkheaded or covered with plastic sheet or equal at all times in order to prevent excessive drying of the linings.

All pipes, fittings and specials delivered at the job site showing cracks and checks in the lining or coating during and up to the time of installation shall be rejected.

Prior to the installation of pipes or fittings in areas where the invert grade of the pipe is at or lower than the four-foot elevation, USGS Datum, or in locations indicated on the plans or where water is encountered, the Contractor shall apply cement slurry to the exterior coating of the pipes and fittings. The slurry shall be composed of one sack Portland cement to not more than five gallons of water. The slurry coat shall be applied by brushing or mopping at least 24 hours but not more than 48 hours before installation of the pipes and fittings.

During installation, the pipes and appurtenances shall be handled only with slings cushioned along the areas coming in contact with the pipe or appurtenances to protect the concrete surface.

The exterior corrosion coating shall be inspected and repaired as specified in DIVISION 500 and as applicable to the project.

Prior to assembly, the spigot end of the pipe shall be marked showing the depth of the bell of the pipe to assure the proper entry of the spigot into the bell.

After the trench bottom has been prepared, the pipe shall be carefully lowered into the trench. Although no bell holes are required, a slight depression shall be made to keep both bell and spigot ends clean during installation and to facilitate outside mortaring of the field joint.

With both sections in a level position, the inside surface of the bell shall be coated liberally with a non-toxic lubricant supplied by the manufacturer. The rubber gasket shall then be seated in the groove on the spigot end. The bell and spigot shall be free of any dirt or sand.

Any excess lubricant shall be removed.

The joint can then be closed by pushing the spigot into the bell. The closing force necessary to seat the pipe neatly into position shall be obtained by moving the crane or boom in a direction parallel to the pipe and toward the section previously laid.

Prior to the mortar grouting of the field joint, a feeler gauge shall be inserted to ascertain that the gasket is properly seated in the groove. If the gasket is not properly seated, the joint shall be disassembled and the trouble corrected. An additional check shall be made with the feeler gauge to determine the distance from the end of the bell to the gasket at any point. Minimum gauge entry shall be 1¾-inches for pipes 24-inches or less in diameter and 2 ¼-inches for pipes larger than 24-inches in diameter.

Joint bonds are required in all areas that cement-coated pipe are installed. See Division 500 for all requirements including testing as applicable to the project.

Cement mortar for the interior and exterior linings which come in contact with fresh cement mortar shall be dampened prior to the application of the mortar. All cement water and sand shall conform to the requirements specified under concrete work.

On 24-inch and larger pipes, ½-inch metal spacer blocks shall be placed inside the bell to maintain a joint recess. After the spigot is installed into the bell, the blocks shall be removed and the recess pointed from the inside with cement mortar and troweled smooth.

On 20-inch and smaller pipes, the edge of the lining of the bell end shall be "buttered" with cement mortar prior to final assembly. Cement mortar for "buttering" and pointing shall contain only sufficient water to compound a mortar that maintains its own shape when "molded" by hand pressure. After the joint is closed, a rubber sewer ball or a squeegee ball shall be pulled through the pipe to remove the excess mortar extruded by the "buttering" operation.

The exterior of the joint shall be grouted with mortar. A pouring form shall be made by wrapping roofing paper or nylon "diapers" around the joint. The roofing paper or diapers shall be fastened in place with wire or steel strap. Cement mortar shall be poured into the joint recess from a hole in the top of the paper form. To prevent air pockets, the mortar shall be poured from only one side and worked around the pipe with wires.

After the joint has been completed, the exterior surface of the joint shall be coated, if required, with cement slurry as called for elsewhere in these Standards as protective coating for the pipe.

For pipes 24-inch and larger, not more than three (3) lengths of pipe shall be laid without prior mortaring of the joints.

When pipe laying is stopped, the last assembled joint shall not be mortared.

Immediately after each section is installed, the pipe shall be backfilled with pipe cushion material to protect the pipe from excessive expansion and contraction resulting from temperature changes.

Wherever two consecutive valves are installed, the pipe between these valves shall be filled with water immediately after installing the valves. The water shall remain in the pipe until the time for testing, chlorination or as directed by the Manager.

B. Cement Mortar Mix. Cement mortar mix shall be as specified in Table 300-4:

Table 300-4 - CEMENT MORTAR MIX

Purpose	Proportion (By Volume)	Remarks
Joint and Field Closures	1 part Portland Cement to 3 parts sand.	Exterior
	1 part Portland Cement to 2 parts sand.	Interior
Cement Slurry	1 94-lb. Portland Cement to 5 gallons water.	Exterior where pipes are laid under water.
Buttering	1 part Portland Cement to 2 parts fine sand.	Interior for 20" and smaller diameter pipe.

C. Field Cutting and Welding - Station Adjustment and Closures. The Contractor may find it necessary to cut and adapt pipe in the field for station adjustments and closures to conform with the pipe manufacturer's layout drawings, for making vertical and horizontal alignment changes due to unforeseen field condition and when pipes are laid for more than one station. After determining the length of pipe to be cut, the cement mortar coating shall be removed and the spiral steel reinforcement cut with cold chisel. For pretensioned concrete cylinder pipes, the spiral steel reinforcement shall be welded to the steel cylinder prior to cutting the reinforcement. The exact cut line shall be scribed on the steel cylinder and accurately cut. The butt strap shall be fitted and centered over the ends of the pipe sections at least three inches. The butt strap shall be field welded to both the inside, where feasible, and outside of the pipe sections along both edges by full circumferential fillet welds. The closures shall be coated with cement mortar to the same thickness as the pipe section. The interior coating shall be steel troweled to a dense smooth finish. The exterior coating shall be cured for at least 24 hours.

D. Payment. Payment for the furnishing and installation of the various sizes of CONCRETE CYLINDER PIPE will be made at the respective Unit Price Bids for CONCRETE CYLINDER PIPE based on the actual linear feet of pipe installed (exclusive of valves, fittings, bends and adapters), cleaned or pigged and successfully hydrotested.

The Unit Price Bids for the furnishing and installation of CONCRETE CYLINDER PIPE shall be full compensation for all labor, materials, tools and equipment for all handling, hauling, unloading, placing, additional curing, cutting, jointing, testing, dewatering and all other incidentals necessary to complete the work. *(For Oahu only: All concrete cylinder pipe shall be Class 250.)*

302.14 PLASTIC PIPE.

A. General. Plastic pipe shall be installed at the location and to the lines, grades and details shown on the plans. No bending of plastic pipe shall be allowed unless specified otherwise.

Conducting cable such as copper toning wire shall be installed over the entire length of plastic pipe for "toning" purpose. Unless otherwise specified, conducting cable shall be solid one piece (no strands) copper wire, No. 8 gauge (American or Brown and Sharpe Gage) or larger. The wire shall be terminated at valve boxes or manholes and installed in the pipe trench at a location 2 feet 6 inches maximum from the finish grade.

The conductive cable shall not be tied to or in contact with the gate valves or any other metallic fitting. The wire ends to be terminated in a valve box, meter box, or manhole as detailed in Division 500 as applicable to the project.

Whenever a cable is required to be joined, the splice will be made by tying the two ends in a knot and taping with electrical tape or other methods approved by the Manager.

Whenever the cable is required to be jointed it shall be done mechanically using a split-bolt connector and/or soldered and taped. The conductive cable shall not contact the gate valves or any other metallic appurtenance or fitting.

When tapping for service connections and air relief valves, service saddles or tapped tees shall be used. The installation of service saddles or tapped tees shall be as specified for service laterals and connections. *(For Oahu only: Service saddles allowed only for tapping to existing mains and taps for ball corps at main valves and air relief valves where valves are to be installed in manholes.)*

For plastic pipes, the installation according to the plans and specifications may require additional fittings, special couplings, and items of work not specified in the plans and specifications due to the limited ability of plastic pipes to deflect at the joints. Bending of plastic pipes will not be allowed. All polyvinyl chloride (PVC) pipe deflections shall be accomplished only by the use of Special PVC deflection couplings. Deflection around curves shall be accomplished only by the use of PVC deflection couplings.

Any additional design modification and/or work required due to the limited ability of plastic pipes to deflect at the joints shall be the responsibility of the Contractor and shall be approved by the Department.

B. Payment. Payment for the furnishing and installation of the various sizes of PVC PIPE, including all necessary joint accessories, will be made at the respective Unit Price Bids per linear foot based on the actual linear feet of PVC PIPE installed (exclusive of valves, fittings, bends and adapters), cleaned or pigged and successfully hydrotested.

The Unit Price Bids for the furnishing and installation of PVC PIPE shall be full compensation for all labor, materials, tools and equipment for all handling, hauling, unloading, placing, cutting, jointing, testing, dewatering, painting, installing, conducting cable, and service saddles and all other incidentals required to complete the work.

No separate payment for the furnishing and installation of additional fittings, special couplings, gaskets, lubricants and items of work not specified in the plans and specifications due to the limited ability of PVC pipes to deflect at the joints will be made; the compensation for such work shall be deemed to be included in the Unit Price Bid for PVC PIPE.

Measurement and payment for ductile iron fittings shall be as specified in Section 302.15 - FITTINGS AND SPECIALS (DUCTILE IRON, CONCRETE CYLINDER, PLASTIC PVC PIPE) of the Water System Standards.

For Oahu only for service connections and air relief valves: Payment for service saddles, if allowed by the Department, will be made at the respective Unit Price Bid based on the actual number of SERVICE SADDLES installed and tested. Payment for tapped tees or bossed tees (with tap sizes specified) will be made at the Unit Bid Price per pound of DUCTILE IRON FITTINGS based on the total weight of the tapped tees installed and tested.

302.15 FITTINGS AND SPECIALS (DUCTILE IRON, CONCRETE CYLINDER, PLASTIC PVC PIPE).

A. General. The Contractor shall furnish and install the various types of fittings and specials (ductile iron or concrete cylinder or PVC) at locations shown on the plans or as directed by the Manager. Installation shall be in the same manner prescribed elsewhere in these Standards for the various types of pipe joints. *(For Oahu only: Buried ductile iron fittings shall be encased with 2 layers of 8 mil polyethylene wrap.)*

For concrete cylinder pipes, fittings may be fabricated to be integral with a straight section of pipe with the understanding that any field adjustments required will be done at no cost to the Department.

Copper toning wire shall be installed at all PVC fittings.

B. Payment. Payment for the furnishing and installation of DUCTILE IRON FITTINGS will be made at the Unit Price Bid per pound or per each fitting, based on the total body weight of the fittings or the actual number of DUCTILE IRON FITTINGS installed and tested.

The total weight of the various sizes and types of DUCTILE IRON FITTINGS shall be the sum of the body weights of the fittings based on the weights given in the latest edition of the "Handbook of Ductile Iron Pipe" by the Ductile Iron Pipe Research Association. If the weight of any fitting is not given in the handbook, the weight shall be based on the actual weight marked on that fitting. Weights of jointing accessories are considered incidental.

Payment for furnishing and installing CONCRETE CYLINDER FITTINGS AND SPECIALS will be made at the respective Unit Price Bids based on the actual number installed and tested.

Payment for furnishing and installing PVC FITTINGS inclusive of copper toning wire will be made at the respective Unit Price Bid based on the actual number installed and tested.

Payment for FLANGED BY BELL ADAPTERS and FLANGED DISMANTLING JOINTS will be made at the respective Unit Price Bids based on the actual number installed and tested. Flanges shall be per ANSI B16.1, Class 125 or 250.

The Unit Price Bids for furnishing and installing fittings and specials (DUCTILE IRON or CONCRETE CYLINDER or PVC) shall be full compensation for all labor, materials, tools and equipment for all handling, hauling, unloading, placing, poly-wrapping, jointing, testing, bracing and blocking and other incidentals necessary to complete the work.

302.16 GATE VALVES AND BUTTERFLY VALVES.

A. General. The Contractor shall furnish and install all gate valves and butterfly valves at locations shown on the plans. Unless otherwise specified, the installation shall be in accordance with the Standard Details.

Unless otherwise specified, all direct buried valves shall be encased in polyethylene loose wrap installed by the Contractor. Installation of polyethylene loose wrap shall be in accordance with AWWA C105. The wrap shall consist of an 8-mil thickness polyethylene tube or flat sheet installed to completely encase the valve and secured thereto with 2-inch wide plastic adhesive tape. *(For Oahu only: Install 2 layers of 8 mil polyethylene wrap.) (For Hawaii only: Only valves installed at invert elevation 5 feet or lower shall be encased in polyethylene or as directed by the Manager.)*

All valves shall be thoroughly inspected to insure proper working order before being installed. When valves show leakage at any point under pressure tests, the valve will be rejected and shall be replaced at no additional cost to the Department.

All gate valves installed with plastic pipe shall be secured in position with reinforced concrete blocks and non-corrosive straps. Straps, including bolts, nuts and washers shall be as shown in the Standard Details. Typical detail of the valve anchorage shall be as shown in the Standard Details.

Only proper standardized tools shall be used in operating valves.

Valves in manholes shall be supported on concrete or brick pedestals as shown on the Standard Details.

Proper size ball corp on both sides of the valve shall be installed in the main. Wherever the ball corp at the valve must be used for flushing the main, the size of the ball corp shall be the maximum size permitted for the main. The size of the ball corp shall be as shown in Table 300-5. Where valves are to be backfilled, the ball corp may be removed and replaced with tapered threaded brass plugs.

Ball corps shall be as specified under Division 200, Section 208 - SERVICE LATERALS AND APPURTENANCES.

Table 300-5 - REQUIRED BALL CORP SIZES AT MAIN VALVES

Diameter of Main (Inches)	Size of Ball Corp
4	1”
6	1”
8	1-1/2”
12	1-1/2”
16	1-1/2”
20	1-1/2”
24	2”
30	2”
36	2”
42	2”

After the manhole has been completed or prior to the installation of valve boxes, all valves shall be cleaned.

B. Payment. Payment for furnishing and installing GATE VALVES and BUTTERFLY VALVES will be made at the respective Unit Price Bids per each valve, based on the actual number of the various sizes and types of valves installed and tested.

The Unit Price Bids for furnishing and installing GATE VALVES and BUTTERFLY VALVES shall be full compensation for all labor, materials, tools and equipment for all handling, hauling, unloading, placing, jointing, testing, painting and all other incidentals necessary to complete the work.

No separate payment for the furnishing and installation of (1) ball corp(s) and brass plugs for flushing and chlorinating the mains, (2) reinforced concrete anchor blocks and straps (including bolts, nuts and washers and the excavation for the blocks) to secure gate valves in position on plastic pipeline or PVC pipes, (3) by-pass valves, or (4) risers for flushing and chlorination will be made; the compensation for such work shall be deemed to be included in the Unit Price Bid for GATE VALVES and BUTTERFLY VALVES.

For Oahu only: Payment for TAPPING VALVES AND SLEEVES will not be made separately but shall be included in the Lump Sum Bid for water main connection.

302.17 AIR RELIEF VALVES/COMBINATION AIR VALVES (ARV) AND APPURTENANCES.

A. General. The Contractor shall furnish and install ARVs and appurtenances at the locations shown on the plans or directed by the Manager. The installation shall be in accordance with the Standard Details.

The term "appurtenances" shall mean to include all fittings, nipples, unions, ball corp and vertical check valves if required.

Whenever ARVs (excluding combination ARVs) are to be installed in a potentially immersed location, a vertical check valve of the respective size and class shall be installed as directed by the Manager.

All ARVs shall be thoroughly cleaned.

B. Payment. Payment for furnishing and installing ARVs and appurtenances will be made at the Unit Price bid per each unit, based on the actual number of AIR RELIEF VALVES and appurtenances installed.

The Unit Price Bid for furnishing and installing ARVs and appurtenances shall be full compensation for all labor, materials, tools and equipment for all handling, hauling, unloading, placing, testing, painting and all other incidentals necessary to complete the work.

No separate payment for fittings, ball corps or check valves, if required, will be made; the compensation for such be deemed to be included in the Unit Price Bid for AIR RELIEF VALVE.

302.18 SERVICE LATERALS, CONNECTIONS AND PIPES.

A. General. The Contractor shall furnish and install all service laterals, copper pipes and appurtenances as shown on the plans.

Unless otherwise specified, the term "appurtenances" shall include all fittings, valves, ball corp, ball stops and any corrosion protection device including polyethylene wrap and plastic tubing, as required.

All galvanized laterals shall be replaced or reconnected with copper tubing as allowed in the approved material list unless otherwise noted on the plans.

Upon completion of excavation, the trench bottom shall be brought up to the required invert grade by backfilling and compacting the trench as specified under Section 302.03B - PREPARATION OF TRENCH BOTTOM.

All pipes and appurtenances shall be thoroughly inspected and tested prior to installation. The various types and sizes of service laterals and connections shall be installed at the locations shown on the plans in accordance with the Standard Details. Where possible, no joints will be permitted in the paved areas.

For Oahu only: The Contractor shall furnish and install an approved pressure reducing valve and appurtenances after the property valve in locations where working or static pressure is expected to exceed 80 pounds per square inch per Uniform Plumbing Code as required by the Manager and as noted on the plans. Contractor shall verify the existence of existing pressure reducing valve that needs to be replaced and shall coordinate with each property owner for the location of this valve. Contractor shall coordinate the pressure setting of each pressure reducing valve with the inspector assigned to the project. The Contractor shall install Type B meter box with each pressure reducing valve.

For Oahu only: The Contractor shall furnish and install ¾-inch PVC schedule 80 conduit with pull string under the meter boxes, whenever the distance between meter boxes (2 to 12 multiple meter boxes) is 4 feet or less (edge to edge). Conduit shall extend 2-inches within meter box, keep both ends exposed, plugged or taped to prevent soil intrusion, as required. For existing slab, saw cut trench and repair to match existing conditions.

B. Copper Service Laterals and Pipes. All Joints and fittings for copper pipe or copper service laterals and connections shall be of the soldered type, or other types as approved by the Manager.

In making solder joints, the following procedure shall be followed:

1. Copper tube shall be cut to the desired length with a tube cutter or fine hack saw (32-tooth blade). Burrs shall be removed with a file or scraper.

2. The outside of the end that fits into the solder cup of the fitting shall be cleaned with sandcloth or sandpaper. Dark spots shall be removed.

3. Before soldering, the Contractor shall ensure the copper pipe end section is circular in shape and not deformed. The Contractor shall use shaping/sizing tools on non-circular sections to provide a proper connection.

4. For 2-inch and larger pipe, sweat/dress ends of pipe with solder before inserting fittings.

5. The solder cup of the fittings shall be cleaned carefully with a wire brush, sandcloth or sandpaper. Dark spots shall be removed.

6. Only specially prepared no lead flux or approved equal shall be used. Flux shall be stirred thoroughly. A light, even coating of flux shall be brushed on to the outside of the tube and half way into the inside of the fitting. ACID OR ZINC CHLORIDE SHALL NOT BE USED.

7. The tube shall be inserted into the fitting as far as it will go and turned back and forth a few times to distribute the flux evenly. THE JOINTS SHALL NOT BE WIPED (TINNED) BEFORE INSERTING INTO PLACE.

8. The fitting shall be heated uniformly with a torch until the solder melts on contact with the heated fitting. The flame shall be removed from the fitting. Solder shall be fed to the joint at only one or two points and not around the full circumference of the tube. When a ring of solder appears around the tube at the fitting, the feeding of solder shall be stopped. The excess solder shall be wiped off with a cloth.

9. See Division 500 for the corrosion control requirements for copper services as applicable to the project.

For Oahu only: The Contractor shall encase the copper tubing at the tap with 8 mil polyethylene wrap (3 feet minimum long). The Contractor shall install plastic lateral (3 feet minimum of PE tubing) after the meters.

C. Plastic Service Laterals and Pipes. Installation shall be in accordance with the manufacturer's recommendation and shall comply with the applicable laws and regulations of the State of Hawaii and respective County. Minimum curving radius for tubing shall be as shown in Table 300-6:

Table 300-6 - Minimum Curving Radius					
Tube Size (Inches):	¾ ”	1”	1¼ ”	1½ ”	2”
Minimum Radius (Inches)	11	14	19	21	21

Conducting cable shall be installed over tubing for "toning" purposes as directed by the Manager. Conducting cable shall be solid one piece copper wire, No. 8 gauge (American or Brown and Sharpe Gage) or larger.

The conductive cable shall not be tied to or in contact with any other metallic fitting. The ends shall be terminated inside a test box and/or meter box or property valve box (see Division 500 as applicable to the project).

Fittings to be used with PE tubing shall be of the brass compression type or flare type as manufactured by Ford Meter Box Company or approved equal. Stainless steel insert stiffeners for PE tubing shall be used at all compression joints.

All pipes, laterals and appurtenances shall be hydrostatically tested separately or in conjunction with the water main. Test pressure for laterals shall be the same as specified for the water main.

Upon completion of the test, the trench shall be backfilled as specified under Section 302.03 - TRENCH BACKFILL.

D. Payment. Unless otherwise specified, the various items of payment covered under service laterals and connections and appurtenances shall be as follows: Payment for furnishing and installing various sizes of COPPER LATERALS and types of service connections, regardless of the lengths of the laterals or connections, will be made at the Unit Price Bid per each unit based on the actual number installed and tested.

The Unit Price Bids for the furnishing and installation of COPPER LATERALS, service connections and appurtenances shall be full compensation for all labor, materials, tools and equipment for all handling, hauling, unloading, placing, testing and all other incidentals necessary to complete the work.

No separate payment for the furnishing and installation of taps into mains, reconnections to existing services, transferal of meters, ball corps, ball stops, globe valves, meter splices, brass pipes, caps, PVC conduits, polyethylene wrap, plastic lateral for isolation and all other appurtenances will be made; the compensation for such work shall be deemed to be included in the Unit Price Bid for Service Laterals.

Payment for VALVE AND METER BOXES, inclusive of cast iron frames and covers will be made at the Unit Price Bid based on actual number of boxes installed.

Payment for excavation and backfill for service laterals will be made at the Unit Price Bid for TRENCH EXCAVATION (without Classification) including pipe cushion. Excavation quantity shall be used on a trench width of 12 inches and a depth of 24 inches (or 3 feet - 6 inches for State DOT right-of-ways or highways) unless otherwise directed by the Manager.

No separate payment for excavation, backfill and pipe cushion for copper service connections will be made; the compensation for such work shall be deemed to be included in the Unit Price Bid for copper service laterals, service connections and appurtenances.

Payment for DOUBLE HUB FITTINGS will be made at the Unit Price Bid as specified in the proposal. *(For Oahu only: Payment for tapped tees or bossed tees (with tap size specified) will be made at the Unit Price Bid per pound of DUCTILE IRON FITTINGS, based on the total weight of tapped tees or bossed tees installed and tested.)*

For plastic pipe, payment for TAPPED TEES shall be at the Unit Price Bid for each unit installed as specified in the proposal.

Payment for SERVICE SADDLES will be made at the Unit Price Bid per each unit, based on the actual number of SERVICE SADDLES installed in place complete.

Payment for the furnishing and installation of the various sizes of COPPER PIPES and appurtenances will be made at the Unit Price Bid per linear foot based on the actual linear feet of COPPER PIPES and appurtenances installed and tested.

Payment for PRESSURE REDUCING VALVES and appurtenances will be made at the Unit Price Bid based on actual number of PRESSURE REDUCING VALVES installed.

For Oahu only: Installation and payment for COPPER LATERAL WITH TYPE A, C, D, E AND MULTIPLE SERVICE CONNECTIONS shall be based on Division 400, Standard Detail L-21 New Lateral Installation Schematic Detail. Installation and payment for COPPER SERVICE LATERAL CONNECTION TO EXISTING OR NEW MAIN shall be based on Division 400, Standard Detail L-22 Lateral Connection Schematic Detail.

302.19 METER BOXES.

A. General. Meter boxes shall be installed for all services at the locations shown on the plans in accordance with the Standard Details.

For Kauai only: Type III, IV, and V meter boxes shall be built with sound concrete bricks set in full mortar beds according to standard masonry practice. A precast concrete box as shown on the Standard Details may be used in lieu of bricks. The cast iron frames and covers shall be set in full mortar beds and shall be flush and square with the sidewalk.

For Oahu only: Meter boxes shall be cast-in-place, pre-cast type or CMU wall type as shown on the Standard Details. Provide concrete slab around meter boxes in non-concrete sidewalks or dirt areas per Standard Details.

Where meter boxes are installed in sidewalk areas or with concrete slabs, the top of the box and the cast iron cover shall be flush and square with the sidewalk or slab. Meter boxes shall be 3 feet minimum clear from driveway flares or aprons, ramps and any structures. Meter boxes shall also be 12 inch minimum clear from right-of-way or property lines.

All meter boxes shall be installed to give a neat and finished appearance.

For Hawaii and Maui Only: Upon completion of the installation, each metal frame and cover shall be given a coat of high-grade asphaltum.

B. Payment. Unless otherwise specified, payment for the furnishing and installation of METER BOXES including cast iron frames and covers and concrete slab will be made at the Unit Price Bid per each unit, based on the actual number of METER BOXES installed.

The Unit Price Bid for the furnishing and installation of METER BOXES shall be full compensation for all labor, materials, tools and equipment for all handling, hauling, unloading, placing, bricks, concrete, cast iron frames and covers, painting, concrete slabs and all other incidentals necessary to complete the work.

Unless otherwise specified, no separate payment for excavation and backfill of METER BOXES will be made; the compensation for such work shall be deemed to be included in the Unit Price Bid for METER BOXES.

302.20 FIRE HYDRANTS.

A. General. Hydrants shall be installed at locations shown on the plans in accordance with the Standard Details.

All fire hydrants shall be installed with the 4½-inch nozzle faced no more than 15 degrees to the left or right of the line running from the center of the hydrant and perpendicular to the street curb. An adaptor may be required.

Hydrants shall be installed with the barrel vertical. After the hydrant has been checked for alignment and grade, the barrel shall be wedged tightly against the side of the trench to prevent any lateral movement. The wedges may be removed after the concrete anchor block poured at the bottom elbow has set.

The concrete anchor block shall be placed to at least 12 inches above the invert of the bottom elbow and shall not be disturbed for a minimum of seven days or as required by the Manager. For dry barrel fire hydrant, anchor block shall be placed so that the drain holes are not plugged.

Only standard tools shall be used in operating fire hydrants.

Fire hydrants installed in areas where there are no standard curbing shall be protected by the installation of DWS 2500 concrete curb guards or guard posts with concrete pads as shown on the Standard Details or as directed by the Manager.

Prior to final inspection, all exposed fire hydrants and parts to 4 inches below grade shall be cleared of all oil, grease, dirt or other foreign material, sanded and painted in accordance with DIVISION 200, Section 206.01 - GENERAL.

For Hawaii, Maui, and Kauai Only: Prior to final inspection, an EPA or FDA approved non-toxic grease shall be applied to the fire hydrant nozzle threads.

B. Payment. Payment for the furnishing and installation of FIRE HYDRANTS will be made at the Unit Price Bid per each hydrant, based on the actual number installed and tested.

The Unit Price Bid for the furnishing and installation of FIRE HYDRANTS shall be full compensation for all labor, materials, tools and equipment for all handling, hauling, unloading, placing, testing, painting and all other incidentals necessary to complete the work.

Unless otherwise specified, payment for excavation and backfill for fire hydrants will be made at the Unit Price Bid per cubic yard for TRENCH EXCAVATION (without Classification).

Payment for HYDRANT CONCRETE CURB GUARDS, GUARD POSTS or CONCRETE PADS per standard details will be made at the Unit Price Bid per each unit, based on the actual number installed. The unit price bid shall be full compensation for all labor, materials, tools and equipment for all concrete, excavation, backfill, formwork, bracing, curing and all other incidentals necessary to complete the work.

302.21 FIRE HYDRANT MARKERS.

A. General. Installation of hydrant markers shall conform to Section 629.03 Construction Requirements for Pavement Markings of the Hawaii Standard Specification for Road, Bridge and Public Works Construction, of the State of Hawaii, Department of Transportation, Highways Division. In addition, the following construction requirements for hydrant markers shall be adhered to:

1. Hydrant markers shall be applied to surfaces that have been thoroughly cleaned and are free of dirt, dust, curing compound, grease, oil, moisture, loose aggregates and other material which would adversely affect the bond of the adhesive.

2. In the installation of hydrant markers, the cleaning of Portland cement concrete and asphalt concrete surfaces shall be by blast cleaning. Clean, newly placed asphalt concrete need not be blast cleaned unless the surface contains an abnormal amount of asphalt or surface is contaminated with dirt grease, oil or any other material which would adversely affect bonding.

3. The location of hydrant markers shall be as shown in the Standard Details. Contractor shall check with the nearest County Fire Department Battalion Chief for verification of final location of markers.

B. Payment. Payment for HYDRANT MARKERS will be made at the Unit Price Bid based on the actual amount installed, or shall be included in the lump sum payment for the item involved, whichever is specified.

The Unit Price Bid for HYDRANT MARKERS shall be full compensation for all labor, materials, tools and equipment necessary for furnishing and installing HYDRANT MARKERS and all other incidentals required to complete the work.

302.22 CONCRETE BLOCKS, JACKETS, BEAMS, CURB GUARDS, SLAB FOR FIRE HYDRANTS AND METER BOXES, MANHOLE AND VALVE BOX COLLAR.

A. General. All pipelines and appurtenances subject to unbalanced thrusts shall be properly braced with plain or reinforced concrete reaction blocks. Unless otherwise specified, concrete for thrust and test blocks, jackets, reaction beams, curb guards and slabs for fire hydrants shall be DWS 2500, mixed, placed and cured as specified under Section 303.03 - CONCRETE WORK. Contractor shall notify the Department two days prior to concreting operations. No concrete shall be placed before the forms, reinforcing, and other details have been checked and specific authorization to proceed with concreting operations is given by the Manager. Concrete placed without such authorization will result in rejection of the concrete placed, and the Contractor shall bear all cost of removal and replacement.

Wherever required, thrust and test blocks shall be constructed of reinforced concrete. All jackets and thrust beams shall be of reinforced concrete and shall be constructed to the dimensions and details shown on the plans or the Standard Details.

Concrete thrust blocks, beams, test blocks, and jackets shall be allowed to cure for not less than seven (7) days prior to the application of pressure, or as approved by the Manager.

Concrete curb guards or slabs for fire hydrants shall be constructed to the dimensions shown on the Standard Details and at the location shown on the plans or as directed by the Manager.

All sections of water main that require reinforced concrete jackets shall be ductile iron pipe with ductile iron fittings, or concrete cylinder pipe with concrete cylinder fittings. All reinforced concrete jackets on existing utilities shall conform with the City, County, State or the utility owner's standards.

Due to varying soil conditions, whenever test or thrust blocks or beams for horizontal or horizontal-vertical bends are required, the dimensions and details of the blocks shall be furnished to the Contractor by the Engineer who prepared the plans. The design of the blocks shall be furnished after the Contractor has excavated the trench at the required location to verify the ground conditions. *(For Oahu only: For projects awarded by the Manager, the Department will furnish the design and details of the blocks. The Contractor shall allow sufficient time in their schedule to allow for design changes.)*

Where connections to existing mains are to be made, the Contractor shall construct whatever concrete blocks are required and furnish all structural struts or steel materials required to temporarily secure the fitting in place until the concrete is poured and has hardened.

B. Payment. Unless otherwise specified payment for concrete thrust and test blocks, jackets and thrust beams will be made at the Unit Price Bid per cubic yard for CONCRETE, based on the actual quantities placed, computed on the theoretical dimension limits set by the Manager.

For Oahu only: Payment for STANDARD REINFORCED CONCRETE JACKET FOR WATER MAINS inclusive of ductile iron or concrete cylinder pipe and fittings and reinforcing steel will be made at the Unit Price Bid per linear feet based on the actual linear feet of concrete jacketed pipe and fittings installed. Payment for reinforced concrete jacket inclusive of reinforcing steel for existing utilities will be made at the Unit Price Bid per linear feet of concrete jacket.

The Unit Price Bid for concrete shall be full compensation for all labor, materials, tools and equipment for all concrete, forms, tie wire and chairs, bracings, straps, structural struts, surface finishing, curing, mixing, hauling, furnishing and placing reinforcing steel and all other incidentals necessary to complete the work.

Unless otherwise specified, payment for excavation and backfill, exclusive of trench excavation, for concrete thrust and test blocks, jackets and thrust beams, will be made at the Unit Price Bid per cubic yard for TRENCH EXCAVATION (without Classification) based on the quantity excavated, computed on the theoretical dimension limits set by the Manager.

No separate payment for reinforcing steel, straps and structural struts will be made; the compensation for such work shall be deemed to be included in the Unit Price Bid for CONCRETE.

302.23 MANHOLES.

A. General. Manholes shall be constructed wherever specified on the plans or directed by the Manager. Manholes shall be constructed in accordance with the Standard Details or as shown on the plans.

As specified in DIVISION 100, Section 103.02 - MANHOLES AND VALVE BOXES, manholes in lieu of valve boxes shall be constructed unless otherwise specified. The manhole construction shall be waterproofed where water is encountered.

Upon completion, all manholes, including reconstructed or adjusted manholes, shall be thoroughly cleaned of all debris and the frames and covers painted with one coat of approved asphaltum paint.

B. Walls. Manhole walls shall be constructed of pre-cast or cast in place reinforced concrete, brick, or reinforced hollow block with reinforcing as required in accordance with standard masonry practice. The sizes and dimensions shall be as shown on the Standard Details.

A space of at least 2 inches shall be left between the wall and the upper half of the barrel of the pipe. This space shall be filled with asphalt or premolded asphaltic filler.

C. Top and Bottom Slabs. Manhole top and bottom slabs shall be of concrete with reinforcing steel and shall be constructed in accordance with the dimensions and notes shown on the Standard Details.

D. Reconstructing Existing Manholes. Existing manholes to be reconstructed to the required elevations shall be done in accordance with applicable provisions of the Water System Standards and as directed by the Manager. Materials to be used for the reconstruction of manholes shall be of the same quality as used for new manholes. The existing cast iron frame and cover shall be carefully removed, cleaned and painted with approved asphaltum paint prior to installation. The Contractor shall replace any frame and cover damaged during removal at no additional cost to the Department. Frames and covers to be adjusted shall match new finish grades.

Whenever required, the cone portion of the existing manhole shall be demolished and reconstructed to bring the frame and cover to the finish elevation.

Maintain interior height clearance (head room) per standard detail and clearance between top of valve and bottom of covers or roof slabs when adjusting manholes.

E. Payment.

1. Manhole Walls. Unless otherwise specified, payment for walls for the various types and sizes of manholes will be made at the Unit Price Bid per linear foot of depth based on the actual depth of wall installed, measured from the top of the floor slab to the bottom of the top slab for Type "A", “A-1”, “D” and “E” manholes and from the top of the floor slab to the bottom of the manhole frame for Types "B" and "C" manholes.

The Unit Price Bid for MANHOLE WALL shall be full compensation for all labor, materials, tools and equipment for all concrete, reinforcing steel, bricks, hollow blocks, mortar, forms, reinforced lintels, manhole rungs, asphalt, manhole frames and covers, eyebolts, painting, cleaning up, acceptable waterproofing type and all other incidentals necessary to complete the work.

2. Manhole Slabs. Payment for Manhole Slabs will be made at the Unit Price Bid per cubic yard for DWS 3500 CONCRETE, computed in accordance with the dimensions shown on the Standard Details.

The Unit Price Bid for MANHOLE SLABS shall be full compensation for all labor, materials, tools and equipment for all concrete, reinforcing steel, lift ports and appurtenances, cleaning up and all other incidentals necessary to complete the work.

3. Waterproofing. No separate payment for waterproofing or plaster coat will be made; the compensation for such work shall be deemed to be included in the Unit Price Bid for MANHOLE.

4. Adjusting Manholes. Payment for adjusting the various types of existing manholes to the required grade, when adjustment depths exceed six inches, will be made at the Unit Price Bid per linear foot depth of wall for RECONSTRUCTED MANHOLES. The Unit Price Bid shall be full compensation for all labor, materials, tools and equipment for all bricks, mortar, concrete, reinforcing steel, forms, excavation and backfill, cleaning up, painting, and all other incidentals necessary to complete the work.

Payment for adjusting the various types of existing manholes to the required grade when adjustment depths are less than six inches, will be made at the Unit Price Bid per each unit for ADJUSTING MANHOLES. The Unit Price Bid shall be full compensation for all labor, materials, tools and equipment for all excavation and backfill, bricks, mortar, cleaning and painting frames and covers and all other incidentals necessary to complete the work.

302.24 VALVE BOXES.

A. General. Valve boxes for gate valves, air relief valves, butterfly valves and cleanouts shall be installed in accordance with the Standard Details. Valve boxes shall be installed 3 feet minimum clear from gutter, curbs, utilities and any structures.

The standpipe shall be set plumb and centered over the valve stem. Backfill around the valve and standpipe shall be made by hand to 8 inches below the surface of the ground and compacted. Compaction of backfill shall be done with approved pneumatic tampers.

The cast iron frame and cover shall be set firmly to grade. A 4" thick concrete slab shall be poured to secure the frame.

All cast iron covers shall be close fitting to avoid rattling due to the passing traffic. All defective frames and covers shall be replaced to the satisfaction of the Manager.

Upon completion of installation, valve box frames and covers shall be cleaned and painted with one coat of approved asphaltum paint.

Existing valve boxes to be reconstructed to the required elevation shall be done in accordance with the applicable provisions of the Water System Standards. The existing standpipe shall be replaced with one having the correct length to bring the valve box to the required elevation. The existing standpipe may be reused if so approved by the Manager.

B. Payment. Payment for the furnishing and installation of VALVE BOXES will be made at the Unit Price Bid per each unit, based on the actual number installed and accepted.

The Unit Price Bid for the furnishing and installation of VALVE BOXES shall be full compensation for all labor, materials, tools and equipment for all excavation and backfill, cast iron frames and covers, 8-inch pipe collar, concrete anchoring pad, brick leveling course, pipe cushion, painting, cleaning up and all other incidentals necessary to complete the work.

Payments for ADJUSTING EXISTING VALVE BOXES to the required grade will be made at the Unit Price Bid per each unit for adjusting valve boxes, based on the actual number adjusted. The Unit Price Bid shall be full compensation for all labor, materials, tools and equipment for all excavation and backfill; concrete; pipe cushion; brick leveling course; removing, cleaning, painting and reinstalling cast iron frames and covers; new pipe collar if required and all other incidentals necessary to complete the work.

The number of valve boxes constructed with salvaged frames and covers will be paid for at the Unit Price Bid per each unit for "VALVE BOXES, REINSTALLING SALVAGED FRAMES AND COVERS". The Unit Price Bid shall be full compensation for all labor, materials, tools and equipment for removing, cleaning, painting and reinstalling frames and covers; excavation and backfill; furnishing and installing pipe collars; brick leveling course; concrete anchoring pad; pipe cushion and all other incidentals necessary to complete the work.

No separate payment for backfilling around valve boxes with black sand, sand or coral chips and for temporary backfill and additional excavation to expose the risers after chlorination will be made; the compensation for such work shall be deemed to be included in the Unit Price Bid for installing valve boxes.

302.25 EXISTING WATER SYSTEM.

The Contractor's attention is called to the existing water system and appurtenances now serving the area to be improved. The system shall be maintained in service until such time as the new mains, service laterals and service connections are installed, tested, chlorinated, flushed and the existing services transferred to the new system.

The Contractor shall coordinate the securing of the existing water system with the Department prior to excavating behind or removing any existing thrust blocks, structural struts or reaction beams, or any fittings such as tees, plugs, caps, bends, offsets, and valves, or any other pipeline appurtenance. The Contractor shall be responsible for all associated damages resulting from failure to adequately secure the existing system.

The Contractor shall notify the Department of any damage to the existing water system. The Department will perform all necessary repairs and the cost shall be paid for by the Contractor.

After the new water system and appurtenances or portions thereof including service laterals, service connections and meter boxes have been installed, the Contractor will remove existing meters and reconnect them to the new system under the coordination and inspection of the inspector assigned to the project.

302.26 WATER SUPPLY.

Where water is available from the Department's system, the Contractor may apply for water service for construction purposes. The Contractor shall furnish and install all materials, including temporary pipe and fittings, pumping and storage facilities necessary to provide an adequate water supply for construction purposes. After the construction meter, the Contractor shall furnish and install an approved backflow prevention device.

Unless specified otherwise, the Department will charge for water used in the installing, backfilling, testing, flushing and chlorinating of water mains. The quantity of water used will be measured by meters furnished, installed and disconnected by the Department. The Contractor shall make all necessary arrangements with the Department for such installation and disconnection.

A cash deposit or rental charge equal to the Department's estimated cost will be required prior to the installation of the water service. Upon disconnection, the Department will compute the actual cost and will refund any balance of the deposit. Should the cost exceed the deposit, the Department will render an invoice for the additional amount which shall be paid for by the Contractor. The actual cost will include the installation and disconnection of meters and such other cost of replacements or repairs as may be required because of injury or damage to the Department's meters, hydrants or other property while being used on the Project.

Where water is not available from the Department's system, the Contractor shall furnish and install at the Contractor's expense all equipment and materials necessary to provide an adequate water supply for the Project.

302.27 PIPE CLEANING.

Pipe shall be thoroughly cleaned and flushed during or after installation prior to the hydrotesting work.

Unless otherwise specified, cleaning shall be by the use of "pigs" introduced into the pipeline and run completely through all installed pipelines excluding branch lines for fire hydrants and service laterals. Bare foam "pigs" shall be used to swab piping clean as each length of the pipeline is installed. Cleaning and "pigging" of the pipeline shall be considered incidental to the installation of the new pipeline.

For Kauai Only: "Pigs" shall consist of a cylindrical piece of polyurethane foam with a density of 1.25 to 1.45 pounds per cubic foot. For waterlines up to 8" in diameter, the diameter of the pig shall be 2" larger than the pipe to be cleaned and 18" long. For 12" diameter waterlines, the pig shall be 16" in diameter and 30" long. For 16" diameter waterlines, the pig shall be 20" in diameter and 36" long.

For Oahu Only: The type, density, size, diameter and length of the pig shall be submitted for review and approval by the Manager prior to pigging work. "Pig" shall be used per manufacturer's specifications. Prior to use, the "pig" shall be submerged in a chlorine solution of 1 oz. of 5% chlorine bleach in 5 gallons of water. Manual sweeping, hand cleaning or swabbing may be allowed in lieu of "pigging" as approved by the Manager.

For Maui Only: All mains 16-inch and larger shall be pigged and flushed prior to testing. Mains smaller than 16-inch may be flushed only at a velocity greater than 2.5 fps. When adequate water is not available for high volume flushing, the main shall be pigged.

302.28 PIPE PRESSURE TESTS.

A. General. All water mains and appurtenances including service laterals and service connections shall be subjected to a hydrostatic pressure test as shown on the plans by the Contractor in the presence of the Manager or the Manager's authorized representative.

A separate test shall be made on each section of the pipeline and its appurtenances wherever any section of the work can be segregated as a unit. If valves are available at each end of the section, the test shall be made between the valves. If valves are not available, a plug or cap shall be installed and properly braced to withstand the required test pressure. When a section of the work is ready for testing, the ball corp installed in accordance with the Standard Details, shall be connected by suitable piping to the test pump. A ball stop shall be installed between the tap and pump. A pressure gauge furnished by the Manager shall be installed between the ball stop and the tap.

The section of pipe to be tested shall be completely filled with water. Care shall be taken to insure that no air pockets exist. The ball stop shall be opened and the hydrostatic pressure raised to the required pressure called for on the plans. Where valves and appurtenances are included in the segment under test, the rated pressure of these materials shall not be exceeded.

The ball stop shall be shut and the gauge observed for 30 minutes.

For Kauai Only: All water mains and appurtenances including service laterals, fire hydrants and service connections shall be subjected to a 150 psi hydrostatic pressure test for either:

1. *One (1) hour with a drop in pressure of no more than three (3) psi. Pipe and joints may be backfilled.*

2. *Thirty (30) minutes with a drop in pressure of no more than ten (10) psi. All joints of the pipe must be exposed during test.*

For Maui Only: In lieu of the above pressure test, mains and appurtenances shall be subjected to hydrostatic testing in accordance with the latest AWWA C600, "Standards for Installation of Ductile Iron Water Mains and their Appurtenances", to a pressure of at least 1.5 times the working pressure. Unless otherwise stated in the construction documents, the pressure test and leakage test shall be performed at 225 pounds per square inch pressure.

The Manager may require tests to cover any section or any combination of sections, and may require additional tests to be made at any time.

All equipment and material necessary for tests shall be furnished and installed by the Contractor.

After all leaks have been stopped and the test completed, brass tapered threads plugs shall be furnished and installed by the Contractor in holes made for testing purposes.

For Hawaii Only: All pressure testing shall be performed just prior to the finish paving of the roadway.

B. Payment. No separate payment for the hydrostatic pressure test of pipes and appurtenances will be made; the compensation for such work shall be deemed to be included in the Unit Price Bids for the installation of the various sizes and types of pipes including appurtenances.

302.29 CHLORINATION OF WATER PIPELINE.

A. General. Upon completion of the installation of the water system and pressure testing, the Contractor shall flush and disinfect the water system.

Unless otherwise specified. The Contractor shall perform all work necessary for the disinfection of water pipelines under the supervision and coordination of the Manager or the Manager's authorized representative.

The Contractor shall install temporary risers adjacent to certain valves for disinfection purposes prior to the start to backfill. After the water mains have been certified by the Department or otherwise directed by the Manager, the Contractor shall remove the risers. The excavation necessary to expose these risers and the final backfill shall be performed by the Contractor.

The Contractor shall expose all service connections for chlorination. After completion of the chlorination and flushing, the Contractor shall backfill the connections.

B. Disinfection Procedure (for Hawaii and Kauai only). *The disinfection and sampling procedure shall be as follows:*

1. *Preliminary Flushing. Where conditions permit, mains shall be flushed with maximum available pressure and velocity. Adequacy of turnovers shall be determined by the absence of particles. During all flushing operations, the Manager or the Manager's authorized representative shall determine the rate of water use.*

2. *Chlorination. The Contractor shall submit to the Manager, for approval, a sketch showing locations of sampling points and a plan or schedule delineating the method or steps the Contractor proposes to use to accomplish the work. The following methods for chlorination may be used:*

   A. *Flush new system adequately with chlorinated water of at least 50 mg/l concentration.*

   B. *Retention of chlorinated water (50 mg/l) overnight.*

C. Expose interior surfaces of pipes with chlorinated water (300 mg/l) for three (3) hours.

3. Sampling. Unless otherwise directed, microbiological samples shall be taken in all cases after all chlorine has been flushed out, as evidenced by readings from a low range chlorine test kit. Sampling shall be done by the Contractor under the coordination of the inspector assigned to the project. Sampling bottles shall be furnished by a certified laboratory. Under no circumstances shall the sample bottles be rinsed out.

The Contractor shall collect two (2) water samples per sample point. The first sample shall be taken immediately after the main is flushed of chlorine and the second sample shall be taken 20 to 28 hours later.

4. Certification. The water samples shall be analyzed by a laboratory certified by the State Department of Health. The laboratory shall be certified to test for coliforms in potable drinking water.

The disinfection procedure shall be considered acceptable after the laboratory test results show the following for each water sample collected:

1. Total coliform counts equal to zero (0); and
2. Total bacteria count is less than 200 colonies per 100 mils.

If any water sample fails to meet the criteria noted above, the disinfection of mains shall be repeated. After the main is re-disinfected, new water samples shall be collected at all sample points.

The Contractor shall submit a certification that the water system has been disinfected according to these standards. The Department reserves the right to evaluate additional samples before certifying a main.

All costs associated with the microbiological testing shall be at the Contractor's expense.

C. Disinfection And Sampling Procedure (For Oahu only). *The disinfection and sampling procedure shall follow the steps below:*

Step 1 - Preliminary Flushing: Where conditions permit, mains shall be flushed with maximum available pressure and velocity. Adequacy of turnovers shall be determined by the absence of particles. During all flushing operations, the Manager or the Manager's authorized representative shall determine the rate of water use.

Step 2 - Chlorination: The Contractor shall submit to the Manager, for approval, a sketch showing locations of sampling points and a plan or schedule delineating the method or steps the Contractor proposes to use to accomplish the work. The following methods for chlorination shall be used:

a. *The following chlorination and water sample collection procedure shall apply to all water pipeline projects:*

   Step 1: Chlorinate main by filling with water and introducing chlorine in sufficient quantity to obtain a minimum chlorine concentration of 50 parts per million. Leave chlorinated water in main overnight.

   Step 2: Flush main with fresh water until all chlorine has been flushed out as evidenced by the N,N-diethyl-p-phenylenediamine (DPD) test, then collect a water sample while continuing to flush the main.

   Step 3: Repeat Steps 1 and 2. After collecting the second water sample, stop flushing and allow the water to stand in the main overnight.

   Step 4: Thoroughly flush the main with fresh water until all water that had been standing in the main overnight has been flushed out. Stop flushing and let the water stand in the main for one hour. Collect a water sample.

b. *The main is deemed acceptable and certified when (1) two consecutive water samples, collected 24 hours apart under Steps 1 and 2, show no total and no fecal coliform and less than 200 colony forming units (CFU) of total bacteria and (2) the sample of water held in the main for one hour, collected under Step 4, also shows no total and no fecal coliform and less than 200 CFU of total bacteria.*

c. *Chlorination, flushing, sampling and testing will be extended should unsatisfactory results be encountered. Any sample that shows positive coliform presence or total bacteria greater than 200 CFU is unsatisfactory.*

d. *Steps 1 and 2 may be repeated before collecting the one hour hold sample specified in Step 4. Repeating Steps 1 and 2 is recommended in the event samples show the presence of coliforms and/or increasing total bacterial results from one sample to the next.*

e. *Water samples that show the presence of atypical colonies, debris or results inconsistent with existing water are subject to reconfirmation. The Manager reserves the right to request and test additional water samples in the interest of safeguarding public health and safety at no additional cost to the Department.*

D. Disinfection Procedure (for Maui only). *Chlorination of water mains shall be in accordance with AWWA C651-"Standards For Disinfecting Water Mains."*

The disinfection procedure specified are for guidelines only and the Department does not guarantee certification after one application. Disinfection of mains shall be repeated until samples show absence of coliforms. The Department reserves the right to request and test additional water samples in the interest of safeguarding public health and safety at no additional cost to the Department. A certified bacteriological test result shall be provided within one week prior to placing the system in service.

E. Disposal of Chlorinated Water. The Contractor shall be responsible for the proper disposal of chlorinated water to safeguard public health and environment in accordance with applicable Department of Health and NPDES requirements.

F. Repetition of Procedure. Disinfection of mains shall be repeated until samples show absence of coliforms.

G. Procedural Guideline. The disinfection procedures hereinabove are guidelines only and the Department does not guarantee certification after one application.

H. Payment. Payment for the CHLORINATION AND FLUSHING of the water system will be made at the respective Lump Sum Price in the Bid. The Lump Sum Price shall represent full compensation for furnishing all materials and for all labor, tools, equipment and incidentals required for the chlorination and flushing of the water system inclusive of all incidental work. No additional payment will be made due to repeat operations. The Contractor shall provide and install at the Contractor's own expense all water supply equipment and materials, including all temporary pipes and fittings and all pumping facilities which are necessary for transporting water from the nearest available source to the project site. *(For Oahu only: Water for the first two chlorinations or flushings will be furnished by the Department at the nearest available source at no cost to the Contractor. In the event that more than two chlorinations or flushings are required, the Contractor shall be charged for the water used.)*

302.30 CONNECTIONS, RELOCATIONS & LOWERING OF WATER MAINS AND LATERALS.

A. General. Whenever connections to, relocations of or lowerings of existing mains and service laterals are required, the Contractor shall perform all work necessary for the installation of the water mains and appurtenances as shown on the plans, under the coordination of the Manager or the Manager's authorized representative.

The Contractor shall submit to the Manager, for approval, a detailed sketch of the connections, relocation, or lowering showing all pertinent fittings and data in relation to the existing main, as well as schedule delineating the method or steps the Contractor proposes to follow to accomplish the connection, relocation, or lowering. The Manager will schedule the connection only after the Contractor's detailed sketch and schedule are submitted and approved. The Contractor shall provide the labor, materials and equipment, whether shown on plans or not, necessary to complete the connection work within the allowable shutdown period as noted on plans or as determined by the Manager.

The Contractor shall verify in the field, prior to submitting the sketch and schedule for approval, the materials required for connection based on the schematic layout. Should additional materials (pipes, fittings, etc.) be required, the Contractor shall obtain written approval from the Department.

The Contractor shall notify the Manager at least five (5) working days prior to the scheduled connection, relocation or lowering. The duration for doing the work will be determined by the Manager in order that water consumers will be inconvenienced as little as possible.

For Oahu Only (unless otherwise specified on the plans): All 12-inch and smaller water main construction requiring shutdown connection shall be scheduled for normal working hours at six (6) hours maximum downtime where only residential areas will be affected. For business and commercial areas, shutdown connection shall be scheduled for after working hours at six (6) hours maximum downtime. For shutdown connection on mains larger than 12-inches, the Contractor shall meet with the Manager to review, discuss and approve the Contractor's connection detailed sketch, sequence and schedule. The Contractor shall provide sufficient time in the Contractor's schedule to attend one or more pre-connection meetings prior to the connection work. The Manager will determine the allowable shutdown period or duration for connections on mains larger than 12-inches.

The Contractor shall have at the site all necessary pipe and appurtenances, jointing materials and all other materials for the work and shall also have completed all the necessary excavation as directed by the Manager. At all connections to the existing main, like materials (except asbestos cement pipes) shall be used to replace the existing main. For connection to existing asbestos cement pipes, the Contractor shall remove the entire pipe length between joints and replace it with an approved pipe. Direct tap to existing asbestos cement pipes is not permitted.

For connections, the Contractor shall chlorinate the entire inside surface of each connecting pipe, fitting and material with disinfection solution of five ounces of sodium hypochlorite mixed with ten gallons of water.

The Contractor shall complete the connection to the existing main only after cleaning, disinfection and flushing of newly installed mains are accomplished. Any exceptions will be determined by the Manager.

The Contractor shall take precaution while working on existing Asbestos Cement Pipes and shall follow all applicable OSHA, State, and Federal Regulations in the handling and disposal of the removed sections of pipe. Disposal must be at an approved asbestos material disposal site.

Unless otherwise specified, all abandoned lines shall be cut and plugged with class DWS 2000 concrete. Payment for cutting and plugging shall not be made directly but shall be considered incidental to the various items of the Proposal. The Contractor shall verify the size and type of line to be plugged.

With the Manager's approval, the Contractor may rent from the Department any specialized tools or equipment, required for connections, which are carried only by the Department. Any rental of specialized tools or equipment shall include the Department's operator and other personnel deemed necessary by the Department.

The Contractor shall be responsible for any damages made to the existing water system during connections, relocations or lowerings. Any costs incurred by the Department to repair any damages to the existing water system shall be paid for by the Contractor.

B. Payment. Unless otherwise specified, payment for CONNECTIONS TO, RELOCATIONS OF, OR LOWERINGS OF EXISTING MAINS, which may include the furnishing and installing of pipes, fittings, fire hydrants, gate valves, tapping sleeves and valves, service saddles, hub clamps and other appurtenant materials, will be made at the respective Lump Sum Price in the Bid.

The Lump Sum Price shall represent full compensation for furnishing all materials and for all labor, tools, equipment and incidentals required for connections or relocations or lowerings of existing mains as shown on the plans and in accordance with these specifications and inclusive of all incidentals required to complete the work.

No separate payment for cutting, plugging and abandoning existing mains will be made; the compensation for such work shall be deemed to be included in the Lump Sum Bid for CONNECTIONS OR RELOCATIONS OR LOWERINGS OF EXISTING MAINS.

No separate payment for installation of by-pass lines including cutting, plugging and abandoning existing by-pass line will be made; the compensation for such work shall be deemed to be included in the Lump Sum Bid for CONNECTION TO EXISTING METER.

302.31 REMOVING OR DEMOLISHING, REINSTALLING OR RETURNING EXISTING PIPES AND APPURTENANCES.

A. General. Whenever it is required to remove and reinstall existing pipes and appurtenances, such pipes and appurtenances shall be cleaned and painted before being reinstalled.

During the removal and reinstallation of existing facilities, the Contractor shall take every precaution to insure continuity of water service including the installation of temporary water lines when necessary. Provisions for continuity of service shall be as approved by the Manager.

All existing pipes and appurtenances, including fire hydrants, valves and cast iron frames and covers, to be salvaged shall be cleaned and returned to the Department's storeyard as directed by the Manager *(For Oahu Only: Return to Kalihi BWS Corporation Yard)*. The Contractor shall notify the storeyard 24 hours prior to delivering the materials.

Unless otherwise directed by the Manager, existing pipe and appurtenances replaced by like facilities shall become the property of the Project and shall be removed by the Contractor.

All excavation and backfill shall be performed by the Contractor.

The Contractor shall construct valve boxes or manholes over all relocated valves.

All debris 6-inches and larger shall become the property of the Contractor and shall be expeditiously removed from the construction site. Demolish and backfill all reaction and test blocks at connection locations. Demolish and backfill all abandoned manholes, valve boxes and meter boxes. Backfill the demolition work area as specified for trench excavation.

B. Payment. No separate payment for the removal, cleaning, painting, returning and reinstalling of existing pipes and appurtenances including fire hydrants, gate valves and cast iron frames and covers will be made; the compensation for such items shall be deemed to be included in the Unit Price or Lump Sum Price Bid for the various items in the Bid.

For Oahu only: Payment for the removal, cleaning, painting, returning and reinstalling of existing pipes and appurtenances including fire hydrants, gate valves and manhole frames and covers shall not be made directly, but shall be considered incidental to the various items in the bid.

No separate payment for demolishing and backfilling existing reaction and test blocks and abandoned manholes, valve boxes and meter boxes will be made; the compensation for such work shall be deemed to be included in the Unit Price Bids for the various items in the Bid.

No separate payment for the costs incurred by the Contractor to insure continuity of water service including the installation of temporary water lines will be made; the compensation for such work shall be deemed to be included in the Unit Price or Lump Sum Price Bid for the various items in the Bid.

302.32 PIPE HANGERS, LATERAL BRACINGS AND INSERTS.

A. General. Pipe hangers, lateral bracings and inserts shall be installed at the locations shown on the plans. Hangers, bracings and inserts shall be constructed to the dimensions and notes shown on the plans.

B. Payment. No separate payment for furnishing and installing pipe hangers, including hanger rods, inserts, lateral bracings, painting and bolts and nuts will be made; the compensation for such work shall be deemed to be included in the Lump Sum Bid for DUCTILE IRON PIPE CROSSING AT BRIDGES.

302.33 PIPE SLEEVES THROUGH RETAINING WALLS.

A. General. Whenever rubble masonry walls or concrete retaining walls are constructed, the Contractor shall insert pipe sleeves (2-inch minimum diameter) through retaining walls at locations shown on the plans or as directed by the Manager to facilitate later installation of service connections.

B. Payment. No separate payment for the furnishing and installation of pipe sleeves through retaining walls to facilitate later installation of service connections will be made; the compensation for such work shall be deemed to be included in the Unit Price Bid for the installation of rubble masonry and concrete retaining walls or service connections.

302.34 CLEANOUTS AND RISERS.

A. General. Cleanouts and risers shall be furnished and installed at locations shown on the plans or as directed by the Manager to facilitate disinfection of the water mains and appurtenances.

Cleanouts and risers shall be of the materials specified installed in accordance with the Standard Details, unless otherwise shown on the plans or directed by the Manager.

The sizes of risers shall be the maximum size allowed for the size of the main unless otherwise directed by the Manager.

After the water mains have been certified for disinfection, all risers and temporary cleanouts shall be removed. The ball corp for the risers shall remain in place. Gate valves may be removed and capped as directed by the Manager.

B. Payment. Payment for PERMANENT CLEANOUTS AND RISERS will be made at the Unit Bid Price, based on the actual amount installed.

The Unit Price Bids for furnishing and installing cleanouts with risers shall be full compensation for all labor, materials, tools and equipment for all handling, hauling, unloading, placing, jointing, bracing and blocking and other incidentals necessary to complete the work.

No separate payment for the furnishing and installation of caps, plugs, nipples, elbows, ball stops or gate valves will be made; the compensation for such work shall be deemed to be included in the Unit Price Bid for cleanouts and risers.

Payment for the concrete block will be as specified under the Unit Price Bid for concrete.

No separate payment for the furnishing, installing and removing of temporary cleanouts and risers will be made; the compensation for such work shall be deemed to be included in the Unit Price Bids for the various items in the Bid.

For Oahu only: No separate payment for the furnishing, installing and removing of temporary caps or plugs, cleanouts, risers and concrete blocks for disinfection and pressure testing work will be made; the compensation for such work shall be deemed to be included in the Lump Sum Bid for water mains connection.

302.35 VALVE MARKERS.

A. General. Valve markers for establishing the location of valves shall be installed at the locations shown on the plans or as directed by the Manager. Markers shall conform with the dimensions and notes shown on the Standard Details.

B. Payment. Payment for the furnishing and installation of VALVE MARKERS will be made at the Unit Price Bid per each marker based on the actual number installed and accepted. The Unit Price Bid shall be full compensation for all labor, materials, tools and equipment for all excavation, backfill, concrete, painting and all other incidental materials and work necessary to complete the work.

302.36 SLOW CURING ASPHALT (SC-4) PAVEMENT (COLD MIX).

A. General. Upon completion of the backfill and proper compaction, the Contractor, if required by the Manager, shall place a layer of Slow Curing Asphalt (SC-4) pavement two-inch thick over the excavated area of the trench within the paved street areas, driveways and sidewalks.

Prior to placing the SC-4, the trench shall be backfilled to the proper grade and compacted by rolling or by other means approved by the Manager. All depressions shall be brought to grade and rolling continued until a uniform surface of approximately one inch below the existing pavement shall be obtained along the entire width and length of the trench.

The SC-4 shall then be placed and rolled to provide a smooth surface with no more than 1/4 inch variation in 10 feet of the paving.

The Contractor shall maintain the trench in proper shape at all times, eliminating all low spots and bumps. The Contractor shall provide for the continuous maintenance of the SC-4 paving. Low spots and bumps, settlement and damages caused by traffic and inclement weather shall be immediately repaired. The Manager shall have the authority to suspend the project until the trench is constructed, maintained and repaired per standards.

B. Payment. Unless otherwise specified, payment for furnishing and placing SLOW CURING ASPHALT (SC-4) PAVEMENT will be made at the Unit Price Bid per square yard based on the area paved, measured on the basis of the width of trenches specified for excavation in Table 300-1 plus one (1) foot and the length of trench paved. The Unit Price Bid shall be full compensation for all labor, materials, tools and equipment for all handling, hauling, placing, rolling, maintaining the proper grade and all other incidentals necessary to complete the work. Payment shall be made only for the initial layer of SC-4. No additional payment shall be made for the maintenance and repair of the temporary trench paving.

302.37 RESTORING PAVEMENTS, DRIVEWAYS, SIDEWALKS, CURBS, GUTTERS, FENCES, WALLS AND MISCELLANEOUS.

A. General. After the backfill has been completed and settled, the Contractor shall replace all pavements, driveways, sidewalks, curbs, gutters, fences and walls which have been disturbed or removed in connection with the work in accordance with the "Standard Specifications for Public Works Construction", the applicable County Ordinance and all amendments, and Hawaii Revised Statutes as amended, relating to State and Federal Aid Highways and all applicable OSHA requirements.

The Contractor shall make all necessary arrangements with the City or County and the State Highway Department for the restoration and payment of the above-mentioned items.

Restoration of pavement shall be in accordance with the details shown on the plans and done with equivalent to or better materials.

It is understood that additional replacement of pavements, driveways, sidewalks, curbs, gutters, fences and walls as may be required due to shoring or bracing, cave-ins, settlement or breakage outside of the authorized measurement for restoring the above-mentioned items shall be the Contractor's responsibility.

Where water main crosses an existing railroad track, reconstruction of railroad track and bedding shall be equal to or better than the existing condition as detailed on the construction plans.

When water main is to be laid on steep unimproved slope, cement rubble masonry pavement shall be installed with concrete keys and weepholes as detailed on the construction plans.

Where fire hydrants and meter boxes are to be installed on a steep unimproved slope, a retaining wall shall be installed as detailed on the construction plans or standard details.

B. Subbase and Base Course. For work within State highways, the Contractor shall perform all applicable work in accordance with all applicable sections of the "STANDARD SPECIFICATIONS FOR ROAD AND BRIDGE CONSTRUCTION," and the latest specifications for "INSTALLATION OF MISCELLANEOUS IMPROVEMENTS WITHIN STATE HIGHWAYS".

For work within City and County streets, the Contractor shall perform all applicable work in accordance with all applicable sections of the "STANDARD SPECIFICATIONS FOR PUBLIC WORKS CONSTRUCTION", of the Department of Public Works of the City of County of Honolulu and the latest requirements of the City Department of Planning and Permitting.

C. Payment. Unless otherwise specified, payment for RESTORING PAVEMENTS, DRIVEWAYS, SIDEWALKS, CURBS, GUTTERS, FENCES and WALLS and new CEMENT RUBBLE MASONRY PAVEMENT will be made at the respective Unit Price Bids based on the quantities replaced. The Unit Price Bids shall be full compensation for all labor, materials, tools, and equipment for all handling, removing, placing, maintaining and all other incidental materials and work necessary to complete the restoration.

For Maui only: Except otherwise provided for in the proposal, all restoration work shall be incidental to the project and no separate payment shall be made.

Unless otherwise specified, payment for furnishing and placing ASPHALT CONCRETE PAVEMENT or REINFORCED CONCRETE PAVEMENT will be made at the respective Unit Price Bid per square yard based on the area paved, measured on the basis of the width of trenches specified for excavation in Table 300-1 plus one (1) foot and the length of trench paved. The Unit Price Bid shall be full compensation for all labor, materials, tools and equipment for all handling, hauling, placing, finishing, maintaining the proper grade and all other incidentals necessary to complete the work.

No separate payment for the furnishing and installing of subbase and/or base courses, concrete, reinforcing steel and appurtenances will be made; the compensation for such work shall be deemed to be included in the Unit Price Bid for ASPHALT CONCRETE and/or REINFORCED CONCRETE PAVEMENT.

No separate payment for asphalt treated base course or asphalt concrete base course and subbase course for repaving trenches where reinforced concrete pavement is encountered under asphaltic concrete pavement shall be made; the compensation for such work shall be deemed to be included in the Unit Price Bid for ASPHALT CONCRETE PAVEMENT.

Payment for restoration for concrete driveways, sidewalks, curbs and gutters inclusive of reinforcing steel, wire mesh and all other incidental materials and work will be made at the Unit Price Bid per cubic yard of DWS 2500 CONCRETE based on the actual quantities installed.

Payment for restoration of RAILROAD TRACKS will be made at the Lump Sum Bid.

Payment for the installation of CMU RETAINING WALL for meter boxes and fire hydrants will be made at the Unit Price Bid per linear foot based on the actual linear foot of retaining wall installed.

302.38 CORROSION PROTECTION.

A. General. Corrosion protection shall be applied to all pipes, valves and fittings wherever shown on the plans or directed by the Manager.

Types of material and methods of application shall be as shown on the plans, specified in the Special Provisions or as approved by the Manager.

See Division 500 for the required corrosion control protection and testing of these items as applicable to the project. All corrosion control items must be tested before acceptance of the pipeline. Test results shall be submitted to the Manager for approval.

B. Payment. Unless otherwise specified, payment for the furnishing and application or installation of CORROSION PROTECTION TO PIPES, VALVES AND FITTINGS will be made at the Unit Price Bid per linear foot based on the actual linear foot of pipes, including fittings and valves, covered with corrosion protection. The Unit Price Bid shall be full compensation for all labor, materials, tools and equipment for all handling, application, installation and other incidentals necessary to complete the work.

302.39 CONFINED SPACES.

The Contractor shall comply with the requirements for the Occupational Safety and Health Administration 29 CFR Parts 1910.146, Permit-Required Confined Spaces for General Industry and Hawaii Occupational Safety and Health (HIOSH) Confined Space Standard #12-104-1.

SECTION 303 - STRUCTURES

303.01 GENERAL.

All construction of structures, facilities and items other than those covered under Section 302 - WATER MAINS AND APPURTENANCES shall be in accordance with this section of the Water System Standards.

303.02 SITEWORK.

A. Description. This item of work shall include the furnishing of all labor, materials, tools, equipment and incidentals required for and incidental to earthwork required for the project construction, including but not limited to the following:

1. Removal of all obstructions encountered below grade.

2. Clearing and grubbing.

3. Excavation, filling and backfilling, fill compaction and grading.

4. Removal and disposal of materials unsuitable for or in excess of those required for fill, backfill and grading.

5. Importing of suitable fill material.

Additional requirements for Concrete Reservoirs are shown on Section 303.06 - REINFORCED CONCRETE RESERVOIRS.

B. Clearing and Grubbing. All trees, bushes, stumps and other objectionable materials in the area to be excavated for the structure, access road and pipeline trenches shall be cleared and removed. No debris shall remain on or adjacent to the property of the Department. Trees and bushes designated on the plans or by the Manager to remain shall be preserved and protected from damage.

Unless otherwise specified, clearing and grubbing shall be considered incidental and cost thereof shall be included in the cost of excavation.

All trees and branches cleaned from the site may be chipped and shredded for use in landscaping if allowed as an option to hauling. All chipping and shredding shall be considered incidental and cost thereof shall be included in the cost of excavation.

C. Structure and Site Excavation (without Classification). Excavation shall consist of all excavation to the depth and lines as shown on the plans for foundation of the structure and pipe jackets.

1. Reservoir. Excavation for reservoirs shall conform to the following:

a. Limit of Excavation. Excavation and shoring shall be kept within two feet of the outside vertical face of foundation.

b. Excavation shall be carried to the line and grades as shown on the plans or to solid bearing where necessary as directed by the Manager.

Bottom of excavations shall be compacted to 95% of ASTM D1557 density before pouring any concrete.

Side slopes in cut areas unless otherwise indicated on the plans or directed by the Manager shall be one and one-half to one (1-1/2:1). All side slopes shall be finished true to the line established by the Manager using hand trimming methods if necessary.

c. Excavation Below Grade. Any excavation below the grade established on the plans for the foundation of the reservoir, unless authorized by the Manager, shall be replaced with DWS 2000 concrete (1:3:5 mix) as the Manager may direct. All costs shall be assumed by the Contractor.

d. Test Holes. The Contractor shall drill test holes (7/8-inch minimum in diameter) with pneumatic drills as ordered by the Manager to investigate for cavities under wall at approximately 20 feet on center and at each column footing. Unless cavities are encountered, depth of holes shall be four feet below finished excavation. Where cavities are encountered, the drill holes shall be extended as directed by the Manager. All cavities shall be filled with DWS 2000 concrete to grade established on the plans. Test holes shall be considered incidental to reservoir excavation.

2. Other Structures. Excavation for structures shall not be carried below the elevations and beyond the dimensions shown. Any such over-excavation shall be filled with DWS 2000 concrete or compacted structural fill as directed by the Manager at no cost to the Department. Bottom of footing trenches shall be compacted before pouring any concrete.

3. Blasting. All explosives shall be used in compliance with local laws and ordinances.

Excessive blasting for "overshooting" will not be permitted. In the case of reservoir foundation, any "overshot" area, shattered or loosened material outside of the authorized cross section, shall be removed and backfilled with DWS 2000 concrete. All costs shall be assumed by the Contractor.

4. Drainage. Drainage shall be provided and shall consist of the following:

a. Remove water during the course of the work by the use of pumps, drains and other approved methods.

b. Prevent surface water from running into construction areas and provide temporary dams, curbs and ditches as may be required.

c. It shall be deemed essential to the performance of the work of this section that during the construction period the rough grading and excavation for utilities, lines, etc., be performed in a manner to drain surface and drainage water away from structure and critical areas. Where deep trenches are required to be left open over weekends, or other shutdown periods, suitable drainage facilities shall be provided to prevent the excess water from collecting in the structure and critical areas.

d. Provide surface drainage of areas in and adjacent to the structure at all times by control of the work to prevent water from running into or collecting at the structure. Should water accumulate, it shall be removed, and any resulting additional work shall be performed to remedy the situation at the Contractor's expense.

D. Fill, Backfill, Finishing and Grading.

1. Structural Fill. Structural fill shall be nonexpansive, granular, fairly well graded, 1½-inch maximum size with less than 10% passing No. 200 sieve. Structural fill shall be placed as shown on the plans and under concrete slab walkways and A.C. driveway.

2. Cushion Fill. Cushion fill shall be crushed rock well graded from ¾-inch to ¼-inch thickness as indicated on the plans.

3. Yard Subgrade Fill. Yard subgrade fill shall have a Plasticity Index less than 20, expansion less than 3% (CBR method), 3-inch maximum size and be free of deleterious substances. Yard subgrade fill shall be installed at all open yard areas and topped by yard finishing materials to the indicated finish grades.

4. Yard Finishing Material. Yard finishing material at areas to receive landscaping shall be topsoil consisting of a fertile, friable soil of loamy character and shall contain a normal quantity of organic matter. It shall be obtained from well-drained arable land and shall be free from subsoil, refuse, roots, heavy or stiff clay, stones larger than 1-inch in size, coarse sand, noxious seeds, sticks, brush, litter, and other deleterious substances. Topsoil shall be free from toxic quantities of either acids or alkaline elements and shall be capable of sustaining healthy plant life.

Topsoil layer shall be minimum 6 inches deep from the finish grades indicated, or to the top of roadway header, raked smooth and even, and left in a condition suitable for landscaping.

5. Gravel Fill Ground Cover. Gravel fill ground cover shall be Grade A, well-graded from ½-inch to 1½-inch.

6. Compaction. Compaction shall conform to the following:

a. Structural Fill. Structural fill may be end dumped below the water level and rammed into place. When the fill is above the water table, the fill shall be proofrolled with heavy earth moving equipment. Soft spots shall be removed and replaced. Above the water level, the fill shall be compacted in 6-inch layers to 95% of ASTM D1557 density.

b. Cushion Fill. Cushion fill shall be compacted 95% of ASTM D1557 density.

c. Yard Subgrade Fill. Yard subgrade fill shall be compacted in 6-inch layers to 90% ASTM D1557 density.

d. Yard Finishing Material. Yard finishing material shall be lightly rolled to a smooth, even plane with suitable compaction as approved by the Manager, ready to receive planting.

e. Gravel Fill Ground Cover. Gravel fill ground cover shall not be compacted.

f. Backfill. Backfill shall be to the lines and grades as shown on the plans and shall be done after the formwork has been removed and work has been approved by the Manager. Backfilling shall be done in 6-inch layers and compacted to 90% ASTM D1557 density.

   Prior to placing fill and backfill, all wood, trash and debris shall be removed.

g. Grading. Grading shall be to the lines and grades as shown on the plans.

E. Grading Control. All grading, including sub-grading and finished grading of areas covered by this section, shall be controlled by such intermediate grade stakes and lines as may be necessary to insure slopes, lines and levels required by finished grade elevations indicated on the plans. Compacted subgrade shall parallel and conform with control planes established by grade stakes and lines.

F. Surplus Excavated Material. All surplus excavated material shall become the property of the Contractor unless otherwise specified, and shall be removed from the site.

G. Clean Up. Upon completion of the work, the entire project site shall be cleared of excavation materials and debris, tools and equipment and such materials, debris, etc., shall be removed from the premises.

H. Additional Requirements.

1. Visit the site and examine and note conditions as to the character and extent of the work involved.

2. Loads of material moving to or from the site shall be trimmed to prevent droppings along the street.

3. Utility and drainage lines shall be marked for position and adequately protected. Active lines encountered during excavation shall be shut off at the service main after permission to do so has been obtained from the Manager and/or the utility company involved.

4. The Contractor shall be responsible for the protection and maintenance of existing service lines throughout the project site.

5. Arrangements for water shall be the responsibility of the Contractor.

6. Required soil for fill, backfill, trench filling, etc., shall be approved by the Manager and shall be imported as required. No separate payment for fill, backfill, finishing and grading will be made; the compensation for such work shall be deemed to be included in the Unit Price Bid or Lump Sum Bid, whichever is specified, for the item of which it is a part.

7. Reference points, such as bench marks, stakes, etc., shall be carefully maintained but if disturbed or destroyed shall be replaced as directed without additional cost to the Department.

8. Signs, lights and barricades shall be installed at danger points to guard against accidents.

9. All work shall conform to all applicable ordinances and regulations.

I. Payment. Payment for STRUCTURE AND SITE EXCAVATION (without Classification) will be made at the Unit Price Bid or the Lump Sum Bid whichever is specified. Payment shall represent full compensation for furnishing all materials, labor, tools, equipment and incidentals required to complete the various excavation and appurtenant work at the project site.

Quantity to be paid for under Unit Price Bid shall be the total cubic yards excavated computed on the basis of in place measurement in accordance with the following provisions:

1. Upper limit shall be the ground surface as shown on the contour map or the actual ground as it existed prior to the start of excavation unless otherwise specified.

2. Lower limit shall be the elevations designated on the plans or directed by the Manager.

3. Lateral limit shall be 1 foot 6 inches outside the wall footing unless otherwise specified.

4. SITE EXCAVATION (without Classification) will be paid for at the Unit Price Bid. Payment shall represent full compensation for furnishing all materials, labor, tools, equipment and incidentals required to complete all site excavation and embankment as shown on the plans. Upper and lower limits shall be as follows:

   a. The upper limit for site excavation shall be the existing ground surface as indicated by the contour lines on the plans.

   b. The lower limit for site excavation shall be the bottom of concrete pads supporting piping and the transformer; the bottom of the cushion fill in building areas; the bottom of subbase course in paved areas; the bottom of gravel fill in gravel fill areas; and the finished grade in all other areas.

5. No separate payment for STRUCTURE EXCAVATION (without Classification) for building footings below the bottom of cushion fill will be made; the compensation for such work shall be deemed to be included in the Lump Sum Price Bid for construction of the control building.

6. Filling, backfilling, and placing of structural fill, cushion fill, yard fill, and any other materials whether on-site or imported, except for gravel fill, will not be paid for separately but shall be considered incidental to the various other contract items.

7. Gravel fill ground cover will be paid for at the contract unit price in the proposal. Payment area shall be the in-place area.

8. The Contractor shall be responsible for obtaining and paying for any permits required for clearing, grubbing, grading and stockpiling of surplus excavated materials.

9. No separate payment for TRENCH EXCAVATION (without Classification) within building lines will be made; the compensation for such work shall be deemed to be included in the Lump Sum Price Bid for construction of the control building.

10. Surfaces of areas to receive ground cover shall be finished smooth. Remove weeds, debris, and stones larger than 3 inches in size.

11. No separate payment for MOISTURE BARRIER FOR GRAVEL FILL will be made; the compensation for such work shall be deemed to be included in the Unit Price Bid for gravel fill.

303.03 CONCRETE WORK.

A. Description. This item of work shall include the furnishing of all labor, material, tools and equipment required for placing concrete to the lines, grades and details as shown on the plans and as specified in these Standards.

B. Materials. Concrete shall be composed of Portland cement, fine and coarse aggregates and water mixed as provided hereinafter.

1. Cement. All Portland cement shall conform to "Standard Specification for Portland Cement" (ASTM C150) for Type I cement.

The Contractor shall submit a certificate of a test with each lot of cement proposed for use on the project. The Manager may require additional test of the cement as required.

2. Mixing Water. Water used in mixing concrete shall be clean, salt-free, and potable.

3. Concrete Aggregates. Concrete aggregates shall conform with "Standard Specification for Concrete Aggregates" (ASTM C33) and as follows:

a. Coarse aggregate shall be a mixture of No. 3 coarse and No. 3 fine crushed, dense, close grain, blue lava rock unless otherwise specified. The specific gravity of rock shall not be less than 2.65. The gradation of No. 3 crushed rock shall conform to the requirements as shown in Table 300-7.

b. Fine aggregate shall be a combination of 40% sand and 60% No. 4 Fine by weight. No. 4 Fine shall be of like quality as No. 3.

   The gradation of No. 4 Fine shall conform to the following requirements as shown in Table 300-8.

   Sand shall be clean, free from sticks, dirt, organic matter or other deleterious substances.

Table 300-7 - TOTAL PERCENTAGE BY WEIGHTS, PASSING SIEVES WITH SQUARE OPENINGS		
Sieve	Size No. 5 No. 3 Course	Size No. 67 No. 3 Fine
1½"	100	--
1"	90 - 100	100
3/4"	20 - 55	90 - 100
1/2"	0 - 10	70-90
3/8"	0 - 5	20 - 55
No. 4	--	0 - 10
No. 8	--	0 - 5

Nominal Size Range: No. 3 Coarse - 1" - ½"
No. 3 Fine - 3/4" - #4

Table 300-8 - TOTAL PERCENTAGES BY WEIGHT, PASSING SIEVES WITH SQUARE OPENINGS	
Sieve	Percent
3/8”	100
No. 4	90 - 100
No. 8	65 - 90
No. 16	30 - 60
No. 50	10 - 30
No. 100	5 - 15
No. 200	0 - 10

4. Admixture. Admixtures for concrete mixes specified must be approved the Manager. Admixtures for concrete to be in contact with potable water shall be certified to be in compliance with NSF 61.

C. Proportioning Concrete Mix. The proportions of cement, aggregates and water for the various classes of concrete shall be established by laboratory tests to meet the requirements specified in Table 300-9. An approved testing laboratory shall make and test concrete specimens for compressive strength in accordance with the ASTM Standards.

The Contractor shall submit to the Manager the test reports for all classes of concrete 3000 psi and above to be used on the project. The report shall include the following:

1. Class of concrete.

2. Proportion of materials by weight - cement shall be as specified in Table 300-9.

3. Water cement ratio.

4. Slump.

5. Compressive strengths for 7, 14, 21 and 28 days based on the average of three specimens for each age.

No concrete work for the project shall be allowed until the test report is submitted to the Manager and the requirements of Table 300-9 are fulfilled.

All costs of tests to determine mix proportions shall be borne by the Contractor.

The Manager shall have the right to make check tests of concrete made with materials proposed for use in the work and to order such changes as may be required to obtain a workable mix meeting the requirements specified in Table 300-9.

Table 300-9 - CONCRETE CLASSES AND USES

Class of Concrete	Minimum 28-Day Compressive Strength (psi)	Minimum Sacks per Cu. Yd. of Concrete	Maximum Water, Gals per Sack of Concrete	Maximum Size of Aggregate (in.)	Slump Range (in.)	Location Required In Project
DWS4000	4,000	7.0	--	3/4	3 - 5	Reservoir Walls, columns, roof slab. Precast concrete members. Note: Coarse aggregate for reservoir wall shall be No. 3 Fine only.
DWS3500	3,500	6.0	--	1	3 - 5	Reservoir floor slab (including pipe jackets). Floor and roof slabs, walls, pump pads, piping pads, footings, beams, columns, stairways of all other structures, and manhole slabs.
DWS3000M	3,000	7.0*	--	--	3 - 5	First 4½-inch pour above construction joints of all reservoir walls. * (1/2 the amount of coarse aggregate used in DWS4000 mix)
DWS2500	2,500	--	7.0	1	2 - 4	Manhole slabs, catch basins, pipe jackets (except under reservoir floor slab), pipe reaction blocks, concrete roads, curbs, gutters, drainage ditches, sidewalks, head walls and plant boxes.
DWS2000	2,000	--	7.0	1	4 - 6	Mass fill concrete, electric and telephone duct lines, C.R.M. wall backing.

Notes:

1. For reinforced concrete pavement (Concrete Roads), slump shall be 2” before the addition of admixtures.

D. Prior Test Records. In the event the Contractor furnishes reliable test records of concrete made with materials from the same source (quarry) and of quality equal to such materials proposed for use in connection with the current work, all or part of the strength test specified hereinbefore may be waived by the Manager.

E. Workability of Concrete. The concrete shall be of such consistency and composition that it can be worked readily into the corners and angles of the forms and around the reinforcement without permitting the materials to segregate or free water to collect on the surface. Subject to the limiting requirements of Table 300-9, the Contractor shall adjust the proportions of cement and aggregates as may be necessary to produce a mixture which will be easily placeable at all times, due consideration being given to the methods of placing and compacting used on the work.

In general, the consistency of concrete mixtures shall be as follows:

1. The mortar clings to the coarse aggregates;

2. The concrete is not fluid as to segregate when transported to the place of deposit;

3. The concrete, when dropped directly from the discharge chute of the mixer, shall flatten out at the center of the pipe and not flow at the edges;

4. The mortar shall show no free water when removed from the mixture; and,

5. The upper layer of the set concrete shall show a cement film upon the surface but shall be free from laitance.

To determine the amount of water to be used, a technician shall sample the aggregate for moisture content and shall make the necessary adjustment of water required. Slump test shall be made from the first truckload of concrete at the concrete batching plant prior to any concrete leaving the plant. Water content shall then be adjusted if necessary to meet the slump requirement for all succeeding concrete mixes.

F. Changes in Proportions or Materials by Manager. If during the progress of the work, it is found impossible to secure concrete of the required workability with the materials being furnished by the Contractor, the Manager may order such changes in proportions as may be necessary to secure the desired properties, subject to the limiting requirements shown in Table 300-9.

Any changes so ordered shall be made at the Contractor's expense and no extra compensation will be allowed by reason of such changes.

G. Measurements of Materials. Concrete materials shall be measured by weighing, except as otherwise specifically authorized by the Manager. The apparatus provided for weighing the aggregates and cement shall be suitably designed and constructed for this purpose. Each size of aggregate and the cement shall be weighed separately. The accuracy of all weighing devices shall be such that successive quantities can be measured to within one percent of the desired amount. The mixing water shall be measured by weight or by approved metering device. The water measuring device shall be susceptible to control accurate to $\pm$ 0.5% of the capacity of the metering device. All measuring devices shall have been recently calibrated prior to the batching of concrete. The Manager may require a certificate of calibration from a responsible testing service other than the organization of the Contractor or subcontractor supplying concrete materials for the work. All measuring devices shall be subject to approval.

The Contractor shall at all times during concreting operations give free access to all parts of the batching plant to an inspector or other authorized representative of the Manager to inspect the quality and proportions of the materials in accordance with the Water System Standards.

H. Truck Mixing (Mixed-in-Transit Concrete). Unless otherwise authorized by the Manager, the mixing of concrete shall be done on a truck mixer of approved type which will insure a uniform distribution of the material throughout the mass. Mixed-in-transit concrete shall be in accordance with the "Standard Specifications for Ready-Mix Concrete" (ASTM C94).

The Contractor shall certify to the Manager prior to the beginning of concreting operations that sufficient truck mixing equipment has been made available to assure continuity in pouring operations.

I. Time of Hauling Ready-Mixed Concrete. Concrete transported in a truck mixer, agitator, or other transportation device shall be discharged at the work site within 1½ hours after water is added to the concrete materials.

J. Job Site Mixing. All mixers shall be of an approved truck type. The Contractor shall provide a loading machine and operate enough mixers to efficiently carry on the work and to avoid "cold joints" in the concrete work. The mixing shall be carefully done using only sufficient water to produce a mix plastic enough to run freely. All batches shall be proportioned at the central batching plant as specified elsewhere in these Standards and transported to the loading machine in trucks designed for the purpose. The batch loading machine shall be available for inspection by the Manager not less than 24 hours before concrete is poured.

A competent foreman from the concrete company shall be in constant attendance at the job site to insure the design qualities are met.

K. Retempering. The retempering of concrete which has partially hardened; that is, mixing with or without additional cement, aggregate or water will not be permitted.

L. Field Tests of Concrete. During the progress of construction, the Manager will have tests made to determine whether the concrete complies with the standards of quality as specified in these Standards.

1. Compressive Strength. Concrete for test specimen shall be taken at the mixer, the transporting vehicle, during discharge or as directed by the Manager.

Test specimens shall be made in accordance with "Standard Method of Making and Curing Concrete Test Specimens in the Field" (ASTM - C31).

Generally six (6) cylinders will be made for each class of concrete poured in any one day's operation. Three (3) cylinders shall be tested at age of seven (7) days and twenty-eight (28) days, respectively, in accordance with the "Standard Method of Test for Compressive Strength of Cylindrical Concrete Specimens" (ASTM - C39).

All costs involved in connection with the testing of the test specimens shall be borne by the Contractor. The Contractor shall furnish the concrete, testing materials, labor and storage facilities required for taking samples, handling and storing at the site of work.

2. Slump Test. Standard slump test shall be made periodically by the Manager during the placing of concrete in accordance with the "Standard Method of Test for Slump of Portland Cement Concrete" (ASTM-C143) to insure that the maximum slumps (for which the concrete is designed) shall not be exceeded.

For Kauai only: The Contractor shall perform the field tests for concrete and shall bear all costs for materials, labor and equipment required to perform the necessary tests.

M. Failure to Meet Compressive Strength Requirements. Should the average 7-day strength of test specimens made and tested in accordance with the provisions previously specified, fall below the anticipated strength to give the 28-day strength as specified in Table 300-9, the Manager shall have the right to reject the work and to require changes in proportions as specified elsewhere in these Standards to apply in the remainder of the work.

Furthermore, on those portions of the structures represented by the test specimens which failed, the Manager shall have the right to require additional curing over and above the curing periods specified hereinafter as may in the judgment of the Manager be necessary. Additional curing shall be done at the Contractor's expense and no claim for extra compensation shall be allowed. In no case, however, shall the Contractor be required to provide curing beyond a total of 28 days.

N. Damaged or Defective Concrete. The Contractor shall remove any concrete found cracked, damaged or otherwise defective, and shall cut out to solid concrete all pockets of stone containing voids (honeycomb). The Contractor shall submit their proposed detailed repair method for each type of problem area for Manager’s review and approval. No repair work shall be done prior to Manager’s approval.

All items of work required to repair defective concrete work shall be at the Contractor's expense.

O. Formwork

1. General. Forms shall be constructed of sound, new materials, free from defects and blemishes and shall conform to the shape, lines, grades and dimensions of the concrete as called for on the plans.

Exposed concrete surfaces, where plaster or gunite finish is not called for on the plans, shall be formed with new untreated Douglas Fir "PLYFORM", edge branded and sealed, grade marked "EXT-DFPA" or equal.

All forms shall be built mortar tight and of sufficient rigidity to prevent distortion due to the concrete and construction loads and forms shall be constructed and maintained so as to prevent warping and the opening of joints due to shrinkage of lumber. All forms shall be adequately braced to withstand the use of internal vibrators.

Forms shall be so designed that column forms may be removed without disturbing in any way the supports of the slab in order that defects in the column may be detected and remedied before any load is placed thereon.

Where indicated on the plans, suitable molding, bevels or chamfer strips shall be placed in the angles of forms to round or bevel the edges of the concrete.

All forms (except forms for concrete surfaces to be in contact with potable water) shall be coated with non-staining mineral oil before reinforcement is placed. All forms for concrete surfaces to be in contact with potable water shall be coated with non-staining vegetable based oil before reinforcement is placed.

All forms shall be wetted down unless otherwise authorized by the Manager prior to the start of concrete pouring operations.

All wall and column forms shall be provided with adequate cleanout and inspection openings at the base and other points necessary to facilitate cleaning and inspection before depositing concrete.

2. Form Ties. Form ties for walls shall be snap ties with ½-inch break-back. For reservoir and building basement walls below ground water level, ties shall be fabricated with 3/4-inch diameter rubber water stop.

Form ties for reservoir walls shall have tie metal set back from the wall face a minimum of one inch. Ties shall be "Waterseal Snap Ties" as manufactured by Superior Concrete Accessories, Inc., or approved equal. Ties shall be fabricated with a 3/4-inch diameter rubber waterstop secured to each strut such that a watertight joint between the washer and the strut is obtained.

Ties shall be free from surface oil or grease and placed so as to prevent contact with the reinforcing steel.

3. Form Removal. No forms or falsework of any kind shall be removed without the consent of the Manager.

In general, the forms of any portion of a structure shall not be removed until the concrete has hardened adequately to carry its own weight plus any superimposed loads.

Methods of removal likely to cause overstressing of the concrete are not allowed. Supports shall be removed in such a manner as to permit the concrete to uniformly and gradually take the load.

Forms shall not be removed until the minimum time as specified shall have elapsed after pouring concrete thereon:

Footings	3 days
Retaining walls and wing walls	7 days
Walls	7 days
Bottom forms of slabs, girders and beams 6 feet or less in span (add one day for each additional foot of span)	7 days
Sideforms of beams and girders	7 days
Columns (if girders are shored)	3 days
Reservoir flat slab roofs	21 days
Reservoir walls	14 days
Reservoir columns for flat slab roofs	7 days

P. Conveying, Placing and Handling.

No concrete shall be placed in any part of the structure before the forms and reinforcing steel have been checked and specific authorization given by the Manager to proceed with the concreting operations. Before the reservoir floor slab is poured, the surfaces of all concrete jackets and DWS 2000 concrete fill placed to bring excavation to grade, shall be mopped with asphalt. Asphalt shall comply with ASTM D312, Type IV.

Concrete shall be discharged from the mixer and conveyed to the place of final deposit as rapidly as practical by methods that will prevent segregation and loss of ingredients. Concrete shall be deposited within 15 minutes after leaving the mixer without the use of chutes. There shall be no vertical drop greater than five feet except where "elephant trunk" or suitable equipment is provided to prevent segregation of ingredients and where specifically authorized by the Manager.

Concrete shall be deposited at its final position in approximately horizontal layers not to exceed 18 inches unless otherwise specified to avoid flowing along the forms. Placement shall be carried on at such a rate that all concrete surface not yet to grade shall not have reached their initial set before additional concrete is placed thereon.

The rate at which concrete is being deposited in the forms shall depend on the size of the members and the amount of reinforcing steel and shall be regulated by the ease or the difficulty, as the case may be, with which concrete can be placed. It shall be regulated in such a way that all requirements for a satisfactory product as enumerated in the Water System Standards will be fulfilled.

Concrete shall be placed and compacted with mechanical vibrators, supplemented by spading and tamping. In no case shall vibrators be used to flow concrete inside the forms.

Mechanical vibrators shall maintain a speed of not less than 9000 impulses per minute when in operation, submerged in concrete and shall be of sufficient capacity to properly consolidate the concrete in the forms. The duration of vibration shall be such that satisfactory compaction is obtained without producing objectionable separation. Inserting the vibrator into concrete which has been placed and begun to set shall be avoided. An extra vibrator shall be furnished as a standby for each concrete pour.

The Contractor shall provide not less than two complete facilities for hoisting or pumping concrete and also other extra or standby equipment necessary for uninterrupted concreting operation. In the case of ready-mix concrete, sufficient trucks shall be used to deliver concrete at a rate to avoid "cold joints".

Just before placing concrete, trenches and opening shall be clean of all debris and free from standing water and mud. Forms shall be clean, free from debris and other extraneous matter. Un-oiled wood forms, earth forms and sand cushion shall be thoroughly dampened.

Beams and girders shall not be poured on the same day as the supporting columns unless specified otherwise.

Before depositing new concrete on or against concrete which has set, the forms shall be retightened and the surface of the set concrete shall be thoroughly roughened and cleaned of all foreign matter and laitance. The surface shall be saturated with water and slushed with a coat of cement grout. Fresh concrete shall then be placed before the grout has obtained its initial set.

For “cold joints”, the set concrete shall be thoroughly roughened and cleaned of all foreign matter and laitance, and the formwork shall be thoroughly cleaned of concrete spatters. If directed by the Manager, the formwork in the affected area shall first be “stripped” from the set concrete. Before depositing new concrete on or against concrete which has set, the forms shall be retightened and an epoxy bonding compound, approved by the Manager, shall be applied to the surface in accordance with the manufacturer’s instructions. The costs for the above remedial work shall be borne by the Contractor.

DWS 3000M concrete shall be poured for the bottom 4½ inches of the reservoir wall above the sliding joints and horizontal construction joints.

Q. Construction and Expansion Joints. Construction and expansion joints shall conform with the details as shown on the plans or as specified elsewhere in these Standards.

1. Construction Joint Surface shall be thoroughly clean and damp before depositing new concrete and shall be slushed with neat cement grout. The first layer of bonding concrete shall be deposited before the grout has set.

2. Expansion Joint Filler Strip. Premolded expansion joint filler strip shall meet the requirements of the "Standard Specification for Sponge and Expanded Cellular Rubber Products" (ASTM D-1056 SCE 43) and all subsequent amendments. Expansion joint filler shall be Rubatex R431N Closed Cell Neoprene, or approved equal.

3. Roof Sliding Joint. Roof sliding joint strip shall meet requirements of "Standard Specification for Sponge and Expanded Cellular Rubber Products" (ASTM D-1056 SCE 43) and all subsequent amendments. Sliding joint strip shall be Rubatex R431N or approved equal. Sliding joint shall be as detailed on the plans.

4. Waterstops. Waterstops where required for construction and expansion joints shall be of neoprene or rubber as shown on the plans and specified in Section 303.06 - REINFORCED CONCRETE RESERVOIR.

R. Protecting and Curing. Fresh concrete shall be adequately protected from injurious action by the sun, heavy rains and mechanical injury and shall not be allowed to dry out from the time it is placed until the expiration of the minimum curing periods specified in these Standards.

Table 300-10 - MINIMUM CURING PERIODS FOR CONCRETE

	Minimum Curing Periods (Days)	
	General Construction	Reservoirs[b]
Perimeter Footing	7	14
Floor and Roof Slabs	14	14[a]
Walls, Beams, Columns	7	14
Retaining Walls	7	-
Miscellaneous Structures	7	-

a - For floor slabs, refer to Section 303.12 - PROTECTION OF RESERVOIR for additional requirements.

b - Forms to be left in place and the unformed surfaces kept continuously wet.

The following methods or combination thereof shall be used for concrete curing:

1. The surfaces of slabs to be cured by ponding.

2. Covering with burlap or cotton mats and kept continuously wet.

3. Covering with one-inch layer of sand and kept continuously wet. If sand is used, care shall be taken so that all pipe outlets, conduits, etc., are properly plugged.

4. Continuous sprinkling of the exposed surfaces using approved sprinkling devices, lines of perforated pipe, etc.

Reservoir roof concrete curing shall be cured by continuous sprinkling using approved sprinkling device or as approved by the Manager.

For concrete curing for structures other than reservoir concrete, in addition to the curing methods listed above, Contractor may use a curing compound that complies with the requirements of ASTM C 309 when tested at the manufacturer's recommended rate of coverage and that the manufacturer states is compatible with all floor adhesives, toppings, paint or other finish materials. The compound shall be applied in accordance with the manufacturer's printed instructions. Contractor shall submit manufacturer's data sheet.

Wax-based curing compound will not be permitted.

For the purpose of curing, the Contractor shall maintain for 12 hours daily, including Saturdays, Sundays and holidays, workers whose sole duty shall be to keep the curing processes in operation.

The Manager reserves the right to reject concrete that was not provided with the specified curing.

S. Surface Finishes.

1. Architectural Concrete. All concrete vertical surfaces shall be thoroughly worked during the placing of concrete by the combined use of internal vibrators and spading tools to produce a surface free from water and air pockets or "honeycomb".

Upon removal of forms, all form tie holes shall be dampened and pointed with water plug. After the pointing mortar has set, the entire surface shall be cleaned thoroughly and all voids filled. The surface shall then be dampened and a cement "wash coat" rubbed into the surface with a carborundum stone operated in a uniform circular motion. The consistency of cement wash grout shall be about that of a very stiff oil paint.

After the grout has dried, a clean dry brush shall be used to remove excess grout; only the thinnest coat required to cover the surface shall be left in place. The finished concrete surface shall be kept damp for a period of three days to provide proper curing.

2. Integral Floor. After the concrete has been brought to the established grade and before the concrete has taken its initial set, the surface shall be sprinkled with a dry mix of one part Portland Cement to two parts of screened sand and troweled to a hard, smooth finish, free from trowel or tool marks.

3. Non-Slip Topping Surface for All Steps and Stair Treads. The surface of all concrete steps and stair treads shall be floated and before the final troweling, particles of aluminum oxide (Al_2O_3), or ceramically bonded abrasive aggregate shall be spread uniformly over the surfaces. The particles shall be between 0.015 and 0.100-inch in size and shall be spread at not less than 1/4-pound per square foot.

The particles shall be spread over the surface and shall be tamped flush with the surface by means of a steel trowel, care being taken not to bury the chips. Prior to spreading the ceramically bonded abrasive aggregate on the surface, the particles will be dampened thoroughly. The surface shall then be troweled. After curing, the ceramically bonded abrasive aggregate shall be exposed slightly by rubbing the surface with an abrasive brick and water.

4. Retardant Concrete Coating. All concrete surfaces to receive mortar topping shall be treated with retardant concrete coating to expose concrete aggregates and obtain rough bonding surfaces.

Retardant concrete coating shall be an NSF approved coating or approved equal and it shall be applied in accordance with the manufacturer's instructions.

Retardant concrete coating shall be considered incidental and payment shall be included in the cost of concrete.

T. Payment. Payment for CONCRETE WORK (1) will be made at the respective Unit Price Bids or Lump Sum Bids, for the various classed of concrete, or (2) will not be made directly but shall be included in the payment of which it is a part. In either case, such payment shall represent full compensation for furnishing all materials, labor, tools, equipment and incidentals required to complete the work.

Payment quantity under Unit Price Bid shall be determined from computation based on the concrete dimensions as shown on the plans or as directed by the Manager.

303.04 REINFORCING STEEL.

A. Description. Reinforcing steel shall consist of furnishing all labor, materials, tools, equipment and incidentals required for placing concrete reinforcement in accordance with the Water System Standards and the details shown on the plans.

B. Materials. All reinforcing steel shall be of grade 60, billet steel, deformed type and shall conform with ASTM A615, "Specifications for Deformed and Plain Billet-Steel Bars for Concrete Reinforcement." The use of re-rolled rail steel or cold twisted bars will not be permitted.

All reinforcing steel shall be new, free from dirt, detrimental scale, paint, oil or other foreign substances. No material cleaned by sandblasting will be allowed. In the absence of manufacturer's quality mark, the Manager may require standard ASTM tests be made on representative samples before acceptance. All cost incurred in connection with these tests shall be borne by the Contractor.

C. Fabrication. Reinforcing steel shall be fabricated in accordance with approved standards of American Concrete Institute. No reinforcing steel shall be cut or bent with the use of a welding torch.

D. Placing. Reinforcing steel shall be accurately placed as shown on the plans and adequately secured in position by tying and by use of concrete blocks or metal chairs and spacers.

Metal chairs and spacers shall be in accordance with the specification of the Concrete Reinforcing Steel Institute. All vertical legs shall be of the turned-up type.

Concrete blocks shall consist of 1:3 mortar. For miscellaneous concrete structures, such as manhole slabs and pipe reaction blocks, blocks split from sound cement brick may be used.

Tie wires shall be black annealed iron wire No. 16 B.W.G. for No. 5 bars or lighter, and No. 14 B.W.G. for heavier bars.

E. Splicing. Reinforcing steel shall be in full lengths as shown on the plans. Where splices are required, the bars shall be lapped a length sufficient to transfer the entire stress from bar to bar without exceeding the allowable bond and shear stresses in accordance with the ACI Building Code. The minimum overlap for a lapped splice in reservoir hoop reinforcement shall be 40 bar diameters.

F. Protection of Material. Reinforcing steel and appurtenances to be used on the project shall be stored under cover, off the ground and protected from damage at all times.

G. Payment. Unless otherwise specified, no separate payment for reinforcing steel will be made; the compensation for such work shall be deemed to be included in the Lump Sum Bid for the item of which it is a part.

303.05 WELDED WIRE FABRIC.

A. Description. Welded wire fabric shall consist of furnishing all labor, materials, tools, equipment and incidentals necessary for placing welded wire fabric as concrete reinforcement in accordance with the Water System Standards and the details shown on the plans.

B. Material and Placing. Welded wire fabric for concrete reinforcement shall be galvanized wire and shall conform with ASTM A185 "Specifications for Welded Wire Fabric for Concrete Reinforcement".

The gauge of the wire and dimensions of the mesh shall be as shown on the plans.

Wire fabric shall be rolled out flat and firmly held in place to the lines and grade as shown on the plans before placing concrete. Splices shall be made by lapping not less than one mesh and securely tied.

C. Payment. No separate payment for WIRE FABRIC will be made; the compensation for such work shall be deemed to be included in the Unit Price Bid or Lump Sum Bid, whichever is specified, for the item of which it is a part.

303.06 REINFORCED CONCRETE RESERVOIR.

A. Description. Reinforced concrete reservoir and appurtenances shall be constructed to the lines, grades and dimensions as detailed on the plans or ordered in writing by the Manager in accordance with the requirements specified hereinafter and, in addition, the specifications for the various items which are to constitute the complete structure, in place complete, ready for use.

B. Site Work. This item of work shall be as specified under Section 303.02 - SITEWORK.

C. Concrete Work. This item of work shall be as specified under Section 303.03 – CONCRETE WORK. Exterior surface of the reservoir wall shall receive architectural finish.

1. Construction and Expansion Joints. Construction and expansion joints shall conform to the details as shown on the plans or as required by the Manager. Unless otherwise specified, all joints shall be provided with waterstops.

2. Horizontal Construction Joint. The horizontal construction joint in the reservoir wall shall be formed as shown on the plans. The surface of the joint shall be roughened with stiff wire brushes when the deposited concrete has partially set. Steel reinforcement shall be cleaned of concrete.

3. Wall Sliding Joint. Sliding joint at the base of the reservoir wall shall be constructed as detailed on the plans.

The surface of the footing shall be finished smooth to a same horizontal plane along the circumference. The 2-inch leveling course mortar topping shall be poured in one continuous layer after the entire floor has been completed. Two-inch mortar topping shall be checked for plumbness and trueness of the level horizontal surface. The surface shall be allowed to dry and painted with Carboline Bitumastic Super Service Black (Coal Tar) or approved equal sealing the edges and joints. The pads shall be trimmed to fit the curvature of the wall. All joints shall be true, even, butt joints. Joints on the top and bottom layer shall be staggered. A second application of Carboline Bitumastic Super Service Black (Coal Tar) shall be painted over the pads to seal the top, edges and joints to prevent concrete from entering the sliding joint.

Pad shall be 1/16-inch thick and shall be composed of non-asbestos fibers bonded together with a cementing medium rendering it tough and pliable without plies or laminations. Pads shall be coated on one surface with graphite.

4. Interior Perimeter Seal. The seal where required on the plans shall be poured before the reservoir leakage test.

5. Roof Sliding Joint. Sliding joint at the top of the reservoir wall shall be constructed as detailed on the plans. The top surface of the wall shall receive an even, true, plane, level finish. The surface shall be allowed to dry, then a layer of ¾-inch thick Rubatex R431N neoprene or approved equal shall be placed, secured to wall with Rubatex 27780 cement or approved equal. Neoprene shall be trimmed to the curvature of the reservoir. The top surface of the neoprene shall then be coated with Mobil "Gilsomastic" or approved equal prior to pouring the roof slab.

6. Surface Finish. The exterior and interior wall and column surfaces shall be finished to show no unsightly defects, fins, and irregular projections. All form tie holes shall be pointed with "water-plug" flush with the surface. On all interior surfaces, air holes shall be filled by sack rubbing. All exterior surfaces shall have an architectural finish.

D. Cement Topping Coat. *For Hawaii and Maui Only: No reservoir cement floor topping. Apply an epoxy system approved by the Manager on interior walls, columns and floor surfaces, unless otherwise specified.*

For Kauai and Oahu Only: Reservoir floor topping, if required, shall be as shown on the plans and shall not be installed until all formwork and shoring for the roof slab has been removed. Any work, in the opinion of the Manager, which will damage the surface shall not be allowed after the topping has been installed.

Cement Topping Coat shall be as follows:

1. Description. Unless directed otherwise, a cement topping coat consisting of the furnishing of all labor, materials, tools and equipment necessary for installing the reservoir cement topping coat to the thickness as shown on the plans and as specified hereinafter will be required.

2. Material. Mortar for topping coat shall consist of one part Portland cement to 3 parts fine aggregate (1½ parts sand and 1½ parts No. 4 crushed rock) as specified in Section 303.03 - CONCRETE WORK, with just enough water to make a workable mix.

Bonding grout shall be Portland cement, mixed to a thick creamy consistency.

3. Installation. Concrete surface shall be cleaned and prepared by scrubbing with wire brushes in conjunction with the use of an air and water jet. If necessary, the surface shall be chipped and roughened to secure proper bond. All excess water shall be removed by brooming or by the use of an air jet.

Bonding grout shall be brushed into the clean and damp surface just ahead of the mortar. Before the grout has set, mortar shall be placed and steel troweled to a finish, free from trowel or tool marks.

Floor mortar topping shall be poured after the roof slab is completed, all forms and shoring removed and prior to placement of the asphalt seal at the wall and floor joint.

4. Protection and Curing. The finished surface shall be adequately protected from damage until completion of the structure. The Contractor shall replace all damaged or faulty areas at the Contractor's own expense to the satisfaction of the Manager.

The finished surface shall be covered with polyethylene sheet or sisal craft paper with one-inch layer of sand, uniformly distributed and kept continuously moist for 14 days to cure the topping. Topping may also be cured by ponding.

E. Built-up Roofing. Built-up roofing shall be as detailed on the plans and as specified under Section 303.16 - BUILT-UP ROOFING or as required by the Manager.

F. Leakage Test. Leakage testing and disinfection shall be as specified under Section 303.10 - RESERVOIR LEAKAGE TEST AND DISINFECTION PROCEDURES.

G. Payment. Payment for REINFORCED CONCRETE RESERVOIR and appurtenances will be made at the Lump Sum Price Bid and shall represent full compensation for furnishing and placing all materials and for all labor, tools, equipment and incidentals required to construct the reservoir and appurtenances in place complete.

The Lump Sum Price shall include concrete, reinforcing steel, structure excavation and backfill, leakage test and disinfection, roofing system and appurtenance, ductile iron influent, effluent, overflow and washout piping systems, chlorination line, sampling spigot line, concrete pipe jackets, interior ladder, exterior railing, painting, cement topping coat and all accessories measured to the outside edge of the reservoir footing, surveying work and all other appurtenant work all in accordance with the approved plans and specifications.

No separate payment for RESERVOIR CEMENT TOPPING COAT will be made; the compensation for such work shall be deemed to be included in the Lump Sum Bid for reservoir and appurtenances.

303.07 PRESTRESSED CONCRETE RESERVOIR.

A. General. In addition to all the requirements specified under Section 303.06 - REINFORCED CONCRETE RESERVOIR, this item covers the construction of post-tensioned prestressed concrete reservoir as detailed on the plans or as directed in writing by the Manager in accordance with the requirements specified hereinafter and the specifications for the various items which are to constitute the complete structure in place complete, ready for use.

Post-tensioning tendons shall be carefully aligned and secured in position in the wall to minimize accidental disarrangement during concreting.

No horizontal construction joint in the reservoir wall shall be allowed unless otherwise directed by the Manager.

B. Post-Tensioning System.

1. Button Head System. Tendons for post-tensioning prestressed concrete shall consist of parallel lay galvanized strands composed of the required number of 1/4-inch diameter, high tensile, cold drawn, stress relieved wire having a guaranteed minimum ultimate tensile strength of 240,000 psi prior to galvanizing.

Galvanized strands shall retain a guaranteed minimum ultimate tensile strength equal to 88% of ungalvanized strand.

Stress relieved wire for post-tensioning shall display a high yield strength and a reasonable elongation before rupture. Minimum yield strength at one percent elongation under test load shall be equal to 85 percent of specified ultimate tensile strength. Minimum elongation at rupture shall be 4 percent in 10 inches. Elongation tests shall be in accordance with ASTM A370 "Standard Methods and Definitions for Mechanical Testing of Steel Products."

The longitudinal elongation test to destruction shall be performed on a 4 feet sample in the as-fabricated and finished condition. The results shall be recorded by autographic stress-strain diagrams with yield points and modulus of elasticity precisely noted thereon. All laboratory testing of samples and all strain measurements at the construction site shall be made by an independent testing laboratory recognized as specialists in such work and approved by the Manager. The results of all tests and measurements shall be sent to the Manager accompanied by a certified statement of whether or not the specification requirements have been attained. All costs incurred with the aforementioned test shall be incidental to the project.

Positive end anchorage shall be provided by means of a 3/8-inch button head cold formed on each end of each wire after threading through the terminal hardware. Anchoring shall be factory assembled and shall develop the full rated strength of the tendons.

All tendons shall be furnished in continuous lengths without splices or couplings and shall be delivered completely fabricated ready for immediate replacement in forms. Each button head shall be color coded.

2. Strand Tendon. Tendons for post tensioning, prestressed concrete under this system shall consist of galvanized seven wire strands having a nominal diameter of ½-inch. Wires shall be cold drawn and stress relieved. Strands shall have a guaranteed minimum ultimate tensile strength of 270,000 psi prior to galvanizing and shall conform to ASTM A416, "Standard Specification for Uncoated Seven-Wire Stress-Relieved Strand for Prestressed Concrete". Galvanized strand shall have a guaranteed minimum ultimate tensile strength equal to 88% of ungalvanized strand.

Stress relieved wire for prestressing shall display a high yield strength and a reasonable elongation before rupture. Minimum yield strength at one percent elongation under test load shall be equal to or in excess of 35,000 pounds. Minimum elongation at rupture shall be 3.5 percent in 24 inches. Elongation tests shall be in accordance with the "Standard Methods and Definitions for Testing of Steel Products", ASTM A370.

All strands shall be furnished in continuous lengths without splices or couplings and shall be delivered completely fabricated. Each strand shall be color coded at the ends.

Approximate modulus of elasticity (based on nominal area): 30,000,000 psi.

Elongation in 20 diameters after rupture, min. 4.0%.

Reduction in area (from measured area) min. 20%.

Tests to determine the physical properties as listed above shall be performed on the full section of the tendon after galvanizing.

One longitudinal elongation test to destruction shall be performed on a sample of suitable length for each tendon size in the as-fabricated and finished condition. An elongation load test shall be conducted on the samples of each coupler size to demonstrate the ability of the couplers to develop the full strength of the tendon material specified. Elongation tests shall be in accordance with ASTM A370, "Standard Methods and Definitions for Mechanical Testing of Steel Products."

The results shall be recorded by autographic stress-strain diagrams with yield points and modulus of elasticity precisely noted thereon. All laboratory testing of samples and all strain measurements at the construction site shall be made by an independent testing laboratory recognized as specialists in such work and approved by the Manager. The results of all tests and measurements shall be sent to the Manager accompanied by a certified statement of whether or not the specification requirements have been attained. All costs incurred with the aforementioned test shall be incidental to the project.

3. Rod Tendon. Prestressing rods shall be galvanized high tensile strength alloy steel bars conforming to ASTM A322, "Standard Specification for Hot-Rolled Alloy Steel Bars" and A-29, "Standard Specification for Steel Bar, Carbon and Alloy, Hot-Rolled and Cold Finished, General Requirements", with a minimum yield strength of 140,000 psi at 0.7 percent elongation and an ultimate strength of 260,000 psi prior to galvanizing. Rods shall be delivered completely fabricated and pre-bent to the required shape and enclosed in rigid metal duct, ready for immediate placement. Each tendon end shall be color coded. Galvanized rod shall have a guaranteed maximum ultimate tensile strength equal to 88% of ungalvanized rod.

Rod anchors shall be compatible to the rod having yield and ultimate strength greater than the rods. Rod anchors shall be capable of transmitting and withstanding all loads without impairing the strength and/or integrity of the rod under load.

Six copies of mill certificates and stress-strain curve based on each representative rod size specimen of finished steel furnished shall be submitted to the Manager one week prior to installation. For each lot of 10 tons of steel or portion thereof, a sample shall be tested and the stress-strain curve plotted.

Physical properties of the rods shall conform to Table 300-11.

Table 300-11 - ROD PROPERTIES

Nominal Rod Diameter (Inches)	Nominal Steel Area of Rod (Sq. Inches)	Breaking Strength KIPS (Spec. Grade)	Yield Strength Minimum @ 70% Exten. KIPS (Spec. Grade)
7/8	0.601	96	84
1-1/8	0.994	159	139
1-3/8	1.485	238	208

One longitudinal elongation test to destruction shall be performed on a sample of suitable length for each rod size in the as-fabricated condition. An elongation load test shall be conducted on the samples of each coupler size to demonstrate the ability of the couplers to develop the full strength of the rod material specified. Elongation tests shall be in accordance with ASTM A370, "Standard Methods and Definitions for Mechanical Testing of Steel Products."

The results shall be recorded by autographic stress-strain diagrams with yield points and modulus of elasticity precisely noted thereon. All laboratory testing of samples and all strain measurements at the construction site shall be made by an independent testing laboratory recognized as specialists in such work and approved by the Manager. The results of all tests and measurements shall be sent to the Manager accompanied by a certified statement of whether or not the specification requirements have been attained. All costs incurred with the aforementioned test shall be incidental to the project.

All tendons shall be furnished in continuous lengths without splices or couplings and shall be delivered completely fabricated ready for immediate placement in forms.

C. Grouted Tendons. Galvanized tendons to be grouted shall have wire enclosed in mortar-tight flexible metal conduit, of 0.010 to 0.012-inch thickness, unpaced and fully interlocked. The shop assembled connection between the conduit and the end bearing assemblies shall be adequate to insure a mortar-tight enclosure from terminal to terminal. The anchor shall provide for grout passage through the tendon. Proper fittings for attachment to the terminal hardware shall be furnished.

D. Steel Work. All steel work shall comply with AISC specifications for Design, Fabrication and Erection of Structural Steel for Buildings. Prior to fabrication or installation of any metalwork, the Contractor shall submit six (6) sets of shop drawings to be reviewed and approved by the Manager. Structural steel shall conform to ASTM A588. All steel work shall be painted as specified in Section 303.27 - PAINTING.

Positive end anchorage shall be provided on each end of each strand after threading through the terminal hardware. Anchoring shall be securely assembled to develop the full rated strength of the strand. Proper fittings for attachment to the terminal hardware shall be furnished. All holes in the anchor plate shall be properly aligned, drilled and reamed to accommodate the strands without any kinks. Anchor plates and appurtenances shall be designed as follows:

1. Anchor plates and appurtenances shall be sized to withstand all forces applied, including mill and shop tolerances and maintain all stresses below AISC and AWS requirements.

2. Surface area of anchor plates and appurtenances bearing on the concrete wall shall be sized to maintain all stresses transmitted to the concrete within allowable limits according to the following equations:

   $$\text{at service load - } f_{cp} = 0.6\, f'_c \sqrt{A'_b / A_b} \leq f'_c$$

   but not greater than f'_c

   At transfer load -

   $$f_{cp} = 0.8\, f'_{ci} \sqrt{(A'_b / A_b)} - 0.2 \leq 1.25\, f'_{ci}$$

   but not greater than $1.25\, f'_{ci}$

   where

   f_{cp} = permissible compressive concrete stress.

   f'_{ci} = compressive strength of concrete at time of initial prestress.

   A'_b = maximum area of the portion of the concrete anchorage surface that is geometrically similar to and concentric with the area of the anchorage.

   A_b = bearing area of the anchorage.

   f'_c = compressive strength of concrete at 28 days.

   As used in the above equations fcp is the average bearing stress, P/A, in the concrete computed by dividing the force P of the prestressing steel by the net project area, A, between the concrete and the bearing plate or other structural element of the anchorage which has the function of transferring the force to the concrete.

   Anchor plates shall be of ASTM A588 steel plate, painted in accordance with Section 303.27 - PAINTING prior to installation. All welds and corners shall be ground smooth prior to priming. All welds shall conform to AWS Specifications.

Six copies of mill certificates and stress-strain curve based on a representative specimen of steel furnished shall be submitted to the Manager one week prior to installation. For each lot of 10 tons of steel or portion thereof, a sample shall be tested and the stress-strain curve plotted.

E. Prestressing. The reservoir wall shall be prestressed by the post-tensioning method, using materials and equipment as manufactured or supplied by the prestressing company. The stressing equipment supplied shall be properly calibrated prior to stressing work and a certificate of calibration by a reputable testing laboratory shall be submitted to the Manager. Calibration shall show the total applied pressure for the respective stressing equipment to be used.

The stressing shall be done simultaneously from each end of the tendon. Each pair of jacks shall have equal ram area and capacity. The stress in the tendon shall be brought up uniformly at 500-pound intervals as read on the gauge. Control and synchronizing of the stressing operation shall be by constant reliable, audible communication, radio, telephone or approved equal.

The Manager shall have the right, and may require the Contractor to check from time to time that the specified initial force is being applied. The applied force shall be measured by both the elongation of the tendon and the hydraulic pressure applied. Reasonable agreement between both methods shall be obtained.

The Contractor shall measure and keep an accurate record of the elongation of each wire tendon together with the jacking force applied. The Manager shall be furnished with the record.

Stressing shall not be started before the wall concrete has attained 90 percent of the 28-day compressive strength specified.

Stressing shall be done by a licensee or construction affiliate approved by the prestressing company and a certificate of approval shall be furnished to the Department.

All personnel employed in the stressing work shall have performed similar work satisfactorily and shall provide their qualifications and experience record to the Manager. All stressing shall be done under the supervision of a technician of the prestressing company experienced in the post-tensioning of reservoir wall and only in the presence of the Manager.

Contractor shall take all necessary precautions to insure that stressing operations are conducted in a safe manner.

F. Stress Retention. After stressing, the elongation of the tendons shall be maintained with metal shims pre-cut to the required dimension and marked for each tendon. All shims and plates shall be primed in accordance with Section 303.27 - PAINTING prior to installation.

G. Grouting. All metallic enclosures shall be pressure grouted not sooner than six hours after stressing operation has been completed. Prior to grouting, the conduit shall be flushed with clean water to insure free passage of grout and then blown out with compressed air. A grout pump capable of developing 50 to 100 psi shall be used to completely fill the conduit. The grouting of each tendon shall be one continuous operation and shall be maintained for at least 2 minutes after a steady state flow has been achieved.

Grout shall consist of neat cement and water mixed to the consistency of thick paint.

H. Storage and Protection of Materials. All materials for the project, inclusive of but not limited to strands, rods, anchor plates, etc., shall be stored off the ground under protective cover and protected from physical and chemical damage. When placed in the work, all materials shall be free from dirt, dust, rust, oil, or other foreign substances. Once placed, all terminal end and exposed rods or tendons shall be cleaned, dried, coated with 4 Mil DFT Kolorane or approved equal then bound in a water tight wrapper, off the ground and protected from physical abuse. This item of work shall be strictly adhered to.

I. Mill Certificates. Six copies of mill certificate and stress-strain curve based on a representative specimen of steel furnished shall be submitted to the Manager. For each lot of 10 tons of steel or portion thereof, a sample shall be tested and the stress-strain curve plotted.

J. Cutting of Strands or Rods. Cutting of all pre-stressing rods or strands and appurtenances shall be performed without the use of heat or flame.

K. Layout Drawings. Contractor shall submit 6 sets of tendon and stressing head layout, shop and fabrication drawings, based on final field measurements, prior to fabrication, for approval by the Manager.

L. Payment. Payment for PRESTRESSED CONCRETE RESERVOIR and appurtenances will be made at the Lump Sum Price Bid in the Bid. The Lump Sum Price shall represent full compensation for all materials, labor, tools, equipment and incidentals required to construct the reservoir and appurtenances, in place complete as shown in the plans.

The Lump Sum Price shall include concrete, reinforcing steel, post tensioning system, structure excavation and backfill, reservoir leakage test and disinfection, roofing system and appurtenance, ductile iron influent, effluent, overflow and washout piping systems, chlorination line, sampling spigot line, concrete pipe jackets, interior ladder, exterior railing, painting, cement topping coat and all accessories measured to the outside edge of the reservoir footing, surveying work and all other appurtenant work all in accordance with the approved plans and specifications.

303.08 FACILITY PIPING.

A. Description. Facility piping shall include furnishing all labor, materials, tools and equipment required for installation of all pipes, fittings, valves and appurtenances necessary to complete the reservoir influent-effluent, overflow, and washout lines, pump station suction and discharge lines, well field discharge lines and other facilities painting as shown on the plans and as specified in these Standards.

B. Material and Construction. All materials shall be furnished and installed in accordance with the requirements specified elsewhere in these Standards for water mains and appurtenances.

All pipes and fittings shall be ductile iron. *(For Maui Only: All reservoir interior exposed overflow piping shall be PVC pipe.)*

All valves on site shall be gate valves unless otherwise specified on the construction plans.

Flap valve shall be as detailed or called for on the plans.

C. Payment. No separate payment for RESERVOIR INFLUENT-EFFLUENT, OVERFLOW AND WASHOUT LINES within the reservoir structure (up to the face of the reservoir footing) and for pump station suction and discharge lines within the limits of lump sum payment as shown on the plans inclusive of excavation and concrete jacket will be made; the compensation for such work shall be deemed to be included in the Lump Sum Price Bid for the reservoir and appurtenances, the pump station and appurtenances or other facility.

Payment for pipes, fittings, valves and appurtenances including excavation and backfill beyond the reservoir footing, or pump station limits of lump sum payment will be made at their respective Lump Sum or Unit Price Bids in the bid. Measurement for payment shall be as specified under water mains and appurtenances, unless otherwise specified.

303.09 SAMPLING TUBES AND CHLORINE INJECTION LINE.

A. Description. This item of work shall include the furnishing of all labor, materials, tools, equipment and incidentals required for the installation of all pipe, fittings, valves and appurtenances necessary to complete the sampling tube and chlorine injection line as shown on the plans in place complete, ready for use.

B. Material and Construction. All materials shall be furnished and installed in accordance with the requirements specified elsewhere in these Standards for copper and PVC pipe and appurtenances.

3/4-inch pipe for sampling tube shall be Type K (Hard) copper pipe.

Fitting for sampling tube shall be brass or bronze.

Pipe for chlorine injection line shall be PVC Schedule 80.

All piping and fitting shall be isolated from the reinforcing steel.

Sampling tube, treadless spigot and chlorine injection line shall be located as detailed on the plans.

C. Payment. No separate payment for SAMPLING TUBE AND CHLORINE INJECTION LINE will be made; the compensation for such work shall be deemed to be included in the Lump Sum Bid for the reservoir or facility and appurtenances.

303.10 RESERVOIR LEAKAGE TEST AND DISINFECTION.

A. General. Upon completion of the construction of a reservoir and prior to painting if specified, the Contractor shall perform all work necessary for the satisfactory completion of the leakage test and disinfection.

For Hawaii, Maui and Kauai Only: The disinfection procedures shall not be done concurrently with the leakage test. The leakage test shall be done first followed by painting of the interior and exterior tank surfaces as called for then followed by disinfection. Methods of performing the leakage test and disinfection shall be as described below but the sequence shall be adjusted accordingly as stated above.

Prior to actual chlorination work, the Contractor shall submit to the Manager, for approval, a plan and schedule delineating the method or steps by which the Contractor proposes to accomplish the work.

B. Reservoir Leakage Test and Disinfection Procedure. The reservoir leakage test and disinfection procedure shall be as follows:

1. Before filling a new reservoir for a leakage test, the reservoir shall be cleaned of all debris.

2. The leakage test consists of filling the reservoir to its overflow level with potable water and observing for any leaks after seven (7) days. The disinfection procedures outlined below will be followed.

3. *For Hawaii, Kauai and Oahu only*:

a. After hosing down the interior walls of the reservoir with chlorinated water with at least 50 mg/1 concentration, the floor shall be scrubbed and hosed with the wash water being flushed through the washout. The washout valve shall be closed, and the line filled with water as evidenced by its appearance at the floor level. The valve shall then be opened, and the washout drained to rid the line of any remaining debris. The Contractor shall utilize a pump with adequate pressure and velocity capacity for the hosing work. The discharge of all waters shall comply with all NPDES requirements.

b. The leakage test for the reservoir shall consist of filling the reservoir at 5 feet height increments up to its overflow level and observing for any visible leaks on the exterior surfaces after each increment and at the end of seven (7) days. Should any leaks, sweat, or other evidence of moisture be present, the Contractor shall drain the reservoir to no lower than the inner perimeter water seal and shall take immediate action to seal the leak using appropriate methods acceptable to the Department. After the leaks are sealed, the leakage test shall be re-conducted for another seven (7) days. This procedure shall be repeated until the 7-day leakage test is successfully passed.

c. Should the reservoir successfully pass the 7-day leakage test, 5% hypochlorite solution shall be added at a rate of 5 gallons per one million gallons of water. The water will then be ready for potable use.

d. Sampling. In order to confirm that the water in the reservoir is acceptable for potable use, the Contractor shall collect two (2) water samples from the reservoir. The first sample shall be taken after the 7-day leakage test is completed and 12.5% hypochlorite solution, at a rate of 2 gallons per one million gallons of water, is added to the water in the reservoir. The second sample shall be taken 20 to 28 hours later. *(For Oahu only: The Contractor shall collect one (1) sample for each five feet of water added to the reservoir up to the overflow level. Water shall be held for 24 hours to allow time to confirm the microbiological quality of the water prior to adding the next 5 feet increment of water. At the end of the 7-day leakage test, a final sample shall be collected.)*

   Sampling shall be done by the Contractor under the coordination of the inspector assigned to the project. Sampling bottles shall be furnished by a certified laboratory. Under no circumstances shall the sample bottles be rinsed out.

e. Certification. The water samples shall be analyzed by a laboratory certified by the State Department of Health. The laboratory shall be certified to test for coliforms in potable drinking water.

The reservoir disinfection procedure shall be considered acceptable after the laboratory test results show the following for each water sample collected:

1. Total coliform counts equal to zero (0); and
2. Total bacterial count is less than 200 colonies per 100 mils.

If any water sample fails to meet the criteria noted above, the disinfection of the reservoir shall be repeated as directed by the Manager. After the reservoir is re-disinfected, new water samples shall be collected.

All costs associated with the microbiological testing shall be at the Contractor's expense.

4. *For Maui Only: After completion and acceptance of all leakage testing, disinfection procedure shall be as specified in AWWA C652 - "Standards For Disinfection Of Water-Storage Facilities". The discharge of all waters shall comply with all NPDES requirements.*

5. If repairs are done to the interior of the reservoir due to any leaks found during the 7-day leakage test, repeat from step "1" as required by the Manager. All materials used for the repairs done to the interior of the reservoir shall be in compliance with NSF 61. All items of work required due to the presence of leaks, sweat, or evidence of moisture on the exterior surfaces shall be at the Contractor's expense.

6. Re-sample and re-chlorinate as necessary and as directed by the Manager.

Although the reservoir is found to be water tight in the first leakage test, the Manager, if deems necessary, may require another leakage test before final acceptance of the reservoir.

C. Payment. Unless otherwise specified, no separate payment for the RESERVOIR LEAKAGE TEST AND DISINFECTION will be made; the compensation for such work shall be deemed to be included in the Lump Sum Bid for reservoir and appurtenances. The payment shall represent full compensation for furnishing all materials and for all labor, tools, equipment and incidentals, including but not limited to all water costs for the reservoir leakage test and disinfection, required for the work.

303.11 STRUCTURE CLEAN-UP.

A. Description. At the completion of the work, the Contractor shall remove all surplus materials, rubbish and debris of every kind from the project site.

The reservoir shall be scrubbed clean and placed in a neat condition prior to the water leakage test.

B. Payment. No separate payment for STRUCTURE CLEAN-UP will be made; the compensation for such work shall be deemed to be included in the Lump Sum Bid for the structure and appurtenances.

303.12 PROTECTION OF RESERVOIR.

A. General. The reservoir shall be protected from "drying-out" during construction. Upon completion of the reservoir floor slab, the floor shall be ponded with water to the inner perimeter of the asphalt water seal for the duration of the project.

After the completion of the reservoir leakage test, the reservoir shall remain filled up to the time when the reservoir is chlorinated and placed in service.

B. Payment. No separate payment for PROTECTION OF RESERVOIR will be made; the compensation for such work shall be deemed to be included in the Lump Sum Bid for the reservoir and appurtenances.

303.13 UNIT MASONRY.

A. Description. This item of work shall include furnishing all labor, materials, tools, equipment and incidentals required to construct all masonry work as indicated on the plans and as specified in these Standards.

B. Materials. Materials shall be type and quality indicated on the plans and specified in these Standards. Contractor desiring to substitute products for those specified must pre-qualify all such substitutions a minimum of 10 days prior to bidding.

1. **Hollow Concrete Masonry Units.** Hollow concrete masonry units shall be as follows:

   a. Load Bearing: Units other than screen blocks shall conform to the requirements of latest revision of ASTM C90, Grade N, "Standard Specification for Hollow Load Bearing Concrete Masonry Units". Units for other than screen block wall shall be 2-core type, 16-inch nominal length, and 8-inch nominal thickness except where otherwise indicated. Units for jamb, corner, lintel and other special shapes shall be provided as required. Screen block pattern and size shall be as indicated on the plans.

   b. Brick: Conform to ASTM C55, Grade A, "Standard Specification for Concrete Building Brick."

2. **Cement.** Portland cement conforming to the current ASTM C150, Type I, "Standard Specification for Portland Cement."

3. **Aggregates.** Shall conform to the current ASTM C144, "Standard Specification for Aggregates for Masonry Mortar."

4. Water. Clean, potable and free of oils, acids, alkalis, organic materials or other deleterious substances.

5. Horizontal Joint Reinforcement. Galvanized "Dur-o-Wal", or approved equal, trussed design conforming to ASTM A82, "Standard Specification for Cold Drawn Steel Wire for Concrete Reinforcement."

All splices shall be minimum of six inches long. Four-inch and eight-inch sizes shall be installed to match the thickness of the masonry units.

6. Mortar Admixture. "Omicron" or approved equal added to the mortar mix in accordance with manufacturer's specifications.

7. Hydrated Lime. Conform to the current Specification C-207, Type S.

8. Masonry Cement. Masonry cement shall be super mortar or Kaiser mortar conforming to ASTM C91.

C. Certificate. A certificate shall be issued by the manufacturer to the Manager showing compliance with the ASTM requirements of these specifications for hollow concrete masonry units.

D. Sample Blocks. A sample of each of the masonry units required shall be submitted to the Manager for approval prior to starting work.

E. Mortar and Grout. The method of proportioning materials for mortar and grout shall be volume and in such manner that the specified proportions can be controlled and accurately maintained. Mixing shall be by a mechanical batch mixer for at least three minutes for mortar and five minutes for grout.

1. Mortar shall be freshly prepared and uniformly mixed in the following proportions to obtain 2,000 psi, 28-days compression strength. "Omicron" or approved equal shall be added in accordance with manufacturer's specifications and sufficient water shall be used consistent with satisfactory workability. Mortar which is not used within 30 minutes after water has been added shall be wasted. Retempering of mortar shall not be permitted. The mortar mix shall consist of the following:

1 part Portland cement
1/4 part hydrated lime
3 parts sand

2. **Grout** shall be:

   a. Prepared by a commercial ready-mix plant, 2500 psi grout mix.

   b. Prepared at job site.

   c. Grout mix shall consist of the following:

      1 part Portland cement
      2 parts sand
      1 part pea gravel

      (not more than 1/10 part lime may be added)

      Sufficient water shall be used to produce a fluid consistency for pouring and not so fluid that the constituent parts separate when grout is poured.

F. Reinforcing. Reinforcing for unit masonry shall be as follows:

1. All masonry units shall be reinforced both vertically and horizontally. Horizontal joint reinforcing, specified hereinbefore, shall be furnished and installed under this section.

2. Vertical and horizontal bar reinforcing shall be free from scale, rust or other coatings that will destroy bond. They shall be straight except for bends around corners or where bends or hooks are detailed. Size and spacing shall be as indicated on the plans. All cells with reinforcement shall be fully grouted.

   Splices shall be lapped as indicated, but not less than 32 diameters or 16 inches, whichever is longer. At jambs of doors, windows and other openings, corners, junctions and ends of walls, install two #5 bars in the end cell and fill cells with grout. Such bars shall extend at least 24 inches beyond the corners of the opening.

3. Horizontal reinforcing shall be as indicated on the plans. At intersections, corners and splices, horizontal reinforcing shall be placed and bent in accordance with manufacturer's recommendations.

G. Anchors. Coordinate work with other trades as necessary to set into tile walls all anchors with sufficient mortar to make them secure as detailed on the plans.

H. Storage and Handling. Masonry units shall be carefully stacked prior to use and shall be properly protected. All units shall be handled with reasonable care to prevent marring or damaging of faces, edges and corners of units. In no case shall units that were physically abused or damaged be permitted to be used on the project.

I. Workmanship. All masonry units shall be handled so that edges and faces will not be chipped, spalled or cracked. All beds on which masonry is to be laid shall be cleaned and wetted properly. All work shall be built plumb, level, square and true. All drilling, cutting and fitting, as may be required for and necessary to accommodate other trades shall be done neatly by power driven carborundum saw. Bolts, anchors, ties, conduits and similar items for the installation of work under other sections of these specifications shall, as far as practicable, be placed as the work progresses.

All walls and partitions and interior walls shall be carried to underside of beams or slabs as the case may be and shall be wedged at the top.

Masonry units shall not be wet before being used. Where no bond pattern is shown or noted, the wall shall be laid up in straight uniform course with running bond.

Masonry units shall be laid with full face shell mortar beds. Vertical head joints shall be buttered well for a thickness equal to the face shell of the block and these joints shall be shoved tightly so that the mortar bonds well to both blocks. Joints shall be solidly filled from the face of the block to the depth of the face shell.

If it is necessary to move a block so as to open a joint, the block shall be removed from the wall, cleaned and set in fresh mortar.

Mortar joints shall be straight, clean and with a uniform thickness of 3/8-inch. Exterior joints shall be concave or rodded unless otherwise noted. Interior joints that are unexposed shall be struck flush.

All cells containing reinforcement shall be filled solidly with grout in lifts not exceeding eight feet. Other cells, as indicated or where required, to be solid for anchors or such items shall be solidly filled. When grouting is stopped for one hour or longer, horizontal construction joints shall be formed by stopping the pour of grout 1½ cell below the top of the uppermost unit. Leave a cleanout hole at bottom of all cells to be grouted. Clean all mortar dropping out of cells prior to grouting.

Cells shall not be filled on the day of erection. Should the construction be terminated prior to reaching the complete height, the grouting of the cells shall be stopped 1½ cell below the top course. Reinforcement shall be doweled out to the minimum lap dimensions of 32 diameters.

Where masonry walls are to be left bare or unpainted, extreme care shall be taken to prevent mortar splotches. All forms shall be made tight and concrete or grout spilled on the wall shall be washed off before it can set up. Walls shall be protected against stains and excess mortar shall be wiped off the surface as the work progresses. After the wall is constructed, it shall be wetted but not saturated with water for curing.

J. Knock-outs and Bond-Beams. Knock-outs and Bond-Beams shall be in such number and placed as called for in the plans and specifications.

K. Tolerances. Tolerances shall be nominal unless other tolerances are specified. Tolerances shall be as follows:

a. Plumb: Maximum allowed variations from plumb shall be as follows:

	Nominal Tolerance
Partitions, columns, end walls, and baffle walls	1/4" in 5 feet 3/8" in 10 feet 1/2" in 20 feet 3/4" in 40 feet
Decorative screen block walls	3/8" in 8 feet

"Plumb tolerances" shall apply to open ends as well as to faces of walls.

b. Maximum allowed variations from level shall be 3/8 inch in 20 feet.

c. Dimensional variation allowable for window and door openings. Masonry work shall meet tolerances for plumb and level. In addition, in both horizontal and vertical dimensions, the size of the opening shall not vary more than 3/8 inch for each dimension, from the specified or dimensioned opening. Mere dimensional tolerance is not sufficient, nor is plumb and level alone - both requirements must be met.

d. Lintels and sills shall have nominal tolerances of 1/4 inch in 10 feet.

L. Cleaning. At the completion of the work, all holes or defective mortar joints in exposed masonry shall be pointed and where necessary, defective joints shall be cut out and repointed. All exposed masonry shall be thoroughly cleaned of mortar droppings and splotches to the satisfaction of the Manager.

Where application of stiff brush and water does not suffice, the surface shall be thoroughly wetted with clean water and scrubbed with a solution of not more than one part hydrochloric (Muriatic) acid to nine parts water followed by a thorough rinsing with clear water. All adjoining work subject to damage shall be carefully protected from damage.

Upon completion of work, all surplus, waste materials, rubbish and debris shall be removed from premises, leaving same in clean and satisfactory condition.

M. Payment. Payment for MASONRY (1) will be made at the Unit Price Bid or the Lump Sum Bid, whichever is specified, or (2) will not be made directly but shall be included in the lump sum payment of which it is a part. In either case, such payment shall represent full compensation for furnishing all materials, labor, tools, equipment and incidentals required to complete the work.

303.14 STONE MASONRY.

A. Description. This item of work shall include the furnishing of all labor, tools, materials, equipment and incidentals required to construct and install stone masonry to the lines and grades shown on the plans and as specified in these Standards.

B. Materials.

1. Stone. Stone shall be clean, durable, free from seams or other imperfections and when tested under AASHTO Test Method Type 96, shall show a wear not to exceed 50%. The sizes, shapes and types shall be as shown on the plans specified in the special provisions or as specified hereunder. The Contractor shall furnish samples of the materials to be used for Manager's approval.

a. Moss rock shall be weathered field lava rock, acceptable to the Architect, available locally, varied in size and shape.

b. Blue rock shall have quarried or shattered face exposed and be as approved by the Architect. (Size distribution should be specified.)

c. Sandstone shall be as broken or cut from the quarries, available locally. (Type at Liberty House Ala Moana and Pearlridge.)

d. Coral rock shall be from local quarries. (Type at Sears Ala Moana.)

e. Puna or pahoehoe rock as available on the Island of Hawaii. (Type at G.C.A. Building)

2. Mortar. Mortar for bedding shall consist of one part cement and not more than three parts fine aggregate. Hydrated lime may be added to the mortar and the quantity shall not exceed 20% of the cement quantity. The lime shall be treated as an addition to and not as replacing any cement.

Fine aggregates shall meet the requirements as shown in Table 300-12:

Table 300-12 - FINE AGGREGATE FOR MORTAR		
	Percentage Passing By Weight	
Sieve Size	Natural Sand	Manufactured Sand
3/8-Inch	100	100
No. 4	95 to 100	95 to 100
No. 8	----	80 to 100
No. 16	----	50 to 85
No. 30	----	25 to 60
No. 50	----	10 to 30
No. 100	0 to 5	2 to 10
No. 200	----	----

C. Installation.

Stone walls shall be laid by experienced stone masons to the best standards of the trades. Stones shall be fully mortared to each other, and areas around vertical reinforcing filled solid with mortar in joints. Fill behind veneer solid with fresh mortar.

Mortar shall first be mixed dry in a tight box (if hand mixed) until the mixture assumes a uniform color, after which water shall be added as the mixing continues, until the mortar attains a consistency such that it can be easily handled and spread with a trowel. A plaster mixer may be used to mix the mortar if so desired. Mortar which is not used within 30 minutes after water has been added shall be wasted. Retempering of mortar shall not be permitted.

Mortar shall be freshly prepared and uniformly mixed in one of the following proportions to obtain minimum of 2000 psi, 28-day compressive strength. Use sufficient water consistent with satisfactory workability.

Large flat stones shall be selected for the bottom or first course and shall be laid in full mortar bed in practically horizontal position. Selected stones, roughly squared and pitched to lines, shall be used at all angles and end faces of walls. All stones shall be fully bedded in mortar and so placed as to break joints at least 6-inches and form a firm bond.

Headers shall be distributed uniformly throughout the walls and shall extend entirely through from front to back face where the wall is less than 24-inches in thickness.

Keystones shall be distributed uniformly throughout walls, internally as well as at horizontal faces.

No spalls shall be used in the face of a wall and the face stones shall be so well bedded that none will be needed. Natural flat surface or cut face of stones shall be used in the exposed face of the wall. Space between the backing stones shall be filled with spalls and mortar. No voids in any part of the wall will be permitted.

Weep holes 3-inches in diameter shall be provided in the walls at locations shown on the plans or at approximately 8 foot centers. Filter material with filter cover, at least 3 cubic feet in volume, shall be placed at each weep hole. Filter material shall be #3 FINE or approved equal.

Stones for the top course shall be wide enough to cover the top of the wall with the top face practically flat, and shall be set in full mortar bed.

After the stones are placed, loose stones shall be removed and replaced solidly and the faces shall be washed clean of loose mortar. The joints shall be cleaned of all mortar to a depth of 1-inch, wetted, and pointed with Portland cement mortar mixed in the proportions of one part cement to one part fine aggregate or beach sand by volume. The pointed masonry shall be kept moist for a minimum period of 24 hours.

Mortar coping shall be placed atop the wall to the dimensions as shown on the plans. Coping shall be of 1:3 mix.

Mortar smears and drippings shall be completely removed from all exposed surfaces of the stones, and from surrounding work and area.

D. Payment. Payment for STONE MASONRY (1) will be made at the Unit Price Bid or the Lump Sum Bid, whichever is specified, or (2) will not be made directly but shall be included in the lump sum payment of which it is a part. In either case, such payment shall represent full compensation for furnishing all materials, labor, tools, equipment and incidentals required to complete the work.

303.15 CONCRETE ROOFING TILE.

A. Description. This item of work shall include the furnishing of all labor, materials, tools, equipment and incidentals required to complete all concrete roofing tile work as indicated on the plans and as specified in these Standards.

B. Material. The roofing tile shall be Monier Monray Concrete Tile as manufactured in Hawaii by Monocrete Pty. Limited, 91-185 Kalaeloa Boulevard, Campbell Industrial Park, Kapolei, Oahu, or approved equal. The entire installation shall be in strict accordance with the recommendations of the roofing tile manufacturer, and as specified in these Standards.

C. Color Selection. Color shall be as selected by the Manager from the full line of standard palette and samples furnished by the manufacturer.

D. Installation. Installation shall be as follows:

1. Install 2"x 3" wolmanized nailing strips, properly spaced for full tiling, securely attached to substrate with "ramset" anchors. The stripping shall be in lengths not over 8 feet with approximately 3/8 inch separation between ends, the separation being aligned along slope of roof.

2. Install roofing tiles and paper, including hip and ridge pieces, using recommended size copper nails.

E. Warranty. A 5-year (minimum) warranty for material from the manufacturer shall be provided.

F. Payment. No separate payment for CONCRETE ROOFING TILE will be made; the compensation for such work shall be deemed to be included in the Lump Sum Bid for the item of which it is a part.

303.l6 BUILT-UP ROOFING.

A. Description. This work shall consist of furnishing all labor, materials, tools, equipment and incidentals required for the complete installation of built-up roofing where indicated on the plans and as specified in these Standards.

B. Work Specified in Other Sections. Furnishing and installation of metal flashing shall be accomplished under Section 303.22 - MISCELLANEOUS IRON AND METAL WORK, but installation shall be coordinated with this section.

C. Guarantee. The Contractor shall furnish to the Department a written guarantee that all work under this section shall be guaranteed watertight for five (5) years after acceptance of the building by the Manager.

D. Products. Based on products of Siplast, Inc., for a roofing system on a non-nailable deck. Products of other manufacturers may be used subject to prior approval by the Manager.

1. Roofing System. Shall be Siplast Paradiene 20/30 FR, Specification 2030 CPH or approved equal.

2. Summary of Materials Per 100 Sq. Ft.

Asphalt Primer ..... 1 gal.

Paravent ..... 26 lbs.

Asphalt ..... 25 lbs.

Paradiene 20(FR) ..... 58 lbs.

Asphalt ..... 25 lbs.

Paradiene 30FR (White) ..... 85 lbs.

3. Asphalt Primer shall comply with ASTM D41.

4. Asphalt shall comply with ASTM D312, Type IV.

5. Flashing shall be copper clad Siplast Veral or approved equal, installed in accordance with material manufacturers' recommendations.

6. Traffic Pads shall be Siplast Trafbloc or approved equal, 310 mils thick, installed in accordance with material manufacturers' recommendations.

7. Roofing Vents shall be manufactured plastic assembly at least 6 inches high with minimum 2-inch base diameter vent stack and 10-inch diameter base flange. Roofing vent shall be FP-10 one-way Roof Vent by Manville, or approved equal. Vents shall be installed one per 100 squares.

8. Cant Strips shall be fabricated from fiberglass or perlite based materials.

E. Inspection of Surfaces. The Contractor shall inspect all surfaces to receive roofing to see if roof sheathing is smooth, firm, dry and free from unnecessary holes; vent pipes are extended through and all flashing is in position. All defects shall be corrected prior to commencement of work.

F. Manufacturer Representative. Contractor shall be responsible to assure the presence of a qualified representative of the material manufacturer at the job site prior to start of each phase of the work and as required while the work is in progress to offer assistance and physical demonstration on use of the materials and to assist the Contractor in methods or techniques required to accomplish all work as specified.

G. Application.

1. Apply primer to the surface of the entire deck at the rate of 1 gallon per 100 square feet. The primer should be allowed to dry before application of the roofing. Lay 1 ply of Paravent dry, with side and end laps a maximum of 1 inch.

2. Beginning at the low point of the roof, lay 1 ply of Paradiene 20 to the Paravent surface, lapping sides and ends a minimum of 3 inches.

3. Beginning again at the low point of the roof, fully mop 1 ply of Paradiene 30 to the Paradiene 20 surface, lapping sides and ends a minimum of 3 inches. Stagger laps between plies.

H. Payment. Unless otherwise specified, no separate payment for BUILT-UP ROOFING work will be made; the compensation for such work shall be deemed to be included in the Unit Price Bid or Lump Sum Bid, whichever is specified, for the item of which it is a part.

303.17 METAL ROOFING AND SIDING.

A. General. This work shall consist of furnishing all labor, material, tools, equipment and incidentals required for the complete installation of metal roofing where indicated on the plans and as specified in these Standards.

B. Coordination. Coordinate the installation of metal roofing work with other related work described elsewhere and as indicated on the plans.

C. Submittals. The Contractor shall submit the following:

1. Samples: Furnish samples of all materials to be used to the Manager for approval.

2. Shop Drawings: Shop drawings showing complete arrangements and details shall be prepared in accordance with the contract plans and six (6) copies of such drawings shall be submitted to the Manager for approval. Shop drawings shall include a reference to the sheet and detail of the plans which they depict. No fabrication shall be done prior to this approval.

3. Catalog cuts, information and installation procedures.

D. Guarantee. The Contractor shall furnish to the Department a written guarantee on the roofing, flashing and caulking of flashing for a five-year period after final acceptance by the Manager. The guarantee shall provide for repairs of roofing, and flashing where leaking occurs due to faulty materials and workmanship, and for repair or replacement of damage to the building and its finishes resulting from such leaks in the roofing, and flashing systems, all at no cost to the Department.

E. Materials shall be as follows:

1. Metal roofing/siding shall be aluminum with minimum thickness of 0.032-inch (uncoated) and shall be fabricated from 0.04-inch stucco aluminum sheets with Kynar coating as approved by the Manager.

2. Sheet Metal Accessories: Of same material and finish as used for adjacent wall or roof covering, except as specified otherwise in these Standards:

    a. Caps, Strips and Plates: Ridge caps, eave and edge strips, fascia strips, miscellaneous flashing and miscellaneous sheet metal accessories, unless specified otherwise in these Standards, shall be formed from the same material and gauge as the roof covering. Wall plates, base angles or base channels and other miscellaneous framing members may be standard structural steel shapes, or they may be formed from galvanized steel not lighter than 18 gauge.

    b. Continuous Gravity (Ridge) Roof Ventilators: Ventilators shall be provided complete with exterior wind band, integral rain cone, braces, chain-operated dampers and bird screening. The ventilators shall be provided in sections 8 or 10-feet long, and shall be braced at 4 or 5-foot intervals. Ventilators shall be fabricated from Kynar finished aluminum with a thickness sufficient to provide the necessary rigidity to insure smooth operation. The sections shall be formed in a manner which will assure weathertightness. Where intermittent installations are indicated, end closures for each section shall be provided. Throat size (cent opening) shall be 12-inches. Ventilators shall be screened with 3 by 3 mesh per square inch woven aluminum or stainless steel wire bird screening.

3. Fasteners: Fasteners for attachment to structural supports and fasteners for attachment to adjoining sheets or panels shall be as approved, and in accordance with the manufacturer's recommendations. Unless specified otherwise in these Standards, the fasteners shall be either self-tapping screws, bolts and nuts, self-locking rivets, self-locking bolts, end-welded studs, bolted or riveted studs, or step rivets held by aluminum straps. Other types of fasteners of the building manufacturer's standard type, may be used if prior approval is obtained. The fastening system shall be designed to withstand the design loads per specifications. Fasteners shall be stainless steel, or aluminum. All fasteners, with the exceptions of those having integral hex washer heads and fasteners having aluminum drive caps shall have polychloroprene washers. Side laps of roofing sheets or panels having configurations ¾-inch deep or less shall be fastened at a maximum spacing of 12 inches on centers. Heads of screws or bolts exposed on exterior face of factory-finished wall coverings shall be nylon headed to match color of coverings.

4. Gutters and Downspouts: Aluminum material roll formed in 20-foot lengths coated with Kynar material.

5. Sealants:

    a. Sheet sealant shall be an isobutylene tri-polymer tape material suitable for a useful life of twenty years.

    b. Closure for corrugations shall be a one-inch wide closed cell EPDM foam which is shaped to match the sheet corrugations.

    c. Touch Up Kits: Provide 4 one-quart containers of touch up material for the panel finish. Deliver the containers to the Department. Material damaged during construction will be replaced with new material, not touched up by the Contractor.

F. Installation and Workmanship. Work shall be performed in accordance with approved commercial practices by skilled workmen to insure weathertightness. Installation and workmanship shall comply with the following:

1. Wall Construction: All panels shall be applied with the configurations in a vertical position. Panels shall be supplied in wall heights as noted in the drawings with no horizontal joints except at the junctions of door frames. All side and end laps shall be sealed with the joint sealing material specified hereinbefore. All walls shall be flashed and/or sealed at the base, at the top, and around door frames. The placement of closure strips, flashing and sealing material shall be accomplished in an approved manner that will assure complete weathertightness. Flashing will not be required where approved "self-flashing" sheets or panels are used. Minimum end laps for all types of panels shall be 2-1/2 inches. Minimum side laps for all types of panels shall be one corrugation or one configuration.

2. Roof Construction: All roofing panels shall be applied with the corrugations parallel to the slope of the roof. The roofing panels shall be supplied in the longest lengths obtainable with end laps occurring only at structural members with no transverse joints except at the junction of ventilators. All side laps shall be laid away from the prevailing wind, and all side and end laps shall be sealed with the joint sealing material specified hereinbefore. The roof shall be flashed and sealed at the ridge, at eaves and rakes, at projections through the roof, and elsewhere as necessary. The placement of closure strips, flashing and sealing material shall be accomplished in an approved manner that will assure complete weathertightness. Minimum side lap shall be one corrugation, configuration, or interlocking rib. End laps shall be not less than 8 inches, and shall occur only over purlins.

G. Dissimilar Materials. Where aluminum surfaces come in contact with ferrous metal or other incompatible metals, the aluminum surfaces shall be kept from direct contact by one of the following methods.

1. Painting the incompatible metal with a coating of heavy-bodied bituminous paint conforming to Federal Specification TT-C-520.

2. An approved non-absorptive gasket.

3. An approved caulking placed between the aluminum and the incompatible metal.

H. Finish Coating for Metal Roofing and Siding. Sheets shall be factory finished with a polyvinyllidene fluoride polymer modified with resins to improve its fade and chalk resistance. Color shall be selected by the Manager from the manufacturer's standard colors. The coating system shall be based on the material having the proprietary name Kynar and shall be warranted in writing by the manufacturer for 20 years from the date the structure is placed in service. Coating shall withstand 1,000 hours of salt spray test in accordance with ASTM B 117 with no more than 10% of No. 8 blisters. The coating shall be the most corrosion resistant coating available from a metal building manufacturer.

Factory Finishing: Exterior and interior exposed surfaces of metal roof and wall panels, roof ventilators and metal accessories shall be provided with a factory-applied finish. The finish shall consist of Kynar fluoropolymer as specified above.

Shop Painting: All ferrous metal work, except factory-finished work, zinc-coated work, and work specified to be painted, shall be (1) cleaned of all dirt, rust, scale, loose particles, grease, oil and other deleterious substances; (2) chemically treated with a phosphoric type cleaner; and (3) then be given one coat of an approved rust-inhibiting primer paint of the type as specified under Section 303.27 - PAINTING.

I. Clean Up. During the process of the work, the premises shall be kept reasonably free of all debris and waste materials resulting from the work under this section. All such debris and rubbish shall be removed from the site.

Clean residue from drilling immediately after holes are drilled in roofing. Remove all metal shavings and other injurious material from the roof surface.

J. Payment. Unless otherwise specified, no separate payment for METAL ROOFING AND SIDING WORK will be made; the compensation for such work shall be deemed to be included in the Unit Price Bid or Lump Sum Bid, whichever is specified, for the item of which it is a part.

303.18 QUARRY TILE WORK.

A. Description. This item of work consists of furnishing all labor, material, tools, equipment and incidentals required to complete all tile work as indicated on the plans and as specified in these Standards.

B. Materials shall comply with the following:

1. Quarry Tile: Standard 6"x6"x½" V-Bak floor tile, trim and shapes as manufactured by American Olean Tile Company (Murray Tile), Summitville Tiles Inc., or approved equal. Contractor shall furnish samples of the material to be used for the Manager's approval.

   Color shall be as selected by the Manager.

2. Base Tile Adhesive: Miracle Ceramic Floor Tile adhesive MA500, as manufactured by Miracle Adhesive Corp., or approved equal.

3. Setting Bed for Quarry Tile: One part Portland cement to five parts beach sand, and 1/10 part by volume hydrated lime.

4. Floor Tile Grout: "Hydroment" as manufactured by the Upco Company, 4805 Lexington Avenue, Cleveland, Ohio, or approval equal. Color Gray.

5. Water: Potable, clean, free from injurious amounts of oil, soluble salts, chemicals and other deleterious substances.

C. Application. Install all quarry tile conforming to ANSI Specifications A-108.3, and in accordance with recommendations of tile manufacturer and as specified below:

1. Base Tiles: Install all base cove tiles, using adhesive in a straight and true line before installing floor tiles.

2. Setting: Place mortar for setting bed in thickness of 3/4-inch minimum and slope to floor drains. Trowel neat cement paste over the bed in 1/32-inch to 1/16-inch thickness. Before the bed has attained its initial set, install tile. Firmly press and tap each tile into place and carefully align to obtain the joint width, 1/4 inch.

3. Pointing: After setting the tile, point joints with grout by troweling or some suitable method the same day the tile is set. Damp cure installation for at least three (3) days.

D. Finishing. After cleaning, when dry, apply to quarry tile one coat of Hillyard TeraSeal in accordance with manufacturer's directions.

E. Removal of Condemned Tile. Prior to the final acceptance of tile work, remove and replace at own expense all condemned tiles or tiles that ring hollow.

F. Expansion Joint Sealant. Caulking under Section 303.21 - CAULKING applies to all mastic joints in quarry tile floor as required.

G. Cleaning. Upon completion of the various portions of this work, remove all unused materials, rubbish, etc., that have accumulated as a result of work. After the pointing has sufficiently set or hardened, clean all tiles on floors and bases using approved materials and procedures.

Remove completely all traces of cement or dust accumulations.

H. Protection. Close rooms and spaces to traffic in which tile work is being installed, until the tile has set. Protect tile work from damage at all times. Keep all tiles dry while in packages.

I. Payment. No separate payment for QUARRY TILE WORK will be made; the compensation for such work shall be deemed to be included in the Lump Sum Bid for the item of which it is a part.

303.19 CARPENTRY AND MILLWORK.

A. Description. This item of work shall include the furnishing of all labor, materials, tools, equipment and incidentals required to install all rough and finish carpentry as indicated on the plans and as specified in these Standards.

B. Materials shall comply with the following:

1. All materials shall be new, dry, sound, undamaged, true to grade specified, well seasoned, free from defects which may impair its strength or durability. All lumber except redwood shall be treated as specified hereinafter.

2. Nailers, Battens, Concealed Framing and Headers: Construction Grade Douglas Fir, S4S, wolmanized.

3. Plywood: Wolmanized Douglas Fir, exterior grade, DFPA, A-C, or better.

4. Wood Trim: "B" and better, Douglas Fir and Mahogany where indicated, kiln dried, vertical grain, S4S, Wolmanized Douglas Fir and Penta dip mahogany.

5. Particle Board: Wolmanized Duraflake, or approved equal.

6. Peg Board: Tempered Masonite, standard perforations.

7. Plastic Laminate: 1/16-inch thick high pressure laminated plastic, Formica or approved equal, in color and pattern as selected by the Manager. Adhesive shall be as specifically manufactured for application of plastic laminate.

8. Rough Hardware: Nails, screws, bolts, etc., shall be domestic grade, hot-dip galvanized.

C. Wood Preservative and Termite Treatment shall comply with the following:

1. Wood Preservation with Wolman Salts or Osmosalts: All concealed framing lumber, blocking, furring strips, nailer, and other general use lumber that will be concealed in the finished work shall be treated by a pressure method with 0.75#/C.F. Wolman Salts (FCAP-B) or 0.4#/C.F. Osmosalts (FCAP-B) and shall be dried to 19% moisture content on 1-inch and 2-inch lumber after treatment in accordance with American Wood Preservers Institute Standard LP-2, as revised.

2. Water Repellent Penta-Dip Treatment: All finish lumber under 2-inch nominal thickness such as millwork items and similar wood work that will be exposed to view in the finished work shall be immersion treated with water repellent penta preservative solution according to U.S. Commercial Standard CS 262-63 for a minimum of thirty (30) minutes.

3. All wood dip treated with Penta shall be kiln dried before treatments to an average of 12% to 15% moisture content.

4. All wood shall be treated as above, except masonite.

5. Lumber shall be milled to finish size and shape prior to treating, and it shall be treated before assembly.

6. Wherever it is necessary to cut treated wood on the job, all cuts shall be given a thorough coating of the concentrated preservative used in the original treatment.

7. Inspection, Labeling, and Certificate: Each piece of pressure treated lumber and plywood shall be permanently labeled on the face with the Quality Control mark of the American Wood Preservers Institute showing compliance with AWPI Standard LP-2 in the case of Wolman Salts or Osmosalts, and AWPI LP-3 in the case of penta treatment.

   In addition, a Certificate of Treatment shall be issued to the Manager showing compliance with these specifications, both as to kiln drying and penta treatments.

8. All wood to be buried in concrete or placed in contact with soil or other moisture laden material shall be pressure treated with chromated copper "GREEN SALT" solution with 0.75 lb. of dry salt per cubic foot of wood retention or Osmose K-33 solution with 0.4 lb. of dry salt per cubic foot of wood retention.

D. Additional Requirements.

1. Dampproofing: Apply a continuous strip of 40 pound asphalt saturated felt under wood members bearing on masonry.

2. Millwork and Cabinet Work: Millwork shall be fabricated at the mill in accordance with detailed drawings, in as large unit as practicable for shipment and introduction into permanent position, and in an orderly arrangement for neat and rigid field assembly. All units when erected in place shall be straight, square, plumb, level and free from damage and tool marks, and all units shall be belt-sanded at mill and hand-sanded smooth immediately following installation in place. All joints shall be made up with waterproof glue and nail or screw. Nails and screws shall be placed in concealed surface to the maximum extent possible. Submit six (6) sets of detailed shop drawings based on field dimensions to the Manager for approval prior to fabrication.

3. Protection of Work in Place: Protect finish millwork from being defaced or marred by workmen during execution of other trades. Replace any damaged work with new work.

4. Priming and Backpainting: Prime and backpaint concealed areas of all woodwork before installation.

5. Finish Hardware: All items specified under Section 303.24 - FINISH HARDWARE shall be carefully fitted and installed in accordance with the manufacturer's directions and shall be adjusted for perfect working order to the satisfaction of the Manager with further adjustment if necessary within one year after acceptance of the project.

6. Acoustic Tile Nailing Strips: Furnish and install nailing strips as indicated on the plans and as specified under Section 303.25 - ACOUSTIC TILE.

   Nailing strips shall be 1"x3" softwood (treated) 12 inch on center securely fastened to the concrete surfaces. Layout need not be in grid but shall have cross strip fire blocking not over 8 inch on center.

   Edge strips shall be as detailed.

7. Roof Battens: Furnish and install battens as indicated on the plans and specified under ROOFING.

8. Waterproof Coating: All lumber and woodwork exposed to weather shall be coated as specified elsewhere in these Standards.

E. Payment. No separate payment for CARPENTRY AND MILLWORK will be made; the compensation for such work shall be deemed to be included in the Unit Price Bid or Lump Sum Bid, whichever is specified, for the item of which it is a part.

303.20 DRYWALL CONSTRUCTION.

A. Description. This item of work shall include furnishing all labor, materials, tools, equipment and incidentals required to install all drywall work indicated on the plans and as specified in these Standards.

B. Materials shall comply with the following:

1. Studs, blocking, runners and furring strips: Minimum 0.02-inch thickness electro galvanized steel with hemmed edges. Studs shall be of the sizes indicated on the plans and checked and certified by the manufacturer to be of ample strength for the partition height required.

2. Screws: U.S. Gypsum Co. or approved equal, drywall screws, types and lengths as required.

3. Gypsum Wall Board: 5/8-inch thick, fire rated, 48 inches wide by length sufficient to eliminate end joints up to 10 feet long maximum, with long edges tapered, conforming to ASTM C36, "Standard Specification for Gypsum Wall Board." Wall board installed shall be water-resistant type, conforming to ASTM C630, "Standard Specification for Water Resistant Gypsum Backing Board".

4. Accessories: External corners and edging of either hot-dip galvanized steel or aluminum, whichever is standard with the manufacturer of system used. Bent, rusty or corroded materials are not acceptable and must be removed at any stage of the work.

C. Manufacturer. Complete partition assembly shall be as supplied by U.S. Gypsum, National Gypsum, Kaiser, Blue Diamond Division Wall System manufactured by Flintkote or approved equal and meet the following requirements:

1. Fire Rating: Partitions shall be rated 1 hour incombustible when tested in accordance with ASTM E119, "Standard Methods of Fire Tests of Building Construction and Materials".

D. Samples. Furnish samples of studs, runners, furring strips, seal strip, screws, plasterboard, tape for joints, edge and corner beads to the Manager for approval before commencing the work.

E. Installation. Partitions, ceiling, and furring shall be installed in strict accordance with the specifications of the manufacturer of the materials used and as specified below:

1. Runner: Install ceiling runners and wall framing as shown. Runners shall be fastened not over 24 inches o.c. in the manner recommended by the particular manufacturer or as indicated.

2. Studs and Furring Channels: Install 16 inch on center. Furring channels shall be anchored to backing with manufacturer's fixing devices. Double studs at jambs of all openings and attach frames as detailed.

3. Wall Board: Apply wall board, stagger joints. Screw to studs at 12 inches on center.

4. Fastening of Wall Board to studs shall be by U.S.G. Drywall Screws, or approved equal, type S power-driven and spaced as per manufacturer's instructions.

5. Joints on opposite face of partitions shall be so arranged as to occur on different studs.

6. All joints, screw head and other depressions in the surface of the wall board shall be treated in accordance with the recommended manner with PERF-A-TAPE Joint System or approved equal.

7. All internal and external angles formed by the intersection of either wall board surfaces or other surfaces shall be treated with metal trim and/or PERF-A-TAPE Joint System or approved equal as indicated or required.

8. All vertical or horizontal external corners shall have PERF-A-BEAD Corner Reinforcement or approved equal applied in accordance with manufacturer's directions.

9. Cooperate with other trades in the placing of and blocking required as backing for all accessories.

10. Apply Gypsum board for ceiling with long dimension at right angles to joints where practical. Center end joints over joint. Use maximum practical length to minimize joints. Provide suitable metal edge trim at ceiling angles and around ceiling cutouts.

F. Payment. No separate payment for DRYWALL CONSTRUCTION will be made; the compensation for such work shall be deemed to be included in the Lump Sum Bid for the facility of which it is a part.

303.21 CAULKING.

A. Description. This item of work shall include the furnishing of all labor, materials, tools, equipment and incidentals required to install the polysulfide caulking throughout the structure. The work of this section shall be coordinated with the work of the various trade sections requiring caulking and all applicable requirements of this section shall be considered to be included as a part of each section requiring caulking.

B. Materials. Materials shall be new and shall be manufactured by the same manufacturer and of type most suited for the particular caulking requirement. Deliver, store and handle materials to prevent inclusion of foreign matter or damage of materials. Materials shall be in original package unit ready to use.

1. Polysulfide Caulking. Caulking shall be based on polysulfide liquid polymer manufactured by Thiokol Chemical Corporation, or approved equal and shall conform to Thiokol Building Trade Performance Specifications for two-component sealants. Caulking shall be delivered to the site in sealed containers, each bearing a "Tested and Approved" seal, manufacturer's name, and product designation.

The caulking materials used in horizontal locations shall be Class "A" (self-leveling or pourable), and caulking material used in vertical and overhead locations shall be Class "B" (non-sag). Type II sealants shall be used for joints in floors and walls and other traffic areas. Type I sealants shall be used in all other areas.

2. Color. As required to match adjacent materials, as selected or approved by the Manager.

3. Primer. Primer shall be a quick drying clear sealer of the one-part elastomeric type, the cure to occur by solvent evaporation to a smooth, amber, clean film. Primer must be water resistant and shall be of a type recommended by the sealant manufacturer.

4. Resilient Joint Backing. At joints to be caulked, backing shall be polyester polyurethane foam at least twice as wide as joints to be caulked.

C. Application

1. Joint Preparation. Joint preparation shall conform with the following:

a. Joints shall be backfilled to the required depth with a polyester polyurethane foam joint backing.

b. For polysulfide caulking, the minimum joint depth shall be ¼-inch for metal work and ½-inch for concrete and masonry work. The gap width shall not exceed the depth. The average width for metal-to-metal joint work is 1/8-inch and ¼-inch for others.

2. Caulking. Polysulfide caulking shall be applied to a clean, dry surface free from grease, oil, wax or other foreign matter that tends to destroy or impair adhesion. Cleaning shall be in accordance with instructions of the sealant manufacturer.

a. Nonporous surfaces, such as metal, shall be cleaned with an oil-free cleaner such as Methyl Ethyl Ketone, Toluene or standard solvent. Surfaces shall be wiped dry with a clean cloth before the solvent evaporates.

b. Porous surfaces, such as masonry, concrete or plaster shall be cleaned and given a prime coat to a depth of at least ¾-inch in the joint to be caulked which shall be allowed to dry before application of polysulfide caulking.

c. Employ thoroughly skilled and experienced workmen and apply in strict conformance with manufacturer's directions.

d. Do not caulk joints until they are in compliance with details indicated on the plans.

e. Sealant bonding surfaces shall be clean, sound, dry, and free of contamination of laitance, form release agents, concrete curing compound or other surface treatment.

f. Mask areas adjacent to joints if necessary to obtain a neat sealer line.

g. Apply by hand gun or pressure equipment following the manufacturer's written instructions. If necessary, tool joint within ten minutes of application and prevent movement of joint for 48 hours to allow for cure.

D. Cleaning. Clean excess sealant off non-porous surfaces while in uncured state with a commercial solvent such as xylol. On porous surfaces, allow excess sealant to cure and then remove by abrasion or chemical means.

E. Payment. No separate payment for CAULKING will be made; the compensation for such work shall be deemed to be included in the Unit Price Bid or Lump Sum Bid, whichever is specified, for the item of which it is a part.

303.22 MISCELLANEOUS IRON AND METAL WORK.

A. Description. Miscellaneous iron and metal work shall include the furnishing of all labor, materials, tools, equipment and incidentals required for installation of interior access ladder, metal frames and covers, louvers and other miscellaneous iron and metal items required to complete the reservoir or other structures in accordance with the details as shown on the plans and as specified in these Standards.

B. Verifying Conditions. The Contractor shall verify measurements in field, as required, for work fabricated to fit job conditions. Before starting, the Contractor shall examine adjoining work and perform necessary corrective action to insure perfect workmanship and fit of this work in all respects.

C. Shop Drawings. Submit minimum six (6) copies of detailed shop drawings to the Manager for approval of all miscellaneous items. Obtain approval of drawings prior to proceeding with manufacturing. Shop drawings shall show fabrication, assembly, and erection details, sizes of all members, all dimensions, fastenings, supports and anchors, clearances, size and lengths of welds, and all necessary connections to work of other trades. Drawings from brochures or reproductions of brochures shall not be acceptable.

D. Steel.

1. Materials. Materials shall be new and free from defects impairing strength, durability or appearance. Materials shall be of best commercial quality for purposes specified, and shall comply with the requirements of ASTM A36, "Standard Specification for Structural Steel" or ASTM A588, whichever is shown on the drawing or specified in the Special Provisions.

2. Workmanship shall conform to the following:

a. Metal surfaces shall be clean and free from mill scale, flake rust and rust pittings, well formed and finished to shape and size, with sharp lines and angles and smooth surfaces. Shearing and punching shall leave clean true lines and surfaces.

b. Surface preparation shall be in strict conformance with the paint manufacturer's specifications.

c. All miscellaneous metal items mentioned herein or required by the plans shall be fabricated of shapes as detailed or required. All connections, unless noted otherwise, shall be welded, with all welds ground smooth. All items shall be hot-dipped galvanized after fabrication.

3. Metal Frames and Covers. Metal frame and cover for reservoir access manhole and overflow hatch shall be fabricated and installed as shown on the plans. Metal frames and covers shall be hot-dipped galvanized *(For Maui only: Metal frames and covers shall be aluminum or stainless steel.)* Frame and cover shall be cleaned and shop coated and painted as specified elsewhere in these Standards. Frames and covers shall be designed to meet confined space requirement.

E. Aluminum.

1. Materials. Materials shall be new and free from defects impairing strength, durability, or appearance. Materials shall be of best commercial quality for purposes specified, and shall comply with the requirements of ASTM B209, "Standard Specification for Aluminum-Alloy Sheet and Plate".

2. Fabrication, Installation and Workmanship. Except as otherwise indicated, the fabrication, installation procedures and workmanship shall conform to the standard details and recommendations of the "Architectural Metal Handbook," latest edition as published by the National Association of Architectural Metal Manufacturers. All work shall be done in a first-class workmanlike manner by mechanics skilled in the trade and under proper supervision of the Contractor. All welding shall be done by the inert-gas arc welding method as specified in the latest edition of Alcoa "Welding Alcoa Aluminum." Welding rods shall be an alloy which will not alter the color of the aluminum during the anodizing process.

3. Dissimilar Materials. Aluminum surfaces shall be kept free from direct contact with metals other than stainless steel, zinc or other metals compatible with aluminum by: (1) painting the dissimilar metal with either a primer coat of zinc chromate primer followed by two coats of aluminum metal-and-masonry paint; or (2) painting the dissimilar metal with a coating of heavy-bodied bituminous paint; or (3) applying caulking compound or non-absorptive tape or gaskets between the aluminum and dissimilar metal. Steel anchors and connecting members shall be hot-dip galvanized after fabrication.

Aluminum surfaces in contact with lime mortar, concrete or other masonry materials shall be painted with alkali-resistant coating, such as heavy-bodied bituminous paint or water-white methacrylate lacquer.

Aluminum in contact with wood or other absorptive materials which may become repeatedly wet shall be painted with two coats of aluminum metal-and-masonry paint or a coat of heavy-bodied bituminous paint. Dissimilar metals shall be painted if used in locations where drainage from them passes over aluminum.

4. Finish. Present certification of anodized and other finishes as called for in item finishes. All aluminum surface finishes, unless specifically specified shall be AA-M21-C21-A41 or AA-M21-C21-A4X.

5. Expansion and Contraction. Aluminum work shall be designed and anchored so that the work will not be distorted nor the fasteners overstressed from the expansion and contraction of the metal.

6. Temporary Protection. Aluminum surfaces requiring protection against lime mortar stains, discoloration, surface abrasion, and other construction abuses shall be suitably protected in accordance with Alcoa Publication "Care of Architectural Aluminum During Construction."

F. Copper.

1. Materials. All materials shall be stored in such a manner as to afford adequate protection. Damaged materials shall not be used and shall be removed from the site. Samples shall be submitted for approval and used as a standard for the duration of the project. All materials shall comply with the following:

a. All sheet copper shall be 16 oz. cold rolled unless otherwise specified.

b. Flux shall be compatible with the solder and shall be non-corrosive type.

c. Plastic cement shall conform to Federal Specifications SS-CC-153, Type I.

d. Nails shall be copper or brass.

2. Fabrication, Installation and Workmanship. Except as otherwise indicated, the fabrication and installation procedures shall conform to the standard details and recommendations of the Architectural Sheet Metal Manual, latest edition as published by the Sheet Metal and Air Conditioning Contractors National Association, Inc. All work shall be done in a first-class workmanlike manner by mechanics skilled in the trade, under proper supervision of the Contractor and shall comply with the following:

a. Contractor shall examine all surfaces to be covered with sheet copper or areas where sheet copper is to be installed and shall report to the General Contractor, any improper or defective base or work for the Contractor's work. In the absence of such written report, the Contractor shall be held responsible for the finished job.

b. Detailed shop drawings showing complete arrangements and details shall be prepared in accordance with field dimensions and the contract plans and six (6) copies of such drawings shall be submitted to the Manager for approval. Shop drawings shall include a reference to the sheet and detail of the plans which they depict. <u>No fabrication shall be done prior to this approval</u>.

c. Cap flashing and scuppers shall be fabricated in accordance with approved shop drawings; in long lengths and delivered to the job in a neat, clean condition and installed in cooperation with the roofing Contractor. Cap flashing shall comply with the following:

i. Cap flashings shall be fabricated in 8 to 10-foot lengths, except when shorter pieces are required; miter lap end joints 5-inches; do not solder joints. Edge strip shall be continuous, nailed at 10 inches on center (maximum).

ii. Seal all joints in cap flashing with an approved sealant to make a continuous watertight cover.

d. All sheet copper shall be so formed, fabricated and erected as to adequately provide for all possible expansion and contraction in the completed work, and all work shall be finished so that it is weatherproof and watertight. All work to be accurately formed as to sizes, shapes and dimensions with all lines and angles in true alignment, straight, sharp and erected plumb, level and in proper plane without bulges or waves. Intersections shall be coped or flanged to fit accurately and to be securely soldered or welded. Nails, screws and bolts shall be of type best suited for the intended purpose, and shall be of a composition that will not support galvanic action after installation. Where galvanic action may occur, dissimilar material shall be completely coated with an approved bitumastic paint or otherwise protected against galvanic action.

G. Interior Access Ladder. The interior access ladder shall be fabricated and installed as shown on the plans. Interior access ladder shall be of Type 316 stainless steel standard tubing and fittings. All connections shall be welded and ground smooth. All welds shall be compatible with Type 316 stainless steel. All straps, anchors and bolts shall be of Type 316 stainless steel.

H. Exterior Access Ladder. The exterior access ladder shall be fabricated and installed as shown on the plans. All connections shall be welded and ground smooth. Exterior access ladder shall comply with applicable OSHA requirements. Ladder shall be fabricated and installed as shown on the plans. *(For Reservoirs on Oahu Only: Install two pool type grab bars on top of the reservoir near the access manhole to accommodate portable ladders and provide a minimum of 8 feet long guardrails on both sides of the grab bars.)*

I. Reservoir Ventilator Louvers. Furnish and install where shown on the plans, extruded aluminum houses by Penn Ventilator Co., Inc., Philadelphia, PA 19140 or approved equal. Ventilator houses shall comply with the following:

1. Pennhouse Ventilator shall have heavy gauge extruded aluminum blades of stormproof style with corners mitered and Heliarc welded.

2. The following accessories shall be included:

   a. All-weather shield.

   b. Hinged Roof.

c. Bird and insect screen formed from aluminum expanded metal and 18 x 14 mesh aluminum wire.

3. Air filter shall meet standard Air Filter Institute test on 20"x20" panels 1" thick:

a.	Pad porosity	= 10 pores/lin. inch
b.	Resistance to 800 CFM air	= 0.08 inch of water
c.	Average efficiency	= 63%
d.	Dust capacity at 0.5 inch water resistance	= 364 grams

4. Filter foam - Dry 10 P.P.I. – 1-inch thick.

J. Payment. No separate payment for MISCELLANEOUS IRON AND METAL WORK will be made; the compensation for such work shall be deemed to be included in the Unit Price Bid or Lump Sum Bid, whichever is specified, for the item of which it is a part.

303.23 DOORS AND FRAMES.

A. Description. This item of work shall include the furnishing of all labor, materials, tools, equipment and incidentals required for the installation of doors and frames, including seals, as indicated on the plans and as specified in these Standards.

B. Shop Drawings. Submit minimum six (6) copies of detailed layout shop drawings based on field dimensions to the Manager for approval prior to fabrication. Drawings from brochure or reproduction of brochures shall not be acceptable. Shop drawings shall show fabrication, assembly and erection details, all dimensions, sizes of all members, type of fastening, supports and anchor clearances, size and length of welds and all necessary connection to work of other trades.

C. Coordination. Coordinate installation of doors with other related work described elsewhere and as indicated on the plans.

D. Hollow Metal Doors and Frames.

1. General. Doors shall be 1-3/4-inch thick, flush panel, hollow metal with mineral wool core, sound-deadened, seamless, and designed for use with standard builders hardware. All materials used in the fabricating of pressed steel frames and doors shall be free from defects impairing their strength, durability or appearance. Doors and frames shall conform to Commercial Standard PS4-66 and all subsequent amendments.

2. Materials and Minimum Requirements: Flush Panel.

a. Galvanized Panels: Door panels and end closures shall be manufactured of 16 gauge hot-dipped galvanized material in the 1.25 coating class conforming to ASTM Designations A-525, "Standard Specification for Steel Sheet, Zinc-Coated (Galvanized) by the Hot-Dip Process, General Requirements" and A526, "Standard Specification for Steel Sheet, Zinc-Coated (Galvanized) by the Hot-Dip Process, Commercial Quality" and Federal Specification QQ-S-775D, Class D (except Marking). The material shall be treated in the mill to insure superior prime paint adhesion. The pretreatment shall conform to Military Specification MIL-C-490, Amendment 1, and Federal Specification TT-C-4900 Grade 1.

b. There shall be no visible seams on the face or vertical edge. Welds 2 inch on centers shall occur around the perimeter of the door. Tops and bottoms of doors shall be completely closed with not less than 18 gauge channels and shall be reinforced with 18 gauge internal vertical stiffeners.

c. Sound deadening shall be secured by bonding a precured structural mineral wool to the panel with a thermosetting adhesive. Rigid core shall be one pound density, odorless, self extinguishing material that is resistant to vermin, fungus, bacteria, moisture, mildew and rot.

<u>No honeycombed core shall be used.</u>

d. Hardware Preparation: Doors shall be mortised, reinforced, drilled and tapped to receive mortise hardware as specified in the hardware schedule. Doors shall be reinforced for specified surface applied hardware; drilling and tapping shall be done in the field. Hinge reinforcing plates shall be No. 6 gauge. Reinforcing for other surface and mortised hardware shall be 14 gauge except for closer reinforcings which shall be 12 gauge. All locks shall have flat faces. All hardware reinforcing plates shall be welded, on all edges, internally.

3. Materials and Minimum Requirements: Frames.

a. Frames shall be fabricated from 14 gauge galvanized steel and shall be combination type with integral top and trim. Head assemblies shall be reinforced internally at each miter joint with 16 gauge channel shaped reinforcements.

b. Multi-Purpose Headers and Jambs: Shall have self-aligning tabs and slots for secure locking and shall be mitered and continuously arc welded on the frame face to form a one-piece, neat mitered corner assembly.

c. Frames shall be anchored with expansion bolts, in jambs and headers at 24 inches on center max.

d. Hardware Preparation: Frames shall be mortised, reinforced, drilled and tapped at the factory to receive full mortised hinges and strikes as specified in the hardware schedule. Strike jambs shall be punched to receive two rubber bumper silencers. Frames shall be reinforced for surface applied hardware. Hinge reinforcing plates shall be No. 6 gauge. Closer reinforcing plate shall be No. 12 gauge. Reinforcing for other surface and mortised hardware shall be No. 14 gauge. All hardware reinforcing plates shall be welded on all edges, internally.

e. Galvanizing: Frame members shall be manufactured of hot-dip galvanized material in the 1.25 oz. coating conforming to ASTM Designations A-525, "Standard Specification for Steel Sheet, Zinc-Coated (Galvanized) by the Hot-Dip Process, General Requirements" and A-526, "Standard Specification for Steel Sheet, Zinc-Coated (Galvanized) by the Hot-Dip Process, Commercial Quality" and Federal Specification QQ-S775D, Type 1, Class D (except marking). The material shall be treated in the mill to insure superior prime paint adhesion. The pretreatment shall conform to Military Specification MIL-C-490, Amendment 1, and Federal Specification TT-C-490, Grade 1.

f. All welds shall be shop welds.

g. Provide angle spreader for frames during shipping, handling and installation.

4. Finish. Both frames and doors shall be cleaned and shop coated and painted as specified in Section 303.27 - PAINTING.

5. Installing Frames. Anchor all frames to wall with expansion bolts at 24 inches on center at each jamb. Where doorframe extends to soffit above, anchor frame to beam with expansion bolts at 24 inches on center. Set frames level and plumb, securely braced, for anchoring to walls. Prior to installation, all frames shall be back painted with heavy bodied bituminous paint.

6. Installing Doors and Hardware. Hang metal doors and install hardware under supervision of hardware supplier's representative. Template shall be furnished by hardware supplier.

Leave all work, including hardware, clean and in perfect working condition.

Entire assembly shall be installed and adjusted by skilled mechanics in strict accordance with "INSTALLATION INSTRUCTIONS" of door manufacturer to achieve, in place, the rated STC capability.

E. Solid Core Flush Panel Doors.

1. Material. Solid Core Flush Panel Doors shall conform to the requirements of Federal Specifications, LLL-D581D and NWMA Industry Standard I.S.1-78. Doors shall be assembled with exterior grade adhesive and shall be Type I (waterproof). Doors shall be treated with a non-staining water repellent preservative. Core shall conform to CS 236-66. Door faces shall be of red lauan (Philippine Mahogany).

Doors shall be provided with louvers for ventilation if called for and shown on the plans.

Frames shall be in full single lengths. Moldings shall be nailed and glued into place with nails set and puttied. Exterior corners shall be lightly rounded.

2. Installation.

a. Install frames plumb, level, and rigidly secured in place properly braced.

b. All doors shall be neatly fitted to the openings and hung to frames with hardware, plumb and square with proper clearance at sides, top, and over threshold, and with all edges of the door slightly beveled with tool and sandpaper. Drips shall be cut.

c. Leave all work, including hardware, clean and in perfect working conditions, to the satisfaction of the Manager.

F. Fiberglass Reinforced Plastic Doors and Frames *(for Hawaii only).*

1. Fiberglass Reinforced Plastic Doors.

a. Door shall be made of fiberglass reinforced plastic (FRP) using resins tailored to a chlorine gas environment and having a fiberglass content of 25 percent by weight as manufactured by Chem-Pruf Door Company. The doors shall be flush construction, having no seams or cracks. All mortises shall be molded in at the factory. The doors shall be 1-3/4-inch thick with a 15-mil (plus or minus 3 mils) color gelcoat and have an R-factor of 12. Secondary painting over pultrusions to achieve color is not acceptable.

b. Door plates shall be molded in one continuous piece, starting with at 15-20 mil gelcoat of the color specified, integrally molded with at least two (2) layers of 1.5 ounce per square foot fiberglass mat and layer of 16 ounce per square yard unidirectional glass roving.

c. Adequate reinforcing and compression members shall be used to accommodate surface hinges, locksets, kickplates, and push or pull plates. When engineering considerations dictate, mild steel is buried in the fiberglass matrix to provide enhanced screw-holding power. In no case should screws be inserted into fiberglass matrix to provide holding for hinges, locks or closures, or any structural attachment. Thru-bolting shall be used for attachment of hinges. A compression member is to be located which will provide memory and resistance to the torquing of thru-bolts.

All voids between the door plates shall be completely filled with the equivalent of 4-6 pounds expanded polyurethane foam, having a flame spread of 25 or less per ASTM E-84. A phenolic-coated kraft honeycomb may be substituted for urethane foam where engineering requirements dictate.

d. All reinforcing resins shall have a flame spread of 25 or less per ASTM E-84 and shall be self-extinguishing per ASTM D-635.

e. The color of the door or frame shall be integrally molded as the part is made. Painting of door will not be allowed. Submit color chart to the Manager for selection of color. Colors on chart shall be limited to those recommended by the manufacturer for exposure to sunlight.

2. Fiberglass Reinforced Plastic Frames.

a. Frames shall be similar to the doors in construction and materials except the frames shall be solid fiberglass. The stop and frame will be molded all in one piece. The frame shall be integrally gelcoated to the customer's color when molded. Mortises will be molded in. It is not permitted to rout in mortises or remove any material from the head or jambs, to provide mortises.

b. Reinforcement for mounting hinges, closers, etc., shall be of mild steel plates strategically located and buried in the resin-glass matrix so they will not be exposed to the elements.

c. The jamb shall be flat on the backside (against the opening) and uniform in thickness so as to provide a solid, uniform surface against the wall opening. No wood blocks or spacers are permitted.

3. Hardware. All hardware (except locksets) shall be installed at the door manufacturing plant. The hardware manufacturer's warranty shall be included with the hardware installation.

4. Installation.

a. Installation shall be in strict compliance with manufacturer's written instructions using non-corrosive materials and methods.

b. Install frames plumb, level, and rigidly secured in place and properly braced.

c. All doors shall be neatly fitted to the openings and hung to frames with hardware, plumb and square with proper clearance at sides, tops, and over threshold.

d. Coordinate with masonry wall construction for frame anchor placement.

e. Maximum diagonal distortion shall not exceed 1/16 inch measured corner to corner.

f. Leave all work, including hardware, clean and in perfect working condition, to the satisfaction of the Manager.

5. Guarantee. Submit to the Manger three (3) copies of a written guarantee for five (5) years against corrosion for door assembly and hardware exposed to the chlorine gas environment.

6. Manufacturer's Data. Submit six (6) copies of the manufacturer's descriptive data to the Manager for each component supplied. Six (6) copies of the manufacturer's color chart shall also be submitted. Color to be selected by the Manager.

G. Payment. Payment for DOORS AND FRAMES will not be made directly, but will be a part of the Unit Price Bid or the Lump Sum Bid, whichever is specified, for the item of which this item is a part.

303.24 FINISH HARDWARE.

A. Description. This item of work shall include furnishing of all materials, labor, tools, equipment and incidentals required to install finish hardware as indicated on the plans and as specified in these Standards.

B. General Requirements.

1. Quality, function and finish shall be as described in the Special Provisions of the project specifications. Other goods equal in all respects to goods specified may be substituted, subject to approval of the Manager upon receipt of samples and supporting data ten (10) days prior to bid opening.

2. Where hardware is attached to concrete or masonry, screw anchors shall be supplied for anchorages.

3. Examine the plans, specifications and details in order to check all items so they will be suitable and of perfect fit and delivered where and when required. Hardware shall be separately unit packed, labeled and numbered so that it can be checked with the hardware list which shall be furnished with the goods when delivered.

4. Hardware shall be procured from a source of supply, approved by the Manager as competent to correctly interpret the plans, details and specifications and to be prepared at all times to promptly and satisfactorily service the hardware on the job. The supplier must be an established contract builders' hardware firm which meets all the above requirements and which maintains and operates an office, display room and stock in the State of Hawaii.

5. The finishes listed are subject to damage if paint, lacquer, abrasives, adhesives or any other foreign substance is used on or allowed to come in contact with the hardware. The Contractor shall see that all finishes are covered and protected until the job is completed. Upon completion of all work, the Contractor will have all protective coverings removed and have all finishes wiped clean with clean, dry rags.

6. No extra cost will be allowed because of changes or corrections necessary to facilitate the proper installation of any hardware. The Contractor shall be responsible for the proper fabrication of all work or material to receive the hardware.

7. The general Contractor shall have a responsible person verify the contents of each delivery of finish hardware prior to its secure storage. The hardware shall be protected from damage at all times, both prior to and after its installation.

8. All tools and maintenance or installation instructions packed with locksets shall be given to the Department when the project is completed.

9. *All locks furnished by the Contractor shall be delivered less cylinders and shall be capable of taking the Sargent Removable Core Cylinder Series 6300 for Oahu and Hawaii and "Best" for Kauai. (For Maui only: Locksets shall be LM521 Falcon IC with 630 finish. Padlocks shall be Wilson-Bohannon, Model 8513-IC.) Cylinders will be furnished by the Department except Hawaii to suit their master key system. Hawaii shall furnish lock and cylinder.*

10. All hardware shall be as specified in the special Provisions or on the plans.

C. Payment. No separate payment for FINISH HARDWARE will be made; the compensation for such work shall be deemed to be included in the Unit Price Bid or Lump Sum Bid, whichever is specified, for the item of which it is a part.

303.25 ACOUSTICAL TILE.

A. Description. The work shall include the furnishing of all labor, materials, tools, equipment and incidentals required to install all acoustical tile work as shown on the plans and specified in these Standards.

B. Work Specified Elsewhere. Treated wood furring strips are furnished and installed under Section 303.19 - CARPENTRY AND MILLWORK, but layout shall be coordinated under this section.

C. Samples. Samples of the tile and any appurtenances together with six (6) sets of the manufacturer's specifications of the tile and of the fastener system shall be submitted to the Manager for approval. Tile shall not be ordered or installed without this approval.

D. Applied Tiles.

1. Materials.

a. Tiles shall be non-asbestos and conform to Federal Specification SS-S-118a as follows:

Type:	Type I (cellulose composition) or Type III (Mineral composition).
Pattern:	Pattern b, c, d, e, f or h
Classes:	Class 25
Light Reflectance Coefficient:	LR 1 (75% or greater)
Size:	12" x 12" x thickness to meet Noise Reduction Coefficient (NRC) value
Edges:	Beveled
Jointing:	Butted, T & G, Flanged or Kerfed depending on manufacturer's recommendations for mounting.
Finish:	White factory finish
Mounting:	Direct to wood stripping
Manufacturer:	Units shall conform to the above requirements and shall be as produced by a member of the Acoustical Insulating Materials Association.
NRC:	.90 to .95

b. Edge Molding shall be wood as detailed.

c. Fasteners shall be rust-resistant and of the type recommended by the Manufacturer for the mounting used.

2. Installation.

a. General: Shall conform to the manufacturer's directions for the tile used and to the layout shown on the plans. Area covered shall be as shown for the grade installed. All doors and windows shall be in place before installation of tile.

b. Preparatory Work for Direct-to-Wood Strip Mounting: Surface to receive acoustical units shall be dry, level, and free from irregularities. The Contractor shall be responsible for the examination and acceptance of all surfaces and conditions affecting the installation of the Contractor's work. Start of the Contractor's work shall constitute acceptance of all conditions. Unsatisfactory conditions shall be reported to the Manager so that corrective measures can be taken.

c. The tiles shall be installed with all edges in alignment, with neat and close-fitting joints and all faces of the tiles in the same plane.

d. Install acoustical tiles directly to wood furring by the use of rust resistant staples with a minimum leg length of 3/4 inch. Each tile shall be fastened with a minimum of four such staples. Three staples 5 inches on centers in one flange, parallel to the furring strip, and one staple in the second flange at the opposite corner of the tile, in the next furring strip.

E. Suspended System.

1. Materials.

a. Tiles shall be non-asbestos and conform to Federal Specification SS-S-118a as follows:

Type:	Type III, Owens/Corning Nubby
Pattern:	h
Class:	Class 25
Grade:	Grade 3
Size:	24"x48"x3/4" minimum thickness
Edges:	Beveled or square
Finish (LRR):	White factory finish, minimum 75% reflectance
Mounting:	Lay-in type with exposed suspension grid system
K factor:	.24 @ 75¼F
NRC:	.90 - .95

b. Suspension system shall be stock metal type at the option of the Contractor, but conforming to the following:

i. Metal shall be anodized aluminum tees and angles with white factory finish on exposed face. Aluminum shall be standard 6063-T5 alloy.

ii. Main runners shall be 24 inches or 48 inches on centers supported by minimum No. 12 gauge wire hangers not over 48 inches centers. Isolate hangers from "Tees" with plastic sleeve.

iii. “Cross-T” splines shall be snap-in type with positive key lock.

iv. Metal edge trim shall be installed as required.

v. The assembled grid shall be level to within a tolerance of 1/8 inch in 12 feet.

c. This Contractor shall consult with Mechanical and Electrical Contractors and coordinate the Contractor’s work in such manner as to result in a satisfactory installation of mechanical and electrical fittings or fixtures.

2. Manufacturer. Units shall conform to the above requirements and shall be as produced by one of the following manufacturers, or an equal as approved by the Manager.

a. Armstrong World Industries Inc.

b. The Celotex Corp.

3. Installation.

a. General: Installation shall conform to the manufacturer's directions for the tile and suspension system used and to the layout shown on the plans. All doors and windows shall be in place.

b. Preparatory Work: This Contractor shall be responsible for the examination and acceptance of all surfaces and conditions affecting the installation of the Contractor’s work. Unsatisfactory conditions shall be reported to the Manager so that corrective measures can be taken.

F. Cleaning and Rejection. The Contractor for Acoustical Work shall exercise all necessary precautions to avoid damaging or soiling the units. Final appearance shall be to the satisfaction of the Manager. All damaged units shall be replaced with new units by the Contractor. The following defects shall also be cause for rejection or replacement at Contractor's expense:

1. Uneven joints or unaligned surfaces.

2. Soiled tiles not cleaned to original condition.

3. Fractures, cracks or corner chips.

4. Color variation.

5. Loose or fallen tiles.

G. Guarantee. The Contractor shall submit to the Department, a one-year written warranty from the time of acceptance of the project as a whole, countersigned and guaranteed by the general Contractor covering all materials and workmanship, and on written demand by the Department within that period, shall correct or replace any defective materials or workmanship at the Contractor's own expense.

H. Replacement Provisions. Upon completion of the installation, furnish the Department with one full carton of new, undamaged acoustical tiles for each type supplied on the project.

I. Payment. No separate payment for ACOUSTIC TILE will be made; the compensation for such work shall be deemed to be included in the Unit Price Bid or Lump Sum Bid, whichever is specified, for the item of which it is a part.

303.26 SOUND ATTENUATING ENCLOSURES.

A. Description. This item of work shall include the furnishing of all labor, materials, tools, equipment and incidentals required to construct and install, all sound attenuating enclosures, in place complete, as shown on the plans and as specified in these Standards.

B. General. All applicable work for the Sound Attenuating Enclosure shall be as specified in this Standards and as detailed on the plans. The Detailed Specifications of the Special Provisions for each project shall supplement and modify these Standards.

C. Payment. Payment for sound ATTENUATING WORK (1) will be made at the respective Unit Price Bid or Lump Sum Bid, whichever is specified, or (2) will not be made directly, but shall be included in the payment of which it is a part. In either case, such payment shall represent full compensation for furnishing all materials, labor, tools, equipment and incidentals required to complete the work.

303.27 PAINTING.

A. Description. This item of work shall consist of the furnishing of all labor, tools, materials, and equipment required to complete the finish painting on metal, concrete or other surfaces, in place complete, ready for use.

B. General Requirements. Furnish and lay drop cloths in all areas where painting is to be done. Store all painting materials in one location. Prepare all surfaces to proper condition for painting. Under no condition shall paint be applied until the preceding coat is hard and dry. All coats shall be shaded "off color" from the preceding coat. Final color tint shall be subject to change based on evaluation of site conditions prior to time of application. The Contractor shall apply the final coat only after receiving the Manager's authorization to proceed.

Surface preparation shall be in strict conformance with the paint manufacturer's specifications.

Shop coats shall be coatings applied in the shop to meet the requirements of these specifications.

Factory finishes shall be the manufacturer's standard coating for it's finished products and shall not be confused with shop coats.

Paint thickness shall be 6 mil minimum dry film thickness (DFT) unless otherwise specified. Painting shall be at rates of application per layer in strict accordance with the manufacturer's direction to achieve the total dry film thickness specified. Manufacturer's representative shall verify all paint spread rates.

The manufacturer's representative shall be present as often as the representative deems necessary to assure that the application of the product is in conformance with the manufacturer's specification and will in no way negate the warranty of the manufacturer.

The Contractor shall coordinate the presence of the manufacturer's representative and shall provide the manufacturer's representative a schedule of the painting work. The schedule shall be updated to meet project requirements.

Prohibitions: All paints shall be free of cadmium, zinc-chromate and/or strontium-chromate, lead and mercury.

C. Samples. Submit six samples (one foot square each) for each color and texture for approval by the Manager before proceeding with the work and make as many samples as required to secure desired results. Colors shall be as scheduled in the Special Provisions of each project's contract specifications.

D. Surface Preparation. All surfaces must be as per manufacturer's recommendations to produce results satisfactory to the Manager. All surfaces of different material are to be considered separately and are to be treated as per manufacturer's recommendations. Contractor shall inspect the surfaces to be painted. Applications of first coat constitutes the Contractor's acceptance of the surface and the responsibility for it, including the removal of hazardous materials. All surfaces shall be dry, clean and free from dirt, oil, grease or other foreign matters prior to painting.

E. Metal Surfaces. All metal surfaces to be painted shall be dry, clean and free from dirt, oil, grease, rust, scale or other foreign matters and comply with the following:

1. Shop Painting: All items which can be shop painted shall be coated as specified under paint schedule.

   Should the finish of any item receiving shop coats be damaged or scratched before, during or after installation, the item shall be recoated as specified in these Standards.

2. All metal surfaces, e.g. ductile iron pipe, pre-primed with an asphalt type paint, shall receive one heavy cover coat of Koppers Inertol Tar Stop or approved equal and an intermediate and finish film as specified above for factory finished metal surfaces.

3. All buried metal surfaces shall receive one heavy coat of Mobil Gilso Mastic or approved equal prior to burial.

4. Noncorrosive metals such as copper, brass or bronze shall not be painted.

5. New chain link fence and gate does not require painting unless specified otherwise.

F. Clean Up. Clean off all misplaced paint and remove all excess paint, materials and equipment from the job site upon completion. Leave premises neat and clean.

G. Paint Schedule. Unless otherwise specified, all new exposed and existing metal, masonry, concrete, plaster, and wood surfaces and all other miscellaneous items shall be coated using the systems specified in the Approved Materials List or approved equal:

H. Payment. Payment for PAINTING will not be made directly but shall be a part of the Unit Price Bid or the Lump Sum Bid, whichever is specified, for the item of which it is a part.

303.28 ARCHITECTURAL SPECIALTIES.

A. Description. This item of work consists of furnishing all labor, materials, tools, and equipment required to install the items listed herein, in place complete, ready for use.

B. Toilet Paper Holder. As manufactured by Bobrick Washroom Equipment, Inc., or approved equal, Model B-266, surface mounted toilet tissue cabinet, constructed of 22 gauge type 304 stainless steel with satin finish, equipped with a double pronged key lock to prevent vandalism. Large capacity: 1330 single fold tissues. Slots in cabinet indicate refill time. May be refilled with full standard pack before dispenser is empty. Measure 5 inches wide, 8½ inches high, 3 inches deep.

C. Towel Dispenser and Mirror. Surface mounted combination unit with highly polished stainless steel mirror, paper towel dispenser and shelf all constructed of heavy gauge type 304 stainless steel with double prong key lock. Bobrick Washroom Equipment, Inc., Model B-33009 or approved equal.

D. Toilet Compartment.

1. General. Toilet compartment shall be floor braced, flush construction with laminated plastic finish, as manufactured by the Sanymetal Products Co., Inc., or approved equal.

2. Materials and Construction. Toilet compartment materials and construction shall comply with the following:

a. Doors: Shall be constructed of 1/16-inch plastic laminate NEMA approved, laminated under heat and pressure to a solid 45 pound density flakeboard core. Finished doors shall be 1-inch thick with face sheets applied over selfedged edgebanding.

b. Panels: Shall be ¾-inch thick and of same construction, finish and performance standards as for doors specified above.

c. Pilasters: Shall be 1-1/4-inch thick of same construction, finish and performance as for doors specified above. Pilasters shall be secured to floor with ¼-inch thick anchor bar mechanism fastened to bottom of pilaster, secured and leveled with 7/16-inch bolts and nuts tension/compression mounted.

d. Hardware: Door shall be hung on concealed hinges recessed in the edge of door above and below level of door. Door shall be equipped with door keeper and stop chrome plated non-ferrous with rubber bumper. Latch shall be concealed within the door thickness with brass polished chrome plated escutcheon plate and knob. Door bolts shall be stainless steel bullet nosed. Pilaster base shall be 3-inches high, #304 stainless steel polished finish.

3. Shop Drawings Submittal. Submit six (6) sets of detailed shop drawings, covering the toilet compartment for the approval of the Manager before fabrication. Color as specified in the Special Provision of the contract specification.

E. Payment. Payment for ARCHITECTURAL SPECIALTIES will not be made directly but shall be a part of the Unit Price Bid or the Lump Sum Bid, whichever is specified for the item of which this item is a part.

303.29 MISCELLANEOUS SPECIALTIES.

A. Description. This item of work consists of furnishing all labor, materials, tools, and equipment required to install the items listed herein, in place complete, ready for use.

B. Fire Extinguishers. Furnish and install wall-mounted dry chemical fire extinguisher, U.L. approved for A,B,C fires equal to UL-20A-80BC or approved equal. Casing to be enameled steel. Furnish complete with wall bracket and fasteners for attachment to masonry. Number of extinguishers shall be as indicated on the plans.

C. Gas Mask. Gas masks shall be industrial gas mask with an all "vision" face piece or approved equal. Gas mask shall meet all current OSHA requirements. Gas mask shall be supplied with wall mounting brackets.

D. Payment. Payment for MISCELLANEOUS SPECIALTIES will not be made directly but shall be a part of the Unit Price Bid or the Lump Sum Bid, whichever is specified for the item of which this item is a part.

303.30 PLUMBING.

A. General. This item of work consists of the furnishing of all labor, materials, tools and equipment required to install a complete plumbing installation as indicated on the plans and as specified in these Standards. The work includes supply piping, waste, fixtures and roof drainage system.

B. General Requirements.

1. Schedule all work to prevent construction delay with other trades.

2. Verify and template all dimensions at work site.

3. Lay all pipes in trenches not less than 18 inches below grade, provide plumbing with a continuous grade support. Excavate all trenches as required for installation of plumbing lines, backfill all trenches, tamp and compact all backfill in accordance with the specification elsewhere herein. Lay all drainage lines to uniform slope of 3/16 inch per foot minimum.

    a. Control all gradings at vicinity of trenching to prevent ponding of surface water.

    b. Construct all shoring to protect deep excavation from collapsing, providing railing to safeguard personnel.

    c. Remove and dispose all excess material not suitable for re-use as backfill.

4. All plumbing shall be done in the best practice of that trade.

5. All plumbing piping, vents, etc. shall be concealed or furred.

C. Schematic Drawings. Plumbing Installation Drawing and Fixture Schedule - Submit six (6) complete sets of complete and detailed plumbing drawings for the approval of the Manager not less than thirty (30) days before the start of plumbing installation work, together with catalog data for all plumbing fixtures and devices as specified.

D. Cutting and Patching. All cutting and patching of walls, partitions, floors, etc. necessary for the installation of piping and fixtures shall be performed by the Contractor. Furnish and install all inserts, bases, sleeves, etc. for the related work.

E. Materials.

1. Cast Iron Sewer Drain Pipes including fittings shall be service weight grade, ASTM A74 with dual tight gaskets, or no-hub cast iron soil pipe conforming to CISPI 301 with MG couplings or heavy duty "Husky" couplings with stainless steel bands.

2. Caulking Lead shall be best quality pig lead, delivered to the project in original bars or pigs.

3. Sheet Lead for flashing shall be 4 pounds.

4. Caulking Yarn shall be best grade plumber's tarred rope Oakum.

5. Water Supply Line shall be type "K" streamline copper pipe, hard grade, 400 pounds per square inch working pressure with cast bronze fittings.

6. Galvanized Steel Vent Pipe shall be schedule 40. Fittings shall be drain fittings recessed screw type.

7. PVC Pipe shall be Schedule 80, high impact, threaded. Fittings shall be molded PVC, threaded.

8. Drains shall be as specified on plans and specifications.

9. Hose Bibs shall be as specified on plans and specifications.

10. Control Valves as specified for 200 pound water service (125 pound steam), globe, gate or ball valves.

F. Installation. The Contractor shall secure at the Contractor's own expense all necessary permits required for this item of work.

1. Water Supply Line: Copper pipes and fittings, including valves and hose bibs for the water service lines, shall be installed in accordance with the requirements of the Department. Pipes in concrete wall shall be installed in chaseways, detail of which shall be subject to approval of the Manager. Galvanized sheet metal sleeves shall be installed for pipes passing through the floor and wall. Opening between the sleeves and pipe shall be tightly packed and sealed watertight. Necessary flange shall be provided where a pipe passes through finished floor or wall.

2. Vent Line: Vent pipe shall be galvanized steel pipe or DWV copper pipe and shall run from all fixtures to the roof in accordance with the applicable City or County Plumbing Code. Vent shall be flashed and counterflashed as specified in these Standards and as shown on plans.

3. Clean-Outs: Shall be installed at each bend, at bottom on stacks, at ends of horizontal runs and at every 50 feet in straight run of pipe. Clean-Out branches shall be equipped with brass screw plugs.

4. Traps and Branch Wastes: Traps shall be placed as closely as possible to the fixture outlets.

5. Cast Iron Pipes and Fittings of the grades specified shall be installed for the drain and sewer lines as shown on the plans.

6. Vent Pipe Flashing: Sheet lead, consisting of 24"x24" base in plane of roof with standing collar soldered thereto, extended above pipe and beaten down over top of pipe.

7. Dielectric Couplings: Dielectric couplings shall have a minimum 150 psi working pressure rating and shall be installed at all pipe joints between dissimilar metals. Dielectric couplings shall be EPCO insulated fittings or approved equal.

G. Fixtures. Furnish and install all fixtures indicated on the plans. Upon completion of the plumbing work, the entire plumbing system shall be tested for acceptable operating conditions. The fixtures specified below may be substituted with fixtures of equal quality from different manufacturer subject to pre-bid approval from the Manager. Fixtures shall be as follows:

1. Water Closet

   Wall mounted, wall outlet, elongated bowl, flush valve siphon jet, vitreous china, 1½" top spud. Water conservation type 1.6 gallons/flush maximum. Kohler K-4330 or approved equal, with heavy duty plastic open-front seat with check hinge. Provide wall floor supported carrier.

   Flush Valve: Sloan Royal 111, 1.6 gals/flush, hand actuation pressure, or approved equal.

2. Lavatory

   Kohler K2005, 20"x18", vitreous china lavatory with back; integral china brackets punched for anchoring screws; concealed wall hanger, with supply and stop, or approved equal.

   Kohler K7500 Self-closing lavatory faucet with supply and stop, or approved equal.

   Kohler 7701 Pop-up lavatory waste with removable stopper and 1-1/4-inch O.D. tailpiece, or approved equal.

   Kohler 17GA 1-1/4"x1½" P-trap, or approved equal.

   Pasco 1275 Chrome plated brass faucet hole cover or approved equal.

   All exposed metal shall be chrome plated.

3. Service Sink

   Kohler K6716 24"x20" acid resisting enameled cast iron service sink with back; wall hanger, and with rim guard, or approved equal.

   Smith 9120 P-trap standard with strainer; outlet 3" I.P.S., or approved equal.

   Kohler K8905 Exposed service sink faucet with vacuum breaker, lever handles, short spout, pail hook and hose end.

The following manufacturers for equivalent items shall be acceptable.

1. Eljer
2. American Standard
3. Josam
4. Crane

H. Tests. All plumbing pipe installation shall be subjected to pressure tests in presence of the Manager.

I. Payment. Payment for PLUMBING will not be made directly but shall be a part of the Unit Price Bid or of the Lump Sum Bid, whichever is specified, for the item of which this item is a part.

303.31 DRAINAGE SYSTEM.

A. Description. Drainage system shall include furnishing all labor, materials, tools, equipment and incidentals required to complete the drainage system including appurtenant structures, subsoil or perimeter drain and concrete gutter and ditch as shown on the plans and as specified in these Standards.

B. Storm Drains.

1. **Materials.** Drain pipes shall be of the size as called for on the plans or in the bid. Drain pipes shall comply with one of the following:

   a. Reinforced concrete pipe (RCP): RCP shall be class III circular reinforced concrete pipe manufactured in accordance with ASTM C76. Joint design shall be tongue and groove.

   b. Ductile Iron pipe (DIP) shall comply with requirements specified for water mains.

   c. Polyvinyl Chloride (PVC): PVC pipes comply with requirements specified for water mains.

   d. Aluminum Spiral Rib Pipe (ASRP) (Not applicable for Oahu): ASRP material shall conform with the following:

      1. The pipe shall be formed from coiled sheet conforming to the requirements of ASTM B209 alloy alclad 3004-H34. Pipe thickness shall be selected by the Manager from the following guide.

Thickness (inches)	Equivalent U.S. Gauge No.
0.060	16
0.075	14
0.105	12
0.135	10

2. Spiral reinforcing ribs shall be ¾-inch by ¾-inch inside dimension and located approximately 7 ½ inch on centers. These ribs shall be placed symmetrically between lockseams so that lockseams shall be approximately 22 ½ inch on centers.

3. Lockseam shall be continuous helically, placed parallel to the ribs. Edges of the sheet within the lockseam cross section shall be at least 5/16 inch. Profile of lockseam shall be flat within interior wall surface to avoid hydraulic roughness. The offset on the outside surface adjacent to the 180° fold shall be at least on sheet thickness.

4. Field joints in pipe shall be made with aluminum band couplers of a type approved by the Manager. Coupling bands may be three gauges lighter than that of the pipe, but not less than 18 gauge (0.048”).

2. Installation.

a. Reinforced Concrete Pipe: Excavation, pipe cushion and backfill for pipe trench shall comply with the requirements specified for water mains and appurtenances.

Laying: Each pipe section shall be carefully laid on prepared cushion so that the pipe section has a firm bearing along its entire length. The pipe section shall be laid upstream beginning from the outlet with the groove end upstream.

Jointing: The pipe ends shall be thoroughly cleaned and wetted with water before the joint is made. The tongue end of the pipe shall be inserted in the groove of the preceding pipe and the joint pulled up tight.

The outside joint may be packed and pointed with stiff 1:2 mortar or poured with grout using mold or runner around the pipe. Grout shall be of the consistency easily poured and shall completely fill the joint space. Grout shall be mixed for at least 15 minutes and shall be poured within 30 minutes. A flexible wire shall be used to vibrate and compact the grout.

After the joint is made, the inside surface of the pipe and the annular space between the ends of the pipe shall be cleaned. The joint shall be filled with mortar and finished smooth and even with the inside surface of the pipe.

The joint shall be at least 36 hours old before any backfill is permitted.

b. Drain Pipe: Drain pipes shall be laid on prepared cushion as specified hereinabove. The bell end of the pipe shall face upstream. The spigot end shall be inserted in the bell of the preceding pipe and the joint pulled up tight. The spigot end shall be centered in the bell.

The joint shall be caulked tight with stiff 1:2 cement mortar. Installed pipe shall not be disturbed for at least 36 hours from the time the joint is made.

c. ASRP: Excavation, pipe cushion and backfill for pipe trench shall comply with the requirements specified for water mains and appurtenances.

Placement of Pipe: Where necessary, proper facilities shall be provided for lowering the pipe into the trench. Pipe shall not be thrown from the truck or into the trench. Pipe shall be laid carefully and true to lines and grade as given. Where aluminum drainage pipe is to be in contact with steel structures or components, contact areas shall be given a heavy bituminous coating, inside and out, for a distance of 3 feet beyond the contact, or bituminous-coated coupling bands shall be used.

C. Storm Drain Manholes, Catch Basins and Headwall. Storm drain manholes and catch basins unless otherwise specified on the plans shall be constructed to the dimensions and in accordance with the "STANDARD DETAILS for Public Works Construction" for all county Departments of Public Works in the State of Hawaii.

Headwall shall be constructed to the dimensions as detailed on the plans.

D. Subsoil or Perimeter Drains. Drain tile shall be accurately laid to the lines and grades as shown on the plans or as directed by the Manager. Corrugated, perforated type pipe material may be used in lieu of drain tile.

Drain tile shall be red unglazed clay, concrete, or high density polyethylene pipe or approved equal, 6-inches inside diameter and in lengths not to exceed 18-inches and capable of supporting H20 traffic loads. Drain tile shall be laid on a 3-inch bed of No. 3 crushed rock and shall be laid with ½-inch open joints with a layer of one-ply 40-pound roofing felt (6-inch width) around the upper half of each joint. The roofing felt shall be fastened in place with tie wire.

Corrugated, perforated pipe shall be PVC plastic perforated drain pipe, schedule 40, 4-inch O.D. or as shown on the plans. The pipe shall be laid on a 3-inch bed of No. 3 crushed rock.

Drain tile shall be sloped to outlet as drawn or otherwise directed by the Manager.

Backfill around drains shall consist of a combination of #3-fine crushed rock as specified in Section 303.03 - CONCRETE WORK as shown on the plans or as directed by the Manager. Crushed rock fill shall be continued to a minimum of 12 inches above the top of the subsoil drain pipe. Geotextile fabric shall be wrapped around the entire crushed rock backfill to prevent seepage of fine material into the drain. Regular backfill shall then be completed to the required grade.

E. Concrete Gutter and Ditch. Concrete gutter and ditch shall be installed to the lines, grades and details as shown on the plans.

Concrete shall be DWS 2500 as specified elsewhere under concrete. Gutter and ditch shall be laid on well compacted base with construction joints spaced not more than 12 feet on centers.

F. Payment. Payment for DRAINAGE SYSTEM (1) will be made at the respective Unit Price Bids for the various items or the Lump Sum Bid, whichever is specified, or (2) will not be made directly but shall be included in the lump sum payment of which it is a part. In either case, such payment shall represent full compensation for furnishing all materials, labor, tools, equipment and incidentals, including excavation and backfill, required to complete the work as indicated on the plans and as specified in these Standards.

Payment quantity under Unit Price Bid shall be measured as follows:

1. Payment quantity for TRENCH EXCAVATION (without Classification) including backfill and pipe cushion shall be the total cubic yardage excavated based on place measurement, computed from the finish ground elevation to 6 inches below the invert grade of pipe and to the trench width specified for water mains of the same size. For 18-inch drain, the trench width shall be 36 inches. The length of trench excavation to be paid for shall be the horizontal distance between the outside faces of the drainage structures. Backfill and pipe cushion shall be incidental to excavation.

2. Payment quantity for furnishing and installing the various sizes in each material classification of DRAIN PIPES shall be the total linear feet of the respective pipes installed in place complete.

3. Payment quantity for DRAIN MANHOLES AND DRAINAGE STRUCTURES shall be the actual number of units installed in place complete, inclusive of necessary excavation and backfill.

303.32 ACCESS ROAD AND PAVED AREA.

A. Description. This item of work shall include all labor, materials, tools, equipment and incidentals required to complete the access road and the paved areas to the lines, grades and details as shown on the plans and as specified in these Standards.

B. Excavation. All excavation for the access road shall be unclassified and shall consist of the removal and proper disposal of all materials necessary and required for the formation of roadway prism, including the construction of the roadbed, embankments, subgrade, the removal and disposal of surplus and undesirable materials, and the necessary excavation and preparation of foundation for the installation of curbs and gutters.

Slopes on cut or fill shall be in conformity with the details as shown on the plans and as established by the Manager.

Blasting shall be as specified elsewhere in these Standards.

C. Asphaltic Concrete Pavement.

1. Preparation of Crushed Rock Base Course. Base course shall consist of crushed rock aggregate placed on satisfactorily completed subgrade to the lines, grades and thickness as shown on the plans and in accordance with the Water System Standards. Reasonable variations from the planned dimensions may be required by the Manager to meet special conditions in the field.

a. Materials: The aggregate shall consist of crushed rock uniform in quality, free from clay, vegetable matter, loam or other deleterious substances, and when tested in accordance with AASHTO Designation: T 96, the loss by abrasion of the coarse material shall not exceed 50 percent at 500 revolutions. The base course aggregate shall be uniformly graded and when determined by laboratory sieve analysis, shall conform to the grading requirements as shown in Table 300-13:

Table 300-13 - BASE COURSE AGGREGATE

Screen Size (Square Openings)	Percent Passing By Weight
3"	100
2½"	90 - 100
2"	35 - 70
1½"	0 - 15
1"	0 - 5

Filler material shall consist of that portion of the crusher product, including dust or fracture, which will pass a screen having ½-inch square openings.

Filler shall be uniformly graded from coarse to fine, and when determined by laboratory sieve analysis, shall conform to Table 300-14:

Table 300-14 - FILLER MATERIAL	
Screen Size (Square Opening)	Percent Passing By Weight
½"	100
3/8"	90 - 100
No. 8	25 - 45
No. 100	10 - 30

b. Construction. Dumping of material in piles upon the subgrade will not be permitted. The coarse aggregate shall be spread on the prepared subgrade to such a depth that when thoroughly compacted it will be to the full thickness required. The coarse aggregate shall be compacted by rolling with a 3-wheeled or tandem power roller, weighing not less than ten tons, until the material does not creep in front of the rollers.

The filler material shall then be spread in thin layers and each layer rolled until no more filler can be forced into the voids. The surface shall then be broom-dragged, sprinkled with water and again rolled. The sprinkling and rolling shall be continued and additional filler applied where required, to produce a smooth, well bonded surface with a slight sheen.

If the base course is disturbed or mixed with unsuitable material, the affected portion of the base course shall be removed and replaced with satisfactory material in the manner required for the original work.

2. Asphaltic Concrete. Asphaltic concrete shall be as follows:

a. Mineral Aggregate. Mineral aggregate shall be obtained from crushed rock free from soft particles, clay, vegetable matter or other deleterious substances and uniformly graded from coarse to fine.

b. Bituminous Material. Bituminous material shall be an asphalt cement with a penetration of 85 - 100 for imported asphalt or 60 - 70 for locally refined asphalt and shall meet the requirements of the standard tests of the AASHTO for asphalt cement of the grade specified.

c. Grading and Composition. Mixture shall be driveway or tennis court mix meeting the following requirements as shown in Table 300-15:

Table 300-15 - ASPHALT CEMENT GRADING	
Sieve Size	Percent Passing By Weight
½"	100
3/8"	84 –100
No. 4	60 – 75
No. 8	40 – 60
No. 30	17 – 40
No. 100	10 – 16
No. 200	4 – 10

Asphalt cement by weight shall be 5 - 9 percent.

d. Mixing. The asphalt cement shall be heated in a kettle of an approved type and maintained at a temperature between 275°F and 325°F. Heat shall not be applied so as to cause burning of the asphalt cement. No live steam shall be injected into the asphalt cement.

The mineral aggregate shall be heated in an approved appliance to a temperature of not less than 275°F nor more than 325°F.

Mixing shall be done in a standard pugmill type mixer. The aggregate shall be properly proportioned and mixed with the required amount of asphalt cement. The mass shall be mixed for at least 45 seconds or longer if necessary to produce a homogeneous mixture in which all particles of the aggregate are uniformly coated with asphalt cement. The mixture shall be brought to the work in suitable vehicles at a temperature not less than 275°F nor more than 325°F.

e. Placing. All surfaces on or against which asphalt concrete is to be placed shall be given a prime coat of emulsified asphalt or asphalt prime coat. Before applying the prime coat, all loose particles, dirt and other objectionable materials shall be swept clean from the surface. Prime coat shall not be applied when the surface to be treated is appreciably damp or when weather condition is unsuitable.

Prime coat shall be uniformly applied by a pressure operated, sprayer type distributor at an approximate rate of 0.20 of a gallon per square yard. No traffic shall be allowed until the prime coat has been completely absorbed. Concrete curbs, sidewalks and gutters shall be protected from prime coat and any misplaced material shall be immediately cleaned off.

After the surface has been prepared with prime coat, asphalt concrete shall be spread with a self propelled mechanical spreading and finishing equipment, or by hand method as required. Asphalt concrete shall not be spread from hauling vehicles. No asphalt concrete shall be spread when the base is wet or during unsuitable weather.

Asphalt concrete shall be compacted immediately after placing with self-propelled power rollers of approved type for the purpose intended. After the first pass of the roller, any low or grainy spot shall be reworked to secure a surface of uniform texture and maximum density. Rolling shall continue until no roller marks show on the surface.

The finish surface when tested with a 10-foot straight edge shall show no deviation of more than 1/8 inch.

f. Opening to Traffic. No traffic shall be allowed until the finished pavement has cooled and become set.

D. Reinforced Concrete Pavement.

1. Subgrade. Subgrade shall be constructed to the required cross-section and grade. Compaction shall be by means of self-propelled roller of an approved type. Soft spots shall be removed and backfilled with select material as directed by the Manager. Finished subgrade shall be tested with a template and any faulty spots shall be reworked to the satisfaction of the Manager.

2. Material. Materials shall be as follows:

a. Concrete. Concrete shall be DWS 2500 in accordance with the requirements specified under Section 303.03 - CONCRETE WORK.

b. Reinforcement. Reinforcement shall be as specified under REINFORCING STEEL, WELDED WIRE FABRIC.

c. Forms. Forms shall be of wood or metal and shall be set to proper grade and alignment. Transverse forms shall be installed perpendicular to the centerline of the pavement.

d. Joint Fillers. Poured joint fillers shall be asphaltic cement, grade 85 - 100 in accordance with AASHTO Designation M20, which has been cut with kerosene or diesel oil.

Premolded joint filler shall consist of a suitable asphaltic mastic meeting the requirements of AASHTO Designation M153.

Joint sealers shall conform with the applicable requirements of Section 705 - JOINT MATERIALS of the "STANDARD SPECIFICATIONS FOR ROAD AND BRIDGE CONSTRUCTION", of the Hawaii Highways Division, DOT.

e. Dowels. Dowels for transverse joints shall be plain round bars in accordance with ASTM A615 and all subsequent amendments.

3. Construction. When concrete is placed, the subgrade shall be damp but without puddles or pockets of mud. The concrete pouring operation shall begin at the lower elevation and work upgrade and shall conform to the following:

a. Placing Concrete. Concrete shall be placed to the required depth for the entire width between the side forms and in one continuous operation between joints.

Construction joint assembly shall be on hand at all times and shall be installed where stoppage of pour occurs at points other than the predetermined joint. No joint shall be formed less than 15 feet from any other joint.

Concrete shall not be dumped from the mixer directly upon the expansion joint assembly.

Where wire fabric reinforcement is installed without the use of supports, concrete shall be placed in two layers. The portion of the concrete which is required under the reinforcement shall first be placed and roughly struck off. The reinforcement shall then be installed and covered with the balance of the concrete. The final position of the reinforcement shall be as shown on the plans.

Wire fabric shall be rolled out flat and held firmly in place before placing concrete.

Unless otherwise specified, pavement shall be placed in sections shown on the plans.

Concrete shall be placed with a slump of not more than 2 inches (without admixtures).

b. Tamping. The concrete shall be brought to the required grade and shape by use of a strike board or tamper made from a heavy plank, shod with metal strip. The strike board or tamper shall extend the full width of the pavement and stiffened to prevent sag.

The strike board or tamper shall be manipulated to compact the concrete into place and at the same time to screed the surface.

c. Finishing. Concrete shall not be placed in excess of the amount which can be completely finished during daylight hours. The finishing operation shall be completed with a minimum of manipulation.

After tamping has been completed, the surface of the concrete shall be floated with wooden floats, true to grade.

The pavement shall be finished, as the Manager may direct, with a drag broom forming uniform corrugations perpendicular to the center line and not more than 1/8-inch deep or with V-shaped grooves, 1/4-inch deep and 2 inches center to center, perpendicular to the center line. With edging tools, the outside edges of the pavement shall be rounded to ½-inch radius and the edges of transverse joints shall be rounded to 1/4-inch radius.

The finished surface when tested with a 10-foot straight edge placed parallel with the center line shall not vary perceptibly from the under side of the straight edge. High points in excess of 1/8-inch shall be removed by abrasive means.

In case fine cracks or hairline cracks appear in newly placed concrete before it has thoroughly set, immediate steps shall be taken by the Contractor to remedy this condition. Pavements which show serious cracking shall be removed by the Contractor and replaced at the Contractor's expense.

d. Curing. The pavement shall be cured either by Hunt's process, with approved impervious membrane, or with a blanket of moist sand, or approved equal.

e. Pouring Joints. After the pavement has been cured for 10 days, all poured joints shall be cleaned and filled with poured joint filler material.

4. Opening to Traffic. Concrete pavement shall not be opened to traffic for a period of 20 days after the concrete has been placed. After the pavement is opened to traffic the operation of only pneumatic-tired equipment will be permitted.

5. Final Inspection. Sections of the pavement with excessive cracks, fractures or other defects shall be removed by the Contractor and replaced at the Contractor's own expense.

E. Coral Pavement. This item shall cover the paving as shown on the plans and as specified hereinafter.

1. Top Course. The base shall be properly compacted by rolling until the surface is in a relatively smooth and even condition to receive the top course.

Materials for top course shall be crusher-run limestone with a maximum aggregate size of 1½-inches. Material shall be placed and spread over the compacted base so that the top course after rolling shall have the required thickness and shall be to the grade as shown on the plans.

The surface shall be broomed and rolled until the entire finished surface shall be uniform and free from pockets of large or fine material.

All rolling shall be done with power rollers weighing between 10 and 12 tons and shall continue until a low sheen is visible on the surface of the coral.

2. Bituminous Coating. Material shall be slow-curing liquid asphalt or penetration-type emulsified asphalt.

Immediately before applying the material, the surface shall be dry and free from debris and dirt. The material shall be applied uniformly with a sprayer at minimum rate of 0.30 gallon per square yard. No traffic shall be allowed until the material has been completely absorbed.

Building, sidewalks or other adjoining improvements shall be protected during application and any misplaced material shall be immediately cleaned off.

F. Concrete Curb. Concrete curb shall be as called for on the plans, either precast curb in accordance with the standards of the City or County, or cast-in-place curb, or rolled curb and gutter.

1. Material. Concrete shall be DWS 2500 and shall be placed in accordance with the requirements under Section 303.03 - CONCRETE WORK.

2. Construction. The foundation for concrete curbs shall be thoroughly compacted and brought up to the required grade and cross-section. Concrete curb shall be installed to the lines and grades as shown on the plans and as specified below:

a. Precast Concrete Curb. Curbs shall be installed with joints between blocks of not more than ½ inch. Joints shall be filled with 1:3 mortar and neatly pointed.

   Where concrete pavement is placed against the curb, the curb shall have attached thereto, a premolded expansion joint filler strip set 1/4 inch below the top and to cover the full depth of the pavement. The joint along the curb shall be neatly finished.

b. Rolled Curb and Gutter. Rolled curb and gutter shall be poured with construction joints spaced not more than 12 feet on centers. Joints shall be right angles to the curb line.

   The exposed surfaces shall be steel troweled and finished without irregularities noticeable to the eye. Exposed edges shall be rounded with edging tool.

c. Cast-In-Place Curb. Curb placed around short radius curve shall be cast to the radius of the curb as nearly as possible.

G. Concrete Gutter. Concrete gutter shall be poured on compacted subbase to lines and grade as shown on the plans. Concrete shall be DWS 2500 and shall be placed in accordance with the requirements under Section 303.03 - CONCRETE WORK.

Construction joints shall be right angles to the centerline and spaced not more than 12 feet on centers. Surface shall be finished smooth with steel trowel.

H. Header. Headers shall be installed to line, grade, and location as shown on the plans. Concrete headers shall be 3"x 6" minimum, reinforced and of class concrete as shown on the plans and troweled to a smooth finish after placing in accordance with the requirements under Section 303.03 - CONCRETE WORK.

I. Payment. Payment for ACCESS ROAD AND PAVED AREA (1) will be made at the respective Unit Price Bids for the various items or the Lump Sum Bid, whichever is specified, (2) will not be made directly but shall be included in the lump sum payment of which it is a part. In either case, such payment shall represent full compensation for furnishing all materials, labor, tools, equipment and incidentals, including excavation and backfill, required to complete the work as indicated on the plans and as specified in these Standards.

Quantity to be paid for under Unit Price Bid shall be measured as follows:

1. Access Road Excavation. Quantity shall be the total number of cubic yards excavated based on placed measurements computed on the average end areas and the horizontal center line distances. Embankments and the removal of unsuitable material including backfill will not be paid for directly and shall not be included in the payment quantity.

2. Pavement. Quantity shall be the total number of square yards of asphalt concrete or reinforced concrete pavement installed, measured on its actual dimension laid.

3. Curb. Quantity shall be the total number of linear feet of the respective curbs installed.

4. Gutter. Quantity shall be the total number of linear feet of gutter installed.

5. Concrete Header. Quantity shall be the total number of linear feet of concrete header installed.

6. Paved Area. Excavation for the paved area will be paid for under Pavement. Pavement will be paid for as provided in the Bid.

303.33 CHAIN LINK FENCE AND GATE.

A. Description. The work shall consist of furnishing all material, labor, tools, equipment and incidentals required to install chain link fence, chain link gate, and all appurtenances in place complete, as shown in the Standard Details or on the plans and as specified in these Standards.

B. Material. All materials for the fence work shall be heavily galvanized by hot-dip process.

1. Fabric. Fence fabric shall be No. 9 gauge and have a uniform diamond mesh measuring approximately 2 inches between its parallel sides. It shall be woven of copper bearing steel wire, heavily galvanized by hot dip process before weaving. Top and bottom selvages shall have twisted and barbed finish. All barbing to be done by cutting wire on bias, thus creating sharp points.

2. Posts. All posts shall be standard full weight galvanized steel pipes. Galvanizing shall be in accordance with ASTM A153 and sizes shall be as specified in Table 300-16:

Table 300-16 - CHAIN LINK FENCE POST

Type Of Post	Nominal Diameter (in.)	Outside Diameter (in.)	Weight (lbs./lin. ft.)
Line Posts	2	2.375	3.65
Terminal, end corner, walk gate, angle and pull post	2½	2.875	5.79
Gate post to 14 feet	3½	4.0	9.11
Gate post to 16 feet	3½	4.0	9.11 fully grouted with one #5 rebar

3. Top Rail. Top rails shall be 1-1/4-inch Nominal, 1.660 O.D. galvanized steel pipe, 2.27 pounds per linear foot and shall be connected with galvanized couplings. Welding shall not be permitted.

4. Bracings. Braces shall be 1-1/4-inch Nominal, 1.660 O.D. galvanized pipe, 2.27 pounds per linear foot.

5. Fittings. All fittings used in connection with chain link fencing shall be hot-dipped galvanized, malleable wrought iron or pressed steel.

6. Tension Wire. Tension wire for bottom of fence fabric shall be No. 8 gauge extra heavy galvanized high carbon coiled steel wire.

7. Gate. Gate shall be chain link single or double leaf gate as called for on the plans. Gate frame shall be 2-inch O.D. galvanized steel pipe. Corner fittings shall be galvanized malleable castings. Gate fabric shall be as specified for fencing. The gate shall be furnished complete with special pivot type hinges, catch, stops, center rest and locking device for padlock. Gate shall be securely braced and trussed to prevent sagging.

For Kauai Only: Double swing drive gate shall be provided with locking chain, standard 3/8" galvanized proof coil chain, located as directed by the Manager.

8. Extension Arm. Post extension arms for supporting barbed wires shall be formed from .090-inch steel sheet and hot dip galvanized. Arms shall be designed to extend at a 45° angle with lock to securely fasten strands of barbed wire equally spaced with top strand located 12 inches above the fabric and 12 inches out from the fence line.

9. Barbed Wire. Barbed wire shall be composed of 3 strands of No. 12-½ gauge wire with 4 point barbs spaced 5 inches apart and heavily galvanized.

C. Installation. The ground along the fence line shall be properly graded on a straight grade. All obstructions shall be removed.

Line posts shall be spaced 10 feet apart maximum, measured from center to center of posts. Post spacing shall be determined by measurement parallel to the slope of the ground. All posts shall be placed plumb.

All posts shall be set in DWS 2500 concrete footings. Size of footings for the posts shall be as shown on the Standard Details.

End, corner and gate posts shall be braced to the nearest line post with horizontal braces and each brace shall be diagonally trussed using galvanized 3/8-inch steel rods with tighteners and necessary fittings.

Top rail shall pass through the base of post top and form a continuous brace from end to end of each stretch of fence. Top rail shall be securely fastened to end, gate, and corner posts by means of suitable connectors.

The bottom tension wire shall be stretched tight and installed on a straight grade between posts. Wire shall be parallel to the top rail approximately 2 inches above the bottom of fabric and be securely fastened to the posts.

Chain link fabric shall be mounted on the side of the posts designated by the Manager with the bottom of fabric not more than 3 inches nor less than one inch above the ground.

The fabric shall be stretched taut and securely fastened to the posts. Fabric shall be fastened to line posts, approximately 12 inches apart, and to top rail and bottom tension wire, approximately 24 inches apart. Tie wire to be used as fasteners shall be No. 9 galvanized wire.

The fabric shall be fastened to end, corner and gate posts with 1/4"x3/4" stretcher bar and 1/8"x3/4" stretcher bar bands spaced at 12-inch intervals.

Chain link fence and gate shall not be painted unless otherwise directed by the Manager. *(For Hawaii Only: Chain link fence and gate shall be painted with two coats of black machinery enamel paint.)*

For Kauai Only: The contractor shall furnish padlocks for all gates. Padlocks shall be "Best" Model 41B722-L-P5-1534X1534 manufactured by Best Lock Corporation d/b/a Best Access Systems. The padlocks shall be stamped "D.O.W." on one side and "County of Kauai" on the other side. The Contractor shall provide the cores and 2 keys for each padlock. The Department of Water (DOW) will assign the core numbers and insert the cores into the padlocks with the DOW control key. The padlocks shall be hand carried to the DOW office for core insertion. The Kauai Department of Water security system is master keyed to the Best Lock Corporation system and therefore no substitutes will be accepted.

D. Payment. Payment for CHAIN LINK FENCE AND GATE (1) will be made at the respective Unit Price Bids or Lump Sum Bids, whichever is specified, or (2) will not be made directly but shall be included in the payment of which it is a part. In either case, such payment shall represent full compensation for furnishing all materials, labor, tools, equipment and incidentals, including excavation, grading and concrete required to complete the work.

Payment quantity under Unit Price Bid shall be the actual number of linear feet of chain link fence inclusive of fabric, posts, top rail, bracings, fittings, tension wires, excavation and backfill, concrete footings, barb wire and other incidentals constructed in place complete from the outside of end posts exclusive of the chain link gate, and the actual number of chain link gates constructed in place complete.

SECTION 304 - MECHANICAL AND ELECTRICAL

304.01 PUMPS.

A. Vertical Turbine Pumps. The manufacturer of the vertical turbine pumps shall be a nationally advertised firm with at least ten years of experience in the design and manufacture of pumps of this type, and shall be as specified in the Detailed Specifications of the Special Provisions for each project.

B. Horizontal Centrifugal Pumps. The manufacturer of the horizontal-shaft, axially-split, double-suction, centrifugal pumps shall be a nationally advertised firm with at least ten years of experience in the design and manufacture of pumps of this type, and shall be as specified in the Detailed Specifications of the Special Provisions of each project.

C. Submersible Pumps. The manufacturer of the submersible pumps shall be a nationally advertised firm with at least ten years of experience in the design and manufacture of pumps of this type, and shall be as specified in the Detailed Specifications of the Special Provisions of each project.

304.02 MOTORS.

A. Vertical Motors. The manufacturer of the vertical motors shall be a nationally advertised firm with at least ten years of experience in the design and manufacture of motors of this type, and shall be as specified in the Detailed Specifications of the Special Provisions for each project. The motors shall be normal torque, low starting current, drip-proof, vertical, hollow-shaft, squirrel cage induction motors with NEMA Weather Protected Type I enclosure and shall conform to the standards of the National Electrical Manufacturers Association and the American Institute of Electrical Engineers.

B. Horizontal Motors. The manufacturer of the horizontal motors shall be a nationally advertised firm with at least ten years of experience in the design and manufacture of motors of this type, and shall be as specified in the Detailed Specifications of the Special Provisions for each project. The motors shall be of the squirrel cage induction type with drip-proof enclosure.

C. Submersible Motors. The manufacturer of the submersible motors shall be a nationally advertised firm with at least ten years of experience in the design and manufacture of motors of this type, and shall be as specified in the Detailed Specifications of the Special Provisions for each project.

304.03 ELECTRICAL WORK.

A. General. The Detailed Specifications of the Special Provisions for each project shall supplement and modify this section for electrical work.

1. Intent of Specifications and Drawings. The specifications and drawings are prepared in abbreviated form and include incomplete sentences. Omitted words and phrases shall be provided by inference to form complete sentences.

The specifications and drawings complement each other and what is specified, scheduled or mentioned by one shall be binding as if called for by both. The specifications and drawings are intended to specify nature, quantity and quality of work.

Before bidding, the Contractor shall visit the project site, and carefully review specifications and drawings, and obtain from local utilities their telephone and electrical service requirements. Any error or omissions shall be reported to the Manager at least ten days before submission of bids for interpretation or clarification.

2. Definitions.

"Provide" means furnish and install.

"Wiring" means provide all raceways, conductors, devices, protective equipment, etc., for a complete electrical system.

"Approved equal" means qualify material according to Subsection 304.03E - Materials and Workmanship.

3. As-built Drawings. The Contractor shall submit as-built drawings of all electrical work installed. The Contractor shall also laminate an as-built one line diagram and mount it inside of the motor control center. The laminated one line diagram shall be readable and mounted where it can be easily used.

B. Scope of Work. Provide all electrical work in accordance with the plans and specifications, in place complete, ready for operation.

C. Work by Others. Telephone instruments, cables and other accessories shall be provided by local electric company. Primary cables, transformers, meters, and final connection of service shall be provided by a local electric company. During bidding and construction, the Contractor shall coordinate his work with utilities and other trades to avoid omissions and overlapping responsibilities. The electrical Contractor shall notify other trades and suppliers of project voltages and of existing equipment when new work must be compatible with existing conditions.

D. Payment to Utility Companies. The Contractor shall arrange with utility companies and pay for service and any other work by them pertaining to the project unless otherwise specified.

For Hawaii only: The Department will arrange with utility companies and pay for the installation of telephone and electrical services.

E. Materials and Workmanship. Materials and equipment shall be new and those items listed by Underwriters' Laboratories shall bear the "UL" label of approval. Equipment surfaces in contact with water shall be in compliance with NSF 61.

1. Substitute Material. Substitute materials may be used if qualified under "Substitute Material" section. Submission shall be as follows:

Example:

Item	Manufacturer & Catalog No. Specified	Substitute Manufacturer & Catalog Number
Cable	Joe Doe – No. 3200	King - 2200

Qualifying data shall include catalog cuts, shop drawings and/or specifications to show equality with material specified.

2. Rules, Standards and Specifications. Applicable rules, standards and specifications of the following associations shall apply to materials and workmanship:

Edison Electric Institute (EEI)

National Electrical Manufacturers Association (NEMA)

Institute of Electrical and Electronic Engineers (IEEE)

National Board of Fire Underwriters (NBFU)

Illuminating Engineer Society (IES)

National Fire Protection Association (NFPA)

Insulated Power Cable Engineers Association (IPCEA)

U.S. Department of Commerce, National Bureau of Standards (National Electric Safety Code)

American Society for Testing and Materials (ASTM)

Underwriters' Laboratories (UL)

American National Standards Institute (ANSI)

3. Local Ordinances and Regulations. All materials and workmanship shall comply with local ordinances and regulations of the City or County. Workmanship shall be subject to approval of the Manager who shall be afforded every opportunity to determine skill and competency. Concealed work may be reopened at random during formal inspection by the Manager.

F. Relocation of Electrical Devices. Locations of outlets, switches, service runs, feeder runs, and other electrical devices as shown on building and site plans are approximate. Before installing, the Contractor shall study the construction details and make electrical installations in the most logical manner. Any location changes from the original plans must be approved by the Manager and shown on "as built" drawings. Any device may be relocated within ten (10) feet of the location shown on the original plans without additional cost to the Department.

G. Equipment Shop Drawings. The Contractor shall submit for approval six (6) copies of shop drawings or catalog cuts of the following equipment and shall resubmit until approval is received from the Manager:

Light Fixtures
Electrical Controlboard
Any Built-To-Order Equipment

304.04 PUMP STATION MECHANICAL EQUIPMENT.

A. Rubber-Seated Butterfly Valves and Manual Operators. The manufacturer of the rubber-seated butterfly valves and manual operators shall be a nationally advertised firm with at least ten years of experience in the design and manufacture of valves and operators of this type, and shall be as specified in the Detailed Specifications of the Special Provisions for each project.

1. Butterfly Valve. The butterfly valve shall conform in all respects with AWWA C504, Class 150B, unless otherwise stated in these specifications. The valve shall be for above ground service and shall be a flange, short body valve with a cast iron body. If the rubber seat is mounted on the valve body, the valve disc shall be made of Ni-Resist unless a stainless steel seat ring is furnished. End flanges shall conform in dimensions and drilling to ANSI 16.1 Class 125 cast iron flanges.

2. Manual Operator. The manual operator shall conform in all respects with AWWA C504, unless otherwise stated in these specifications. The maximum torque rating of the manual operator shall not be less than that specified in Table 1, Class 150B, of C504. The manual operator shall be furnished with a pointer-to-valve-position indicator and a handwheel. The operator shall be of the worm gear type with an alloy steel worm shaft and bronze worm gear. The operator shall be capable of holding the valve in any open position.

B. Metal-Seated Butterfly Valves. The manufacturer of the metal-seated butterfly valves shall be a nationally advertised firm with at least ten years of experience in the design and manufacture of valves of this type, and shall be as specified in the Detailed Specifications of the Special Provisions for each project.

The valves shall have wafer-type cast iron bodies. The valve discs shall be made of 316 stainless steel. The valve shafts shall be a one piece unit of 18-8 stainless steel, Type 303, 304, or 316, or approved equal, extending completely through the valve disc. Valve shafts of 17-4 PH stainless steel hardened at 900°F may be permitted in place of the 18-8 stainless steel, provided the supplier receives the Manager's approval of the shaft size prior to construction.

C. Check Valves. The manufacturer of the check valves shall be a nationally advertised firm with at least ten years of experience in the design and manufacture of valves, and shall be as specified in the Detailed Specifications of the Special Provisions for each project.

The check valves shall be flange with stainless steel springs, and bronze-bushed center-guides. The body of the check valves shall be either cast iron or semi-steel and shall have bronze trim.

D. Chlorinators. The manufacturer of the chlorinators shall be a nationally advertised firm with at least ten years of experience in the design and manufacture of chlorinators, and shall be as specified in the Detailed Specifications of the Special Provisions for each project.

E. Hydraulic Control Valves. The manufacturer of the hydraulic control valves shall be a nationally advertised firm with at least ten years of experience in the design and manufacture of such valves and shall be as specified in the Detailed Specifications of the Special Provisions of each project.

F. Mechanical Bolts and Nuts. All mechanical bolts and nuts shall be silicon bronze (ASTM F467 and F468) or stainless steel (ASTMF593 and F594, type 316).

SECTION 305 - BACKFLOW PREVENTION ASSEMBLIES

305.01 GENERAL.

Backflow prevention assemblies shall be furnished and installed as shown on the plans, as specified in the specifications, or as directed by the Manager. A backflow prevention assembly, is a device used to prevent the reversal of flow of water or mixtures of water and other liquids, gases or other substances into the distribution pipes of the potable supply of water from any source or sources.

All work shall conform to the Rules and Regulations of the Department and the "Uniform Plumbing Code" as adopted by the City or County or as modified herein.

Only reduced pressure principle assemblies and double check valve assemblies meeting AWWA C511 and C510, respectively, as amended, and pressure vacuum breakers meeting International Association of Plumbing and Mechanical Officials (IAPMO) Standards PS 31-71 as amended, approved by the Foundation for Cross-Connection Control and Hydraulic Research of the University of Southern California (FCCCHR-USC) shall be allowed.

For Kauai Only: Unless otherwise approved by the Manager, the construction plans, insofar as the backflow prevention assemblies are concerned, shall be on 22" x 36" tracing film or tracing paper. After receipt of the Manager's approval, four copies of the construction plans shall be submitted to the Department. The construction plans shall be as specified in Division 100, Section 112 - CONSTRUCTION PLANS.

305.02 INSTALLATION.

Details of the backflow prevention assembly showing both plan and elevation views including size and location of the assembly shall be submitted to the Manager for review and approval prior to installation.

The backflow prevention assembly shall be installed above ground on the property side of the property line and as close to the property valve or meter's emergency by-pass connection and before any branches, as physically possible. Connections or tees between the meter and the backflow prevention assembly will not be permitted without written approval by the Manager. Installation heights of backflow prevention assemblies shall conform to Table 300-17:

Table 300-17 - BACKFLOW PREVENTION ASSEMBLY HEIGHT		
Size of RP and DC Assemblies (Inches)	Dimension (Inches) Ground Level to Centerline Of Backflow Prevention Assembly	
	Minimum	Maximum
3/4 to 1½	18	48
2 to 3	24	48
4 to 6	30	48
8 to 10	36	48

Backflow prevention assemblies shall not be installed underground without written approval by the Manager. Approval for underground installations of the backflow prevention assemblies will be based solely on public safety.

If it is not possible to install the assembly as close as physically possible to the property valve or meter's emergency by-pass connection, plans indicating the new location including plan and elevation views shall be submitted to the Manager for approval.

In all cases, the backflow prevention assembly shall be installed in a horizontal, upright position, properly protected from external damage, in an easily accessible location, and in an area free of any obstruction within two feet surrounding the device. Drainage satisfactory to the Manager shall be provided.

The Manager shall determine the type of backflow prevention assembly to be used. Selection shall be based on the actual or potential threat of contamination or pollution to the public water supply (refer to the guidelines for Backflow Prevention Requirements).

The following guidelines relating to backflow prevention assemblies for irrigation systems shall apply:

1. Pressure Vacuum Breakers shall be installed at the beginning of each irrigation circuit and at a minimum of twelve (12) inches above the highest irrigation head on the circuit. Individual irrigation circuits having quick coupling valves or other similar type heads that will permit pressure to be retained in the circuit shall have a pressure vacuum breaker installed as a minimum requirement for each circuit.

   Irrigation systems using the subsurface drip method shall have a pressure vacuum breaker on each circuit.

A pressure vacuum breaker may not be installed where a double check valve assembly, reduced pressure principle backflow prevention device, or air gap separation is required. *(For Hawaii only: Pressure vacuum breaker is not approved for use.)*

2. Double Check Valve Assembly may be installed to serve multiple irrigation circuits in lieu of vacuum breakers on each individual irrigation circuit.

3. Reduced Pressure Principle Backflow Prevention Assembly or air gap separation shall be required before any piping network in which fertilizers, pesticides and other chemicals or toxic contaminants are injected or siphoned into the irrigation system.

305.03 TESTING.

Backflow Prevention Assemblies shall be tested by a certified Backflow Prevention Assembly General Tester acceptable to the Department at least once annually as prescribed in the Department's Rules and Regulations. The test shall be the responsibility of the consumer and failure of the consumer to make the proper test may, at the discretion of the Department, result in the Department making the tests, and charging the cost to the consumer, or termination of water service will be initiated.

305.04 PAYMENT.

Payment for furnishing and installing BACKFLOW PREVENTION ASSEMBLIES and appurtenances for the Department's facilities will be made at the Unit Price Bid per each unit, based on the actual number of backflow prevention assemblies and appurtenances installed and tested.

The Unit Price Bid for furnishing and installing BACKFLOW PREVENTION ASSEMBLIES and appurtenances shall be full compensation for all labor, materials, tools and equipment for all handling, unloading, excavating, placing, testing, grading and all other work required to install the backflow prevention assemblies and appurtenances, in place complete.

SECTION 306 - WELL DRILLING

306.01 GENERAL.

The work shall cover the drilling, casing and testing of wells and shall include the furnishing of all labor, materials, equipment and incidentals necessary to complete the well as shown on the plans and as specified in these Standards and in the Special Provisions.

In order to comply with requirements of the State Water Code, Chapter 174C, and DLNR Administrative Rules, Chapter 168 of Title 13, titled "Water Use, Wells, and Stream Diversion Works", and the Department's requirements on well locations, yield, size and spacing, the developer's engineer shall consult the Manager prior to proceeding with detailed plans and specifications.

306.02 MOBILIZATION-DEMOBILIZATION.

Upon receiving the notice to begin work, the Contractor shall convey to the job site as shown in the plans all well drilling equipment, casing, and other appurtenant materials and equipment for the satisfactory drilling, casing, test pumping and other required testing of the well as specified elsewhere in these Standards.

Demobilization shall commence upon the completion and acceptance of the well as specified elsewhere in these Standards.

A. Payment. Payment for MOBILIZATION-DEMOBILIZATION shall be made at the Lump Sum Price Bid as specified above and elsewhere in these Standards.

306.03 WELL DRILLING TO CASING DEPTH.

The Contractor shall drill wells complete and satisfactory to the Manager. The portion of each well to be cased shall be drilled to such a diameter as to permit the installation of a steel casing having a diameter as shown on the plans and leaving an annular space between the outside of the casing and the drilled hole of not less than 1½-inches. Bentonite or any similar material used in contract operations shall be used only upon approval of the Manager. A cleansing agent for the removal of bentonite or similar materials shall be used only with approval of the Manager.

During the progress of the work, the Contractor shall keep a log of each well and deliver to the Manager a sample of material taken at each change of formation or at a minimum of every 5 feet. The Contractor shall also submit a daily report describing the characteristics of materials encountered; the work done each day, such as depth drilled, casing set, etc.; the water level in the well at the beginning and end of each shift; observable details with reference to the entry of water into the well from the aquifer; and other such pertinent data as may be required by the Manager.

The Contractor shall, at all times during the progress of the work, shield the well in such a manner as to prevent persons from falling into or tampering with the well and to prevent entrance of foreign matter. The Contractor shall exercise extreme care in the performance of the Contractor's work in order to prevent the breakdown or caving of formations into the well. The Contractor shall comply with all NPDES requirements and other applicable regulations.

A. Payment. Payment for drilling the WELL to a depth extending from the finish ground elevation to the bottom of the casing as shown on the plans will be made at the Unit Price Bid for actual depth in feet of well drilled after the plumbness and alignment requirements have been satisfied.

The Unit Price Bid shall include full compensation for all materials, labor and equipment necessary to complete the well drilling to casing depth as required by the Manager and the furnishing of data as specified in these Standards.

306.04 WELL CASING.

Unless specified otherwise, the permanent casing shall be new steel pipe solid or perforated as shown on the plans conforming to AWWA C200, "Steel Water Pipe 6-Inches and Larger". The physical properties of the steel used in the fusion-welded pipe shall conform to and manufactured to meet requirements of ASTM A53, Type E or S, Grade B. Casing diameter shall be as shown on the plans and minimum thickness shall conform to Table 300-18.

The Contractor shall furnish and install temporary casing if necessary for the successful drilling of the wells and remove the same as directed by the Manager. Temporary casing shall be of such weight and design necessary to prevent entrance of undesirable material, to prevent cave-ins, to be reasonably water tight, and to permit its installation without distortion or rupture.

Table 300-18 - CASING THICKNESS	
Nominal Diameter (Inches)	Thickness (Inches)
2	0.154
2½	0.203
3	0.216
3½	0.226
4	0.237
6 to 8	0.280
10	0.322
12	0.375
14 to 20	0.375
20 to 26	0.500

For well diameters greater than 26-inches, casing thickness shall be as specified by the Manager.

Length of individual pieces shall not be less than 10 feet nor more than 40 feet except the last length at the top which shall be cut to suit. Individual lengths of casing shall be provided with beveled ends for butt-welding. Casing shall be cleaned of all scale, rust and oil.

Abutting ends of adjacent casing shall be welded. Welding shall be performed by mechanics previously qualified by tests prescribed in the American Welding Society Standard Qualification Procedure for this type of work. Technique of welding employed, the appearance and quality of welds and methods of correcting defective work shall conform to the American Welding Society Code for Arc Welding for Building Construction, Section 4, Workmanship. Surfaces to be welded shall be free from loose scale, rust, grease, paint and other foreign matter except that mill scale which will withstand vigorous wire brushing may remain. Joint surfaces shall be free from fins and tears. Adjacent lengths of casing shall be held in proper alignment while the joint is being welded.

A steel casing shoe shall be welded to the bottom portion of the permanent casing as shown on the plans.

The Contractor may make plumbness and alignment tests on the installed casing that the Contractor deems necessary prior to grouting. Satisfactory results of such tests shall not constitute approval by the Manager.

A. Payment. Payment for WELL CASING will be made at the Unit Price Bid for the actual lineal feet of casing installed after plumbness and alignment requirements have been satisfied.

The Unit Price Bid shall be full compensation for all materials, labor, tools and equipment necessary for the furnishing and installing of steel casing and shoe in place complete, including grouting of the annular space, as shown on the plans.

The Contractor shall receive no specific compensation for the furnishing, installing and removing of the temporary casing and all costs shall be in the various items in the Bid.

306.05 FILLING OF ANNULAR SPACE.

The annular space outside the casing shall be filled as shown on the plans or as directed by the Manager.

A. Grout. Grout shall consist of Portland cement and not more than six gallons of mixing water per cubic foot of cement. At the approval of the Manager, the alternate material for grout consisting of one part of Portland cement, one part of medium-grained clean sand and not more than six gallons of mixing water per cubic foot of cement may be used.

The grout shall be placed around the casing in one continuous operation, starting from the bottom of the space to be grouted towards the ground surface. Grouting shall be by a method approved by the Manager. The use of pump or air pressure for forcing the grout into place shall be employed if satisfactory results cannot be obtained by gravity placement. The grout shall be placed in a manner that will avoid segregation of materials, inclusion of foreign matter or bridging of grout materials. No drilling operation or other work in the well will be permitted within 72 hours after the filling of the annular space. If quick setting cement is used, this period may be reduced to 24 hours. The Contractor shall insure that no grout enters the open hole.

B. Payment. Payment for FILLING OF THE ANNULAR SPACE will be as specified in the Unit Price Bid for the actual lineal feet of well casing grouted.

306.06 PLUMBNESS AND ALIGNMENT.

The well shall be drilled circular and the casing set plumb and true to line. In compliance with this requirement, the Contractor shall furnish all labor, tools and equipment and shall conduct the test described elsewhere herein in a manner prescribed by and to the satisfaction of the Manager after the casing has been installed and the grout has set.

The "Totco" Directional Double Recorder may be used for the plumbness test only. Tests for plumbness and alignment shall be made in the presence of the Manager after the casing has been completely installed and grouted, and before its acceptance. Additional tests, however, may be made by the Contractor during the performance of the work.

Unless specified otherwise, plumbness and alignment shall, except as hereinafter modified, be in accordance with the requirements of the latest revision of AWWA A100 "Standard Specifications for Deep Wells". The maximum deviation from the vertical shall not be more than 2/3 X inside diameter of casing per any 100 feet of depth. A log of the drift at 20-foot intervals shall be kept for the well casing.

The alignment shall be tested by lowering a section of standard weight or heavier pipe 40 feet long, to the bottom of the casing. The outside diameter of the pipe shall be ½-inch or less than the inside diameter of the well casing. If a dummy is used, it shall consist of a 40 feet length of Steel Pipe with diameter as approved by the Manager, minimum wall thickness 3/8-inch, with 5 rings. The five rings shall be truly cylindrical, not less than ¼-inch thick, have a band width of 12-inches, have an outside diameter of the rings of ½-inch or less than the inside diameter of the well casing, and be spaced equidistant along the 40 feet length of pipe.

Errors of plumbness and alignment shall be corrected at the Contractor's own expense. The Manager may refuse to accept the well should the Contractor fail to make the necessary corrections.

A. Payment. The Contractor shall receive no specific compensation for making tests for plumbness and alignment and the costs of all such tests shall be included in the various items in the Bid.

306.07 ABANDONMENT OF WELL.

In the event that the Contractor fails to drill the well to the depth specified by the Manager or should the Contractor abandon the well because of imperfections in plumbness or alignment, loss of tools or for any other cause, the Contractor shall remove the casing if necessary and fill the abandoned hole with clay, rock, aggregate and cement grout as the Manager may specify.

A. Payment. The Contractor shall not be compensated for any work done on the well that is abandoned. Any partial payment made for work done on a well which is later abandoned shall be deducted from the amount which becomes payable for work done on a new well.

306.08 WELL DRILLING BELOW BOTTOM OF CASING.

After the filling of the annular space has been completed, well drilling below the bottom of the casing shall then be continued through the casing with a minimum diameter and to the elevation of the bottom of the well as shown on the plans or as modified by the Manager. Well drilling shall be as specified elsewhere in these Standards. Only rotary and cable tool methods are permitted. Only water may be used in drilling below the casing unless approved by the Manager.

A. Purging of Well. The well shall be purged clean to the satisfaction of the Manager and shall be performed at the completion of drilling to the bottom of the well as shown on the plans or any additional drilling as directed by the Manager.

B. Payment. Payment for continuation of WELL DRILLING below the bottom of the casing to the elevation of the bottom of the well as shown on the plans or as modified by the Manager will be made at the Unit Price Bid for the actual lineal feet of depth drilled.

Purging shall be incidental to the project and the cost thereof shall be included in the various items bid in the Bid.

The Unit Price Bid shall be full compensation for all materials, labor, tools and equipment necessary to compete the well drilling as required, inclusive of the purging, the furnishing and introducing of the cleansing agent, and the furnishing of data as specified elsewhere in these Standards.

306.09 ADDITIONAL WELL DRILLING, CLEANSING AND TESTING.

The Manager may order the Contractor to drill the well below the final depth as shown on the plans or the final elevation as determined in the field, in increments as specified by the Manager. The method and procedure for this additional well drilling shall be as specified elsewhere in these Standards.

It shall be understood that whenever additional drilling is called for, the Contractor shall, upon completion of additional drilling, conduct purging operations as directed by the Manager.

A. Payment. Payment for additional drilling will be made at the same Unit Price Bid as WELL DRILLING below bottom of casing for the actual lineal feet or depth drilled below the final depth as shown on the plans or final elevation as determined in the field. The Unit Price Bid shall be full compensation for all labor, materials, equipment, tools and incidentals necessary to complete the drilling as required inclusive of purging and the furnishing of data as specified elsewhere in these Standards.

306.10 WELL CLEANSING.

Preparatory to pumping tests, the Contractor shall pump and surge the well as specified hereinafter.

The cleansing process of pumping and surging by starting and stopping the pump intermittently, shall continue until the water pumped from the well is substantially free from sand, stones, drill cuttings, clay, foreign materials, and until the turbidity is less than 10 on the silica scale as described in Standard Methods of Water Analysis.

The Contractor shall then pump continuously for a period of 30 minutes and at a rate as specified in the Special Provisions. This 30-minute pumping is repeated until the water pumped remains clear throughout the period of 30 minutes. The Contractor shall provide suitable equipment and devices approved by the Manager to measure the discharge from the well in gallons per minutes.

The cleansing of the well shall not be considered completed if sand, stones, drill cuttings, clay or foreign materials drop into the well after 30 minutes of continuous pumping.

In the event that bentonite or any similar materials is used in the contract operation, an approved cleansing agent may be introduced and shall be allowed to remain in the well for a minimum period of 24 hours, after which the well shall be purged by pumping. Pumping shall continue until the well is free of mud and detergent.

The cleansing process shall be conducted upon the completion of any additional drilling as authorized by the Manager.

The cleansing operation shall be incidental to the project and the cost thereof shall be included in the various items in the Bid.

306.11 SET-UP FOR YIELD-DRAWDOWN AND SUSTAINED PUMPING TESTS OF WELL.

This item of work shall consist of furnishing, installing and removing pumping units, discharge lines and devices for measuring flow and drawdown and all other incidentals necessary for the proper testing of the well for yield-drawdown and sustained pumping.

A. Pumping Unit. The pumping unit installed for the pumping tests shall receive sound attenuative treatments to conform to the applicable regulations of the County or State Department of Health. All units shall meet the head and capacity requirements called for in the Special Provisions.

B. Payment. Payment for set-up for YIELD-DRAWDOWN and SUSTAINED PUMPING TESTS OF THE WELL will be made at the Unit Price Bid per set-up. A set-up shall be the complete installation and removal of the pump and all necessary appurtenances for the proper testing of the well as directed by the Manager. Payment shall represent full compensation for the furnishing of all labor, materials, tools, equipment and incidentals required for the installation and removal of equipment to conduct pumping test as called for elsewhere in these Standards.

No separate payment for any adjustments or changes to equipment for the proper testing of the well will be made; the compensation for such work shall be deemed to be included in the Unit Price Bid.

The testing of the pumping unit prior to the yield-drawdown tests shall be considered incidental and the cost thereof shall be included in the Unit Price Bid per set-up.

It shall be understood that whenever the Manager authorizes any additional tests, the Contractor shall perform the necessary operations for each additional set-up, if required, and payment thereof will be made at the Unit Price Bid per set-up.

306.12 TESTING FOR YIELD-DRAWDOWN AND SUSTAINED PUMPING.

After the cleansing operation on the well has been approved, the Contractor shall make the necessary arrangements for conducting a yield-drawdown test. The Manager may order the Contractor to make such additional yield-drawdown tests as the Manager deems necessary. All tests shall be run with similar equipment and in a manner identical to that hereinafter described.

During the test, samples shall be taken and tested for the Department of Health's Engineering Report. Testing shall be by a certified laboratory.

During each test, the Contractor shall conduct a continuous pumping and observation operation to determine the yield-drawdown and chloride content. The Contractor shall furnish and install a pump capable of pumping at the rate specified in the Special Provisions. The discharge piping shall be properly supported.

The Contractor may use any power source that the Contractor chooses for operating the pump. The pumping unit shall be capable of operating uninterrupted for a period as specified in the Special Provisions and shall be within the sound pressure levels for each octave band frequency as specified in the applicable County regulation and Occupational Safety and Health Act.

The Contractor shall provide suitable equipment and devices to measure the water level in the well under static and operating conditions, to measure the discharge from the well in gallons per minute, and to control the rate of flow from the well. The type of equipment and method to be employed in measuring the discharge from the well shall be subject to the approval of the Manager, prior to the installation of the pump.

The duration of pumping at each rate for the yield-drawdown tests shall be long enough to allow the water level in the well to stabilize. Sufficient time shall be allowed to make all necessary adjustments, measurements and collection of water samples. Minimum duration of the test shall be as set forth in the Special Provisions.

During each test, water table elevations and rates of pumping shall be determined at such intervals as the Manager may direct. The Contractor shall take water samples for determination of chloride content as the Manager may request and be responsible for security of test equipment during the testing period.

A. Payment. Payment for testing for YIELD-DRAWDOWN and SUSTAINED PUMPING will be made at the Unit Price Bid per hour in the Bid for the total number of hours of actual pumping. The hours of pumping to be paid for shall be the number of hours of actual pumping from the beginning to the end of the tests as directed and verified by the Manager.

Payment shall not be made for any premature termination of pumping tests due to failure of pumping equipment and appurtenances.

The Unit Price Bid shall be full compensation for all labor, materials, tools, equipment and other incidentals necessary to complete the tests.

It is understood that the Contractor shall perform additional tests whenever ordered by the Manager at the same Unit Price Bid per hour in the Bid. Each test shall be run with similar equipment in accordance with the procedure described elsewhere in these Standards.

306.13 WELL COMPLETION.

The well shall be cleaned out and all foreign matter removed, including all oil in the well, to attain the final depth as shown on the plans or as modified by the Manager and a welded cap as shown on the plans shall be provided and installed before approval is granted to remove the drilling machine and equipment.

A. Payment. Payment for the WELDED CAP will not be made directly and shall be included in the various items in the Bid.

306.14 CLEAN-UP.

At the completion of the subject, the Contractor shall remove all blocks, pipes, materials not incorporated in or necessary to the completed well and leave the site in a neat and orderly condition satisfactory to the Manager.

A. Payment. No separate payment for CLEAN-UP will be made; the compensation for such work shall be deemed to be included in the various Unit Price Bids for the items of which it is a part.

SECTION 307 - LANDSCAPING AND IRRIGATION

307.01 LANDSCAPING.

A. Description. This item of work shall include the furnishing of all materials, equipment, tools and labor necessary for planting of plant materials, protection, maintenance, guarantee and all related items required to complete the work as shown on the drawings and as specified in these Standards in place complete. All landscaping shall follow xeriscape principles in design and construction by specifying plants that will thrive in the natural environment of the project location.

B. Demolition. Remove and dispose of existing plants and ground cover, including its root system as indicated on the plans.

C. Materials.

1. Plants.

a. Trees and Shrubs

i. Nomenclature and Horticultural Practices: All trees and shrubs shall be true to name. The scientific and common names shall follow the standard as adopted by the American Committee on Horticultural Publication No. 50 "In Gardens of Hawaii," published by the B.P. Bishop Museum. Horticultural practices shall conform with the rules and grading as adopted by the most recent edition of the American Standard of Nursery Stock.

ii. Quality and Size: All plant material shall be uniform and have a habit of growth that is normal for the species and shall be sound, healthy, vigorous and free from insect pests, plant diseases and injuries. They shall have normal, well developed branch systems, together with vigorous root systems. All materials shall be equal in size or exceed the measurements specified in the Plant List, which are minimum acceptable sizes. The height of plants shall be measured from crown to ground level when the branches are in normal position. Any necessary pruning shall be done at time of planting and as specified elsewhere in these Standards.

iii. Care of Plants: Plants shall be handled so that the roots and trunks are protected at all times. Plants, once delivered, shall be watered daily. Under no condition shall uncanned or root balled plants be left unplanted through the day of delivery.

iv. Plant List: The plant list shall be as shown on the plans.

b. Ground Cover

i. Grass and Seeds: Grass shall be true to name and character of the plant as indicated on the drawings. Seeds shall be of fresh grade and shall be 50% hulled and 50% unhulled.

ii. Vines and Sprigs: Vines for ground coverage shall be specified as indicated on plan and shall be the crawling type with strong rooting system to provide protection of the soil from erosion by storm water flow and shall require minimum amount of care. Sprigs shall be healthy rooted living runners and stolons. They shall be freshly dug and free from weeds. Immediately following harvesting, the sprigs shall be thoroughly watered, then covered and kept moist during storage, transportation and until planted.

iii. Sod: Commercially Grown Sod.

2. Soil.

a. Soil shall be screened (½ inch screen), fertile, friable soil reasonably free of stones, noxious seeds, roots, bulbs and weeds.

b. The Contractor shall submit to the Manager, a typical sample of the soil considered for delivery to the site, and at the Contractor's expense, provide at the time of delivery of the sample a complete soil analysis together with a schedule of nutrients and frequency of application of all fertilizers and amendments necessary to bring it up to the level recommended by the Agricultural Extension Service for the satisfactory growth of turf grasses, ground covers, trees and shrubs and approved by the Manager. Upon delivery, the Manager reserves the right to reject the soil should the delivered soil not meet the approved sample. In the event there is to be more than one source of supply, the above requirement shall pertain to each source. The Contractor shall submit a list of the Contractor's soil sources to the Manager for approval.

c. All soil to be imported shall be of identical, uniform composition and structure throughout.

3. Fertilizers. The Contractor shall furnish and apply such fertilizers and amendments at the rates and frequencies determined by the above requirements. Addition of fertilizers and amendments shall be done after delivery of soil to the site and shall be done in such a manner as to achieve a complete homogeneous mix.

a. Manure shall be stable or cattle manure free from seeds, weeds, refuse and other material harmful to plant growth.

b. Commercial fertilizer shall be slow release, encapsulated, coarse granular form, and shall bear the manufacturer's guaranteed statement of analysis and shall also comply with the chemical analysis specified in the special provisions or as shown on the plans. Fertilizers shall be delivered to the site in original, unopened container. Any fertilizer which becomes caked or otherwise damaged, making it unsuitable for use, will not be accepted. Unsuitability shall be as determined by the Manager.

4. Miscellaneous Materials.

a. Stakes, guys and tree ties shall be as called for on the plans or as specified in the Special Provisions.

b. Water for hydromulching shall be free from noxious chemicals, essentially neutral, and in a quantity sufficient to cause good and healthy plant growth. Water and watering devices shall be provided by the Contractor.

c. Lime, when specified or indicated by soil analysis shall be hydrated lime, finely ground and broadcast at the rate mandated by the soil analysis report.

d. Mulch material may be dyed or undyed, natural, especially processed fibers that have the ability to retain moisture, form a retentive mat and aid and support plant growth.

5. Substitution. Substitution of plant materials will be permitted only upon submission of application. Substitution shall be done without additional cost to the Department and only after obtaining the approval of the application by the Manager. Substitutions shall be the nearest obtainable size or variety of plant having same essential characteristics.

D. Planting.

1. Trees and Shrubs.

a. Trees and shrubs shall be planted in accordance with the landscape plan. Each tree and shrub location shall be flagged prior to planting. The final location shall be determined only after receiving approval of the Manager.

b. Plant Preparation: The Contractor shall exercise extreme care in extricating trees, shrubs or other plants from their containers or the ground for planting so as to reduce the element of shock and not to stunt or kill the plants. Sufficient amount of roots and soil shall remain intact to insure proper growth. Pruning, when necessary, shall be done to keep the plant alive and to reduce the evapo-transpiration rate of the plant.

c. Planting Pits: Reasonable care shall be exercised to have pits dug and soil prepared prior to moving plants to their respective locations for planting to ensure that they will not be unnecessarily exposed to drying elements or to physical damage. The depth of pits for trees and shrubs shall be sufficient to accommodate the ball of roots when the plant is set to finished grade, allowing for at least twelve inches of prepared soil in the bottom of the pit. Width of pit shall be at least two feet wider than the ball of soil surrounding the root system.

d. Setting Plants: All plants shall be set at such a level that, after settlement, they bear the same relation to the finished grade of the surrounding ground. Each plant shall be set upright and faced to provide the best appearance possible.

e. Planting: Plants shall be planted in an approved backfill which shall be thoroughly settled by watering and tamping. Backfill for all plants shall consist of one part well rotted manure to four parts of topsoil, unless otherwise indicated on the drawing. The manure and topsoil shall be thoroughly mixed together before being placed in the plant pit.

f. Guying and Staking: Trees and shrubs shall be supported immediately after planting as detailed on the plans. Wind screen netting shall be placed to protect the newly planted tree and shrub, as detailed on the plans.

g. Pruning: Pruning of trees and shrubs shall be limited to the minimum necessary to remove injured twigs and branches, and to compensate for the loss of roots during transplanting, but never to exceed one-half of the branching structure. Cuts of branches over ½-inch in diameter shall be painted with an approved asphalt tree paint.

h. Watering: All plant materials, when properly located in holes, shall be firmly set by a tamping of backfill material and immediately handwatered.

2. Ground Cover.

a. The Contractor shall remove all existing grass and vegetation by manual or chemical methods prior to planting.

b. Existing ground and cut slopes which are to be planted with ground covers and which do not require imported topsoil shall be scarified or disked to a depth of 6 inches. The loose soil shall be worked until the ground is uniform in texture.

c. On embankment slopes, cultivating and/or spreading of topsoil will not be required unless specified in the Special Provisions.

d. All planting areas shall be at subgrades before spreading of 6 inches amended, screened soil. Place topsoil as specified with amendments as required.

e. Complete fine grading to the finished grade as shown on the plans.

f. An inspection shall be held upon completion of the fine grading just prior to planting. All abrupt transitions and unsmooth work shall be redone until approved by the Manager.

g. Planting of ground cover shall commence immediately after the soil has been prepared and approved for planting.

h. The Contractor may elect to plant ground cover by either sprigging, seeding, hydromulching, or sodding unless otherwise indicated on the drawings.

i. Planting of Sprigs: Sprigs shall be planted in furrows spaced not more than 6 inches apart, approximately ½ inch deep and placed perpendicular to drainage lines and parallel to contour on slopes. Sprigs shall be distributed in furrows, immediately covered with a light layer of soil and lightly rolled and watered. Further hand grading will be required if undulations appear after rolling. Resprigging of thin areas shall be required of the Contractor at no additional cost to the Department.

   The ground shall then be watered immediately after rolling and kept continuously moist to the depth of the planted sprig until ground cover is established. Watering shall be controlled to avoid erosion.

j. Planting by Seed: Ground surface shall be raked to a smooth even plane, broadcast seeds uniformly by mechanical sower at a minimum rate of 5 lbs. per 1,000 square feet. Sow seed in a grid pattern with one-half the seeds in one direction and the remainder at right angles to the first direction. The seeds shall be incorporated to the top 1/4 to ½ inch of soil. After sowing, the seeded area shall be compacted by hand or mechanical roller weighing 60 to 90 pounds per lineal foot of roller.

   The area shall be thoroughly and gently watered to avoid erosion and kept moist until the plant is established.

k. Planting by Hydromulching: Mixing shall be done in proportions as specified in the special provisions of the specifications, or on the plans. Application shall be made on a continuous basis, in one operation, to obtain an even planting. Every attempt shall be made to apply the material with the nozzle and not by hand. The area shall be thoroughly and gently watered to avoid erosion and kept moist until grass is established.

l. Planting by Sodding: Soil shall be graded to 6 inches below finish grade. Sod shall be laid in one direction with all edges butt jointed and with transverse joints staggered, and longitudinal joints aligned. At headers, curbs and discontinuous edges, cut sod 3 inches beyond limit of grassing and fold excess sod under sod strip. After the sod has been laid, roll sod with 50 pound roller and apply water. The ground shall be kept continuously moist to the depth of the sod until grass is established.

E. Planting Maintenance.

1. General. Maintenance shall begin immediately after completion and approval of all planting and shall continue for 90 calendar days thereafter. The care of plants prior to completion of entire planting shall not be considered as part of the maintenance period, but only as an incidental to landscape work. In the event any planting is replaced, the maintenance period for such planting shall be 90 calendar days after replanting is completed.

Maintenance shall include watering, weeding, fertilizing, topdressing, mowing, repairing soil surface, regrassing, repairing stakes, guys and ties, spraying for disease and insects, replanting and any other work necessary to maintain all plants in a healthy growing condition. The Contractor shall be responsible for the protection of all plants and planting area during the maintenance period. During the last week of the maintenance period, the Contractor shall fertilize the entire planting areas as specified or as directed by the Manager.

2. Watering. Each tree, shrub and ground cover areas shall be hand watered at time of planting and immediately after each application of fertilizer at the specified periods. Care should be taken to assure that fertilizer is completely washed off from leaves to avoid burning.

Daily watering throughout the maintenance period (using irrigation system, if desired) shall be the responsibility of the Contractor.

3. Weeding. All planting areas shall be kept free of weeds throughout the maintenance period.

4. Mowing. The Contractor shall begin mowing lawn when grass is 1½ inches high. Do not cut more than half the height of the grass at any one time. Use only sharp mower.

5. Repairing Soil Surface and Regrassing. When any portion of the surface becomes gullied or otherwise damaged or ground cover has failed to grow within the maintenance period, the aforementioned planting procedure shall be repeated to bring the damaged area up to the standards desired.

F. Clean Up. The Contractor shall keep the work areas free from accumulation of waste material or rubbish. Upon completion of the work, the Contractor shall remove all waste material or rubbish from and about the work area together with all tools, equipment and materials and shall leave said area in a condition satisfactory to the Manager.

G. Protection. The Contractor shall exercise extreme care in the execution of the Contractor's work and shall in no way adversely affect the work of others or adjoining properties.

H. Final Inspection and Acceptance.

1. At the completion of all planting operations and a 90-day maintenance period, an inspection shall be performed.

2. The Contractor shall request the inspection in writing to the Manager seven (7) working days prior to the completion of the maintenance period in order that a mutually agreeable time for inspection may be arranged.

3. The Contractor and the Manager, or their representatives shall be present at the inspection.

4. After the maintenance period of 90 calendar days, the Manager will recommend acceptance of the landscape work subject to the following conditions:

   a. All plant materials must exhibit satisfactory growth progress and have evidence of a sufficient degree of maintenance as determined by the Manager.

   b. The site must be thoroughly cleaned and all excess material removed.

   c. Any dead plants and plants not in a vigorous, thriving condition at the time of the final inspection shall be replaced.

   d. Plants used for replacement shall be of the same kind and size as originally specified; they shall be planted, maintained and guaranteed as specified elsewhere in these Standards.

   e. The cost of replacement under all circumstances shall be borne by the Contractor, except for possible replacement resulting from removal, loss or damage due to occupancy of the project, vandalism or other acts of negligence by others.

5. All defects observed at the time of final inspection must be corrected to the satisfaction of the Manager prior to acceptance of the landscape work.

6. Acceptance of the ground cover planting after the 90 days maintenance period shall be contingent upon the following:

   a. 90% germination of the overall area shall be required for ground cover planting. Each bare spot shall not be greater than 9 sq. ft. in any one sector.

   b. All germinated areas shall be healthy and living at the end of 90 days.

c. Weeds shall not exceed an area greater than 10% of the overall ground cover area.

7. The maintenance period shall be extended at no additional cost if the ground cover planting does not meet the above requirements.

8. If all plant materials are approved and accepted at this inspection by the Manager, the Contractor shall be relieved of further maintenance.

9. The landscaping and landscape maintenance shall not be accepted as individual entities. These items shall be accepted as part of the entire project.

I. Payment. Payment for LANDSCAPING, LANDSCAPE MAINTENANCE and appurtenant work shall be paid for in the Lump Sum Bid Price. Payment shall represent full compensation for furnishing all materials, labor, tools, equipment and incidentals required to complete landscaping and appurtenant work at the project site, in place complete.

307.02 IRRIGATION.

A. Description. This item of work shall include the furnishing of all labor, materials, tools and equipment and obtaining necessary permits, to install the irrigation systems (automatic), in place complete and in an operative condition, as shown on the plans and as specified in these Standards.

B. Explanation and Precedence of Drawings.

1. Demolition.

a. Existing sprinklers, valves, and controllers to be removed, cleaned and returned to the Department.

b. Demolish all valve boxes and backfill holes.

c. Remove existing exposed irrigation piping and existing underground irrigation piping and sprinkler heads in the way of new irrigation system or xeriscaping work.

d. Abandon all other piping in place.

2. General.

a. For clarity and legibility, irrigation layout is essentially diagrammatic and, although size and location of equipment is drawn to scale, wherever possible, the Contractor shall make use of all data in the contract documents and shall verify this information at the site.

b. Irrigation system layout, inclusive of lines, heads and emitters, shall be flagged for approval prior to actual equipment installation. Final installation of the irrigation system shall be made only after approval of the layout has been received from the Manager.

c. All work called for on the drawings by notes shall be furnished and installed whether or not specifically mentioned in the specifications.

d. Site improvement details, if shown on the irrigation plans, are not a part of this contract unless specifically stated and included.

e. All requirements of the State, the County and the Department Codes, Regulations and Standards governing this work shall be met, providing that any requirements of the drawings and specifications not conflicting therewith, but exceeding the aforementioned Codes and requirements shall govern.

3. Pressure Lines. The term Pressure Lines as used in these specifications shall mean all irrigation lines other than Drip Irrigation lines 3/8-inch and smaller.

4. Test Spacing. The Contractor shall provide a test head to each planting area grade change and soil type on the site. The test head shall be used to determine the actual spacing required due to slope, soil texture, etc., for the planting involved. This work shall be performed prior to the flagging operation under item 307.02.B.2.b above.

C. Materials.

1. General. Materials furnished and/or incorporated into the work shall be new and of the best grade of each respective kind unless otherwise noted on the plans. All items of one type shall be by the same manufacturer.

Trench backfill material shall be on site or imported select material as specified in Section 302.03 - TRENCH BACKFILL, and shall be approved by the Manager before use. Cost of importing approved backfill material shall be considered incidental.

2. Pipe. PVC pipe shall be Schedule 40 or better for all pressure lines and fittings under paved areas. In addition, all pipes under paved areas shall be placed within conduits of appropriate size as detailed on the drawings. Plastic pipes for mains and plastic pipes 2½-inches diameter and larger shall be virgin material PVC Schedule 40 ASTM Type 1, Grade 1 NSF approved, conforming to ASTM D1785, or better. Two (2) - three (3) feet samples of each diameter size shall be submitted for approval prior to installation. Plastic pipe 2-1/4-inches diameter and smaller shall be virgin material PVC Schedule 40, Type 1220, NSF approved. Two (2) - three (3) feet samples of each diameter size shall be submitted for approval prior to installation. PVC pipe shall be Class 160-SDR 26 or better for all nonpressure lines and fittings.

All risers shall be threaded polyethylene or PVC Schedule 80, or approved equal in the sizes shown on the plans. Fittings and adaptors shall be as shown on the plans. Plastic pipe fittings and connections shall be as per manufacturer's requirements unless otherwise noted on the plans or an approved equal.

Heavy tapped coupling with brass bushing shall be used where applicable.

All fittings shall be new of 100% virgin material and of the same material as the pipeline or as specified in the plans and shall withstand a minimum working pressure of 200 psi. Six (6) copies of the Certification of conformance shall be supplied to the Department prior to use on projects.

3. Valves. Irrigation system control valves shall be valves designed as sprinkler control valves. Unless otherwise specified, no gate valves shall be allowed as control valves. Globe or gate valves may be used upstream of the sprinkler valve as a temporary shut off valve only. All globe and gate valves 3-inches and smaller shall be 125 lbs. test, all brass, screw and non-rising stem, Stockham B-16 or an approved equal.

Globe and gate valves shall be the same size as the pipelines in which they are installed and shall be located as shown on the plans.

Remote automatic control valves shall be of a style and type that is compatible with the designated controller. Proof of compatibility shall rest with the supplier of the valves. Valves shall be of the normally closed type. Valves in PVC Ring-Tite pipes shall be hub-end with rubber ring type connection.

4. Valve Boxes. Valve boxes shall be rectangular 25"x16" cast concrete type X meter boxes and covers, and 10-3/8-inch circular cast concrete type "A" valve boxes with concrete covers, both marked as water valves, as manufactured by HC&D or approved equal. Rectangular valve box shall be for valves 2-inch and larger and circular valve box shall be for valves 1½-inch and smaller. One valve per box.

5. Solvent Cement. For all pressure line connections on pipe smaller than 1½-inch use Weld-On #P70 Primer, then Weld-On #710 for the connection. For nonpressure lines, use suitable cleaner for the pipe, such as MEK or Acetone, then the Weld-On #710. Super solvent shall be used for emitter lines.

6. Vacuum Breakers. Pressure vacuum breakers shall be approved for use by the Department and the City or County Building Department and shall be the size of the lines they serve.

7. Double Check Valve Assemblies. Double check valve assemblies shall be those assemblies meeting AWWA C510 or as amended.

8. Reduced Pressure Principle Backflow Prevention Assemblies. These assemblies shall be those meeting AWWA C511 or as amended.

9. Pressure/Regulators. Set to pressures as shown on the drawings. Devices for use on pressure lines shall be 500 YSBR as manufactured by Wilkins Regulator Co. or approved equal.

10. Filter Unit. Y screen filter shall be stainless steel, bronze or brass with #150 - #200 mesh screen. Remove plug and attach a petcock valve.

11. Irrigation Controller. The irrigation controller shall be the style, type, size, brand, and in the location as indicated on the plans. Unless otherwise directed by the Manager, irrigation control panel shall have a minimum of 8 stations, pedestal or wall mounted, in a weatherproof vandal resistant case. No exterior transformers of the plug-in type will be allowed. All controls must have built-in transformers and be Underwriter's Laboratories approved for all weather service. All significant components, parts and control shall be as specified by the manufacturer's specifications. Controllers shall be for normally closed operation.

12. Flow Meters. Meter shall monitor water flow to entire irrigation system, and send data to irrigation controller. Meter shall be shown on plans or approved equal.

13. Control Wires. Control wires shall be as follows:

a. All control wire shall be solid core conductor AWG, type UF underground feeder, in accordance with ASTM B3. Each conductor shall be insulated with proper thickness of ICC-100 compounded installation as per Underwriters' Laboratories specifications.

b. Control wire sizes and approximate lengths shall be in accordance with manufacturer's recommendations.

c. All control wires shall be placed within conduits, color coded, and placed adjacent to the sprinkler pipe unless otherwise noted. All color-coding shall be engraved on a DIELECTO Plate and installed within the controller.

d. All wire splices and connections shall be made and placed in junction boxes and shall have waterproof, epoxy-coated fittings.

14. Emitters. Emitters for drip irrigation systems shall be as shown on the plans or approved equal.

15. Sprinkler Heads. Sprinkler heads shall be as designated on the plans or approved equal.

16. Rain Sensor. Sensor shall monitor rainfall and shut off system when rainfall exceeds 0.25 inches. The device shall be shown on the plans or approved equal.

D. Substitutions. All materials shall be of the make and quality listed above or as shown on the plans. Any request for substitutions shall be submitted in writing for approval by the Manager not later than 10 calendar days prior to bid opening. Substitutions shall be equal or superior to that specified. Proof of equality shall rest with the requestor, and the decision of the Manager shall be final. Approval of requestor's substitution and any changes as a result of this approval shall be at no additional cost to the Department.

E. Responsibilities shall be as follows:

1. Sleeves, Conduits, Chases: Sleeves, conduits and chases under driveways for pipes and control wires, through building walls for wires, under walks and other paved areas shall be the responsibility of the Contractor. All sleeves, conduits and chases under slabs shall be plugged and marked at both ends of run. Sleeves, conduits and chases shall extend 18 inches beyond the obstructions.

2. Point of Connection (POC) for the drip system valve connections shall be as marked on the plans and each POC shall have a valve with female threads.

3. 110 Volt Supply to the Controllers: The Contractor shall provide 110V supply voltage 60 cycles on a 20 amp circuit and provide for a direct connection into the controller.

4. Water Meter Costs and Application for Installation: The location of the water meter shall be as shown on the plans. The Contractor shall apply for the water meter, mark, excavate, and backfill the location for the Department.

5. Orientation: The irrigation Contractor shall explain the controller operation and sprinkler operation to the Manager. Contractor shall also include a parts list and operators manual.

F. Construction. The construction and installation of irrigation system shall be as follows:

1. Condition at Site: The Contractor shall visit the site, examine the existing conditions and the extent of work involved for the completion of the work as detailed on the drawings and as specified in these Standards.

   Any discrepancies between the irrigation system design, building and land configurations that will affect the performance of the system shall be brought to the attention of the Manager prior to submitting the bid.

2. Permits, Notices, etc.: The Contractor shall procure and pay for all necessary permits or certificates that will be required in connection with this work.

3. All equipment and tools to be used shall be steam cleaned prior to coming to the job site. Trenching machines and lawn mowers shall be thoroughly cleaned so that no noxious weeds are introduced to the job site. Installation of the materials and workmanship shall conform to the manufacturer's recommendations, unless specifically modified herein.

4. All connections relative to backflow prevention shall be made to comply with local codes and ordinances.

5. Damages - Above Ground: The Contractor shall protect from damages all signs, plants, grass, walks, pavements, buildings, structures, etc. Any damage shall be repaired or replaced by the Contractor to the satisfaction of the Manager at no additional cost to the Department.

6. Damages - Below Ground: The Contractor shall verify the location of any underground utilities and obstructions and make whatever provisions necessary to preserve underground utilities. Any damage to utilities shall be repaired as soon as possible to the full satisfaction of the utilities involved at no additional cost to the Department.

7. The irrigation system layout as shown is diagrammatic and measurements are approximate unless detailed. Pipe sizing shall be as shown. Contractor shall flag all valves, sprinkler heads, major intersections, etc. to receive approval from the Manager prior to actual installation.

8. Pipe - Excavation for Installation: Excavation for pipe for nonpressure lines shall be sufficient to provide 6 inches of cover over the top of the pipe, 12 inches of cover over pressure lines and 18 inches of cover for all lines under paved areas, except as shown on the plans. Trenching operation shall be done either by mechanical trenching machine or backhoe.

   Trenches shall be dug to maintain as straight a pipeline profile as possible for the length of the run, be straight sided and in the case of jacking under walks and pavements, as small as possible. No trench shall be excavated in such a manner that the trench section appears triangular or trapezoidal. Any trench excavated in an objectionable manner shall be backfilled and recompacted before retrenching. Trenches shall have a minimum width of 4 inches plus the outside diameter of the pipe.

   All lumber, rubbish and large rocks shall be removed from the trenches. Pipes shall have a firm, uniform bearing for the entire length of each pipeline to prevent uneven settlement. Cushion the trenches with S4C or sand if the soil is rocky for all pressure lines and lines under paving. A 4-inch cushion shall be provided both under and over the top of these lines. Excavated material may be used if free from rocks and debris.

No decomposable material shall be used as backfill where structures, pavement or vehicular loadings are expected. The Manager reserves the right to have the trench over excavated 3 inches and filled with approved material at no additional cost to the project should the trench bottom contain rocks or other objectionable material.

Backfilling of pressure and nonpressure lines under paving shall be done by puddling the first 1/2 of the trench, then using a mechanical compactor for the top half. Pressure lines and nonpressure lines in planting area are to be backfilled with sufficient care to prevent settling and to be mounded slightly over the trench. Loose soil shall be placed in layers of six to eight inches and compacted by tamping after each layer. Any settling of the ground over the irrigation system up to 30 days and after acceptance of the system shall be rectified by the irrigation Contractor at no additional cost to the Department. Before testing, all pipe joints shall be left uncovered and only after the acceptance of the test shall the pipe joint sections be backfilled. Where irrigation systems are laid in existing vegetated areas, the trenches, upon being properly backfilled shall be topsoiled 6 inches thick, completely revegetated by use of seed, sod or stolons unless otherwise noted in the plans and maintained by watering, weeding and fertilizing for a period of ninety (90) calendar days so that the revegetated growth can be established.

In areas of other improvements such as concrete walkways or other type of pavement areas, etc., the trench upon being backfilled shall be restored with similar and like materials and smoothly phased-in to match the existing condition.

The Manager shall reserve the right to have any work on trench restoration corrected when, in the Manager's opinion, the work was not done properly and satisfactorily, at no additional cost to the Department.

9. Valves: Prior to installing the irrigation control valves, the pressure line shall be flushed under full pressure to insure the removal of all debris. Only schedule 40 male adapters shall be used before and after the valves for plastic lines. Valves shall be installed plumb and with sufficient spacing for servicing. A gate valve shall be installed before each series of manual irrigation valves and at all tees or crosses within the system. A gate valve shall be installed before each individual automatic irrigation valve.

   Remote automatic valves shall be mounted plumb and true and with leads neatly tucked out of the way.

10. Valve Boxes: Valve boxes shall be installed flush with the finished grade in lawn areas. Valve boxes located in shrubbery or ground cover areas, shall be installed 3 inches above ground. The bottom of boxes shall be leveled with tile, brick or concrete.

11. Solvent Cement: All solvent welded joints shall be installed in strict accordance with the manufacturer's recommendations. Prepare all pressure connections with Weld-On #P70 primer, then use Weld-On #710 or approved equal for the actual connection. For nonpressure lines, use suitable cleaner for the pipe connections such as MEK or Acetone, then use Weld-On #710 or approved equal.

    Super solvent: Use Super solvent on all emitter line connections. Using welded joint connection to attach emitter lines, first drill ¼-inch hole into PVC laterals. Dip emitter line 1/4 inch deep into Super solvent while closing other end of tubing, shake off excess solvent to break film covering tubing orifice. Fit emitter line 1/4 inch into PVC lateral.

12. Threaded Adaptor: For emitters requiring 3/8-inch or larger lines use solvent by solvent by threaded tees with threaded by swedge adaptors.

13. Backflow Prevention Assemblies: Pressure vacuum breakers shall be installed after the last control valve of each lawn irrigation circuit and shall be installed a minimum of 12 inches above the highest irrigation head on the circuit.

    Double check valve assemblies and reduced pressure principle backflow prevention assemblies shall be installed above grade with a minimum clearance of 12 inches. Both of these assemblies shall not be installed below grade unless the plans have been approved by the Manager. Locate all backflow prevention assemblies away from pavement and in shrubbery areas if possible.

    All risers to the breakers shall be galvanized heavy steel pipe and fittings, installed plumb. Fittings shall be male adaptors. Riser pipes shall be painted as specified elsewhere under painting with Mobil 42W9 or approved equal.

    All connections relative to backflow prevention assembly shall be made to comply with all local codes and ordinances.

14. Irrigation Controller: Unless otherwise directed by the Manager, irrigation control panel shall be 8 station, pedestal or wall mounted, in a weatherproof, tamperproof case with locks. Install cabinet plumb and true as detailed on the plans. Provide a long 2-inch conduit sweep elbow into the unit for the remote control wires. Allow for additional 3/4-inch conduit for the 110 volt supply wires. Paint any exposed portions of the conduits to match the controller.

    Gather all leads neatly and bind with tape and label as specified elsewhere in these Standards.

For new irrigation controller installed on existing wall:

a. Testing for the presence of hazardous materials in wall to be done by CIH.

b. Removal and disposal of all hazardous materials shall be done in accordance with Federal, State and Local laws.

c. For disturbed sections of existing wall, patch, repair, and repaint to match surrounding area.

15. Irrigation Remote Control Wire: Irrigation remote control wire with a spare wire shall be as shown on the plans (#14 minimum wire size) and shall be buried in conduits alongside of the irrigation lines and at the same depth or deeper. Where there are several lines in the same conduit, each shall be color-coded and shall be taped together at 10 feet on center. Under paved areas, walks and other structures, place conduit in oversize chases. Use expansion loops of 10 inches at the valve boxes and expose for servicing. Use waterproof, epoxy coated fittings, solder, tape, and shellac the connections.

16. Assembling Plastic Pipe

a. Due to the nature of plastic pipes and fittings, the Contractor is cautioned to exercise care in handling, loading, unloading and storing to avoid damage. The pipe and fittings shall be stored off the ground and under cover before using and shall be transported in a vehicle with a bed long enough to allow the length of pipe to lay flat. Defective pipe will not be accepted.

All plastic pipes shall be covered with a minimum of 3 inches of approved backfill material within 24 hours after being placed in the trench.

Center load pipe with sufficient backfill to prevent arching and whipping under pressure. Joints shall be left exposed for inspection by the Manager during the pressure test.

The Contractor shall arrange with the manufacturer of the pipe for the services of a qualified pipe instructor, who shall be on hand at the start of pipe assembly and during the installation as necessary to instruct in the proper assembly and installation of the pipe.

b. The joining and laying of PVC Schedules 40 AND 200-SDR 26 shall be as follows:

1. All plastic-to-plastic joints shall be welded with a solvent specifically designed for PVC pipes and fittings.

2. All plastic to metal joints shall be done with Schedule 80 threaded plastic male fittings that have been set with not over one turn with a wrench.

3. Long, unbroken runs of pipe shall be snaked in the trench to allow for expansion and contraction.

4. Joints shall be allowed to set for at least 24 hours before a constant pressure is applied.

c. Concrete thrust blocks shall be installed at base elbows of impact sprinkler heads as recommended by the manufacturer or as directed by the Manager.

d. Plastic pipes shall not be laid when there is water in the trench or when there is misting or rain at the site.

e. All exposed pipes such as risers and vacuum breakers shall be straight, clean and plumb and shall be painted with Mobil 42W9 or approved equal tinted to match color selected by the Manager. Pipes shall be gray, blue or black in color. No white pipe or fittings shall be used.

f. Drip irrigation emitter lines shall be laid parallel to the ground generally along contour lines with no apparent abrupt bends.

g. Sprinkler heads and risers shall be installed as follows:

1. The sprinkler layout as shown is diagrammatic and measurements are approximate, horizontal projections of the true lengths unless detailed. Contractor shall flag the sprinkler layout and obtain approval prior to final installation. Pipe sizing shall be as shown or larger.

2. All connections relative to backflow prevention shall be made to comply with local code and ordinances.

3. Spacing on small pop-ups and shrubbery sprays shall be in accordance with manufacturer's directions or closer.

4. Pop-up heads shall be placed 4 inches from any curb, walk, fence or building. Shrubbery sprays shall be placed 12 inches from any walk, drive, fence curb or building. Anti-siphon valves shall be placed 2 feet from any walk and 3 feet from any drive or parking space.

5. Pop-up heads shall be 1/4 inch above grade on plumb risers and shrubbery heads 6 inches above grade on plumb risers.

6. Risers from the tee to small pop-up heads shall be ½"x6" and to all shrubbery heads shall be ½"x16".

G. Testing shall be as follows:

1. After installation of the irrigation piping system and prior to completion of the trench backfilling and installation of the irrigators, the system shall be tested for leaks and flushed under pressure to remove any dirt, scale or other objectionable materials then tested for operational adequacy. All pressure tests are to be conducted in the presence of the Manager.

2. Solvent welded and threaded pipe fittings shall be pressure tested after installation in accordance with manufacturer's specifications.

3. All pipes, after installation, shall be tested to 100 psi before operating pressure with the pressure not dropping more than 5 psi in 30 minutes.

4. Coverage Test: When the entire irrigation system has been laid out in accordance with the plans and specifications, the Contractor in the presence of the Manager, shall perform a coverage test to determine if the water coverage for all areas is complete and adequate in accordance with the plans and specifications. The Contractor shall furnish all material and perform all work required to correct any inadequacies caused by installation or material defects, or any failure to follow the drawings and these specifications.

H. Cleaning Up. Upon completion of the construction, the Contractor shall remove all excess material, rubbish and other accumulated debris and shall restore the finished grade and topsoil to its original condition.

I. Inspection. After the entire system has been installed, the irrigation Contractor shall request a final inspection. All defects noted at that time shall be immediately corrected. All keys, instructions and spare parts shall be given to the Department at the time of final inspection. The Contractor shall prepare an "As Built" plan of the system as it was finally installed and forward said plans to the Manager.

J. Operation of Controller and System. Prior to the end of the planting maintenance period, the Contractor shall arrange a meeting on the site to instruct landscape maintenance personnel in the operation of the system and the control unit.

K. Guarantee. The entire irrigation system shall be guaranteed against defects in material and workmanship for a period of one year after the date of acceptance of the system in operation. Should any trouble develop within the time specified above, due to faulty workmanship, equipment or materials, the trouble shall be corrected to the entire satisfaction of the Department at no additional expense to the Department. When deficiencies become apparent, the Contractor shall be notified and repairs shall be made within one day thereafter or the Contractor shall pay for all damages caused by the delay.

L. Payment. Payment for IRRIGATION WORK will be made at the Lump Sum Bid, or will be included in the lump sum payment for landscaping, whichever is specified. In either case, payment shall represent full compensation for furnishing all materials, labor, tools, equipment and incidentals required to complete the irrigation and appurtenant work at the project site. Payment shall include required mains and laterals, sprinkler heads, electric and ball valves and boxes, rain sensor, trench, new irrigation connection to existing water main, flow meter, gate valve and box, backflow preventer, pressure regulating valve and box, new sprinkler controller, conduits, wiring, necessary fittings, cut and plug existing irrigation connection, removal of existing irrigation system and appurtenances, and all incidental work, in place complete, all in accordance with the plans and specifications.

DIVISION 400 - APPROVED MATERIAL LIST AND STANDARD DETAILS

DIVISION 400 - APPROVED MATERIAL LIST AND STANDARD DETAILS

SECTION 401 - GENERAL

This Division shall govern the construction of water system facilities under the jurisdiction of the Department of Water Supply of the various counties in the State of Hawaii.

Requirements peculiar to each department are reflected in these standards by tables and special notes. Also certain features of water system installations which do not readily lend themselves to standardization but are designed and installed according to the special requirements applying to each case shall be subject to special review and approval of the Manager.

Any feature of materials to be installed, or construction methods to be used for any installation within the scope of the Water System Standards, but not specifically described herein, shall be of good quality, according to accepted practice, and shall meet with the approval of the Manager.

Materials are specified as acceptable items by means of the manufacturer's catalog designations or reference numbers rather than by detailed specifications. Such references are frequently changed by the manufacturer. For any modifications to the material and the identification number, the manufacturer shall resubmit the material for review and approval by the Manager prior to incorporation to the water system standards and installation for water system improvements. For any changes to catalog designations, reference numbers and manufacturer’s name, a formal letter indicating such changes shall be submitted to the Manager. If any reference number is found to be obsolete, the Manager should be consulted for the latest designation.

If there are any modifications to the standard details as required by the project’s scope of work, such modifications shall be shown on the construction plans. Revised details shall be submitted for review and approval by the Manager prior to construction.

Section 402 - APPROVED MATERIAL LIST

TABLE OF CONTENTS
DIVISION 400, Section 402 - APPROVED MATERIAL LIST

SECTION PAGE

I. PIPES AND APPURTENANCES

A. Cast Iron Pipe (Ductile), Push-On Joints, Mechanical Joints, Flanged Joints 402-1
B. Cast Iron Fittings (Gray or Ductile) AWWA C110 402-1
C. AWWA C153 (compact) Fittings 402-1
D. PVC C-900 Pipe 402-2
E. PVC C-905 Pipe 150 psi 402-2
F. PVC Fittings AWWA C907 402-2
G. Gaskets 402-3
H. Sheet Packing (Gasket Material) 402-3
I. Couplings - Pipelines 402-4
J. Tapping Sleeves 402-4
K. Gland 402-5
L. Polywrap 402-6
M. Flanged Adapters 402-6
N. Plugs; Brass 402-7

II. VALVES AND APPURTENANCES

A. Air Relief Valves/Combination Air Valves (ARV) 402-8
1. Low Pressure (0-150 psi) 402-8
2. High Pressure (higher than 150 psi) 402-9
B. Gate Valves, 4” and Larger 402-11
1. 150-Pound Valves 402-11
2. 200-Pound Valves 402-12
3. 250-Pound Valves 402-13
4. Resilient Wedge (AWWA C509) 402-13
C. Butterfly Valves and Manual Operators 402-14
1. Butterfly Valves 402-14
2. Manual Operator 402-15
D. Service Valves, 3” and Smaller 402-15
1. Gate Valves 402-15
2. Ball Valves 402-16

SECTION PAGE

E. Check Valves 402-17
1. Vertical Check Valves 402-17
2. Swing Check Valves 402-17
a. (125-pound Steam) 402-17
b. (150-pound Steam) 402-17
c. (200-pound steam) 402-17
3. Horizontal Lift Check Valves (200-pound Steam) . . . 402-18
4. Inline Spring 402-18
5. Silent Check Valves 402-18
F. Hydraulic Control Valves 402-19
G. Valve Box, Castings 402-19
H. Manhole Castings 402-19

III. SERVICE LATERALS, FITTINGS AND APPURTENANCES

A. Ball Corps 402-20
B. Flux 402-20
C. Solder 402-21
D. Service Lateral Fittings 402-21
E. Ball Stops 402-22
F. Ball Meter Valves 402-23
G. Water Meter Union Couplings 402-23
H. Copper Pipe 402-24
I. Polyethylene Pipe 402-24
J. Service Saddles 402-24
K. Meter Boxes 402-26
L. Valve Boxes 402-26
M. Manhole Rungs (steps) - Copolymer Polypropylene . . . 402-26
N. Angle Valve 402-27

IV. FIRE HYDRANTS

A. Wet Barrel 402-28
B. Dry Barrel 402-28
C. Wharf Head 402-28
D. Fire Hydrant Connector 402-29

SECTION PAGE

V. PAINTS AND COATINGS

A. Paint Schedule for New Surfaces 402-30
1. Ferrous Metals: (Interior and Exterior) 402-30
2. Galvanized Metals (Interior and Exterior) 402-32
3. Factory Finished Metals (Interior and Exterior) 402-33
4. Aluminum Surfaces 402-35
5. Overflow Pipe 402-37
6. Masonry Surfaces (Exterior) 402-37
7. Masonry Surfaces (Interior) 402-39
8. Concrete Surfaces (Exterior) 402-40
9. Concrete Surfaces (Interior) 402-42
10. Wood (Exterior) 402-43
11. Wood, Other than Mahogany or Hardwood (Interior) 402-44
12. Mahogany & Hardwood (Interior Only) 402-45
13. Concrete Reservoirs (Interior) 402-46
14. Anti-Graffiti Coating System 402-47
B. Paint Schedule for Existing Surfaces 402-48
1. Ferrous Metal Items (Interior and Exterior - Rust Retained) 402-48
2. Existing Concrete, Masonry and Plaster (Exterior) 402-49
3. Existing Concrete, Masonry and Plaster (Reservoir Exterior) 402-51

VI. MISCELLANEOUS

A. All Thread Rod 402-52
B. Crystallization Products 402-52
C. Hi-Build TNEME-TAR 402-52
D. Pressure Gages and Appurtenances 402-52
1. Gages 402-52
2. Snubbers 402-53
3. Handle Cock 402-53
E. Tank Sliding Joint Material 402-53
1. Wall 402-53
2. Roof 402-53

DESCRIPTION		APPLICABLE TO			
Manufacturer	Catalog or Model No.	Kauai	Hawaii	Oahu	Maui
I. PIPES AND APPURTENANCES					
A. Cast Iron Pipe (Ductile), Push-On Joints, Mechanical Joints, Flanged Joints					
1. American Cast Iron Pipe Company, “Fastite”		0	0	0	0
2. Griffin (3-inch to 24-inch for Oahu)		0	0	0	0
3. Pacific States Cast Iron Company		0	0	0	0
4. United States Pipe and Foundry Company, "Tyton", 4” to 64”		0	0	0	0
B. Cast Iron Fittings (Gray or Ductile) AWWA C110					
1. American Cast Iron Pipe Company		0	0	0	0
2. Clow Corporation			0		0
3. Dayton Foundry Company, Ring Type		0		0	
4. Pacific States Cast Iron Company		0	0	0	0
5. Tyler Pipe		0	0	0	0
6. Union Foundry		0			0
7. United States Pipe and Foundry Company		0	0	0	0
C. AWWA C153 (compact) Fittings (For Maui: C110 Glands required)					
1. NAPPCO/SIGMA			0		0
2. Olympic					0
3. Tyler Pipe			0		0
4. United States Pipe and Foundry Company			0		0

DESCRIPTION		APPLICABLE TO			
Manufacturer	Catalog or Model No.	Kauai	Hawaii	Oahu	Maui
D. PVC C-900 Pipe					
1. Certain-Teed "Vinyl Iron" PVC Pipe		0		0	
2. JM Manufacturing	PVC Class water pipe with Ring-Tite Joint	0		0	
	MOA "Tuff Link" Pipe	0		0	
3. PW Pipe Twinseal C-900 PVC Class 150 Pipe		0		0	
4. Royal Pipe Systems PVC Pressure Pipe (6 and 8 inches, DR 14 and 4 to 12 inches, DR 18)				0	
5. Vinyl Tech CL 150 (4 to 12 inches)				0	
6. Western Plastics V-Lok Pipe, non-pressure lines				0	
E. PVC C-905 Pipe 150 psi					
1. IPEX “Big Brute” (16 to 24 inches, DR 18)				0	
2. JM Manufacturing Co., Inc., (16 to 24 inches, DR 18)				0	
3. PW Pipe (16 to 20 inches, DR 18)				0	
4. Royal Pipe Systems PVC Pressure Pipe (16 and 18 inches, DR 18)				0	
5. Vinyl Tech (16-inch only, DR 18)				0	
F. PVC Fittings AWWA C907					
1. Harco (4 to 8 inches) (8”x 8” Tee not approved for Oahu)				0	
2. IPEX “Blue Brute” (4 to 8 inches) (Must conform to AWWA C907)				0	

DESCRIPTION		APPLICABLE TO			
Manufacturer	Catalog or Model No.	Kauai	Hawaii	Oahu	Maui
G. Gaskets					
1. Anchor Company	421 Duck Inserted	0	0	0	0
2. Clow Corporation	Acopac CS 301, An "Equal" to asbestos in rising and nonrising stem valves			0	
3. Garlock	19	0	0	0	0
4. Romac	Flange Style	0		0	
5. Sacomo Manufacturing Co.	108	0	0	0	0
6. Stockham Valves and Fittings	Rogers non-asbestos D-7301 nonasbestos gasket material, as "an equal" to asbestos for Stackham cast iron valves			0	
	Garlock Blue-Gard Style 3000, as "an equal" to asbestos for Stockham cast iron valves.			0	
7. U.S. Pipe & Foundry Company	Flange-Tyte	0	0	0	0
H. Sheet Packing (Gasket Material)					
1. Clow Corporation	Gasket Acopac CS 301, an "equal" to asbestos in rising and nonrising stem valves			0	
2. John Crane Company	Style 997	0		0	0
3. Johns-Manville Sales Corporation	Packing – "Duro" packing, cut in separate rings, Style S-171	0	0	0	0
4. Mueller Co.	Klingersil C4401, Approved as "an equal" to asbestos for the gasket between the valve body and bonnet.			0	
5. Stockham Valves and Fittings	Garlock Blue-Gard Style 3000, as "an equal" to asbestos for Stockham cast iron valves			0	

DESCRIPTION		APPLICABLE TO			
Manufacturer	Catalog or Model No.	Kauai	Hawaii	Oahu	Maui
5. Stockham Valves and Fittings (Cont.)	Rogers Nobestos D-7301 nonasbestos gasket material, as "an equal" to asbestos for Stockham cast iron valves			0	
I. Couplings - Pipelines					
1. Baker	Series 228, 236, 240		0		0[1]
2. Cascade Manufacturing	433,441			0	
3. Dresser	Style 253	0	0		0[1]
4. JCM Standard Flex Coupling Adapter	No. 301			0	
5. Johns-Manville Sales Corporation	Tuff-Link FRP Couplings, for 16" Diameter class 150 Coupling Only			0	
6. Powerseal	3501,3502,3503,3504,3511,3512 3521MJ, 3541RT			0	
7. Romac	Style 501, Bolted Flex coupling-Cast Style	0	0	0	0[1]
	Ringwej Coupling	0		0	
8. Smith-Blair	Series 411,413,415,441		0		0[1]
	Series 433	0			0[1]
9. U.S. Pipe	Solid Sleeve U-514	0	0		0[1]
J. Tapping Sleeves					
1. American Flow Control	MJ Tapping Sleeve Series 1004		0		
	MJ Tapping Sleeve Series 2800-C		0		
	M.J. Split Tapping Sleeve			0	0
2. APAC Tapping Sleeve					0

1 - Long body style only

DESCRIPTION		APPLICABLE TO			
Manufacturer	Catalog or Model No.	Kauai	Hawaii	Oahu	Maui
3. Cascade Co.	Stainless Steel Split Tapping Sleeve Style 600			0	
4. Clow Corp.	MJ Tapping Sleeve, F-5093			0	0
	MJ Tapping Sleeve, F-5205			0	0
5. Ford Meter Box Co.	"FAST" All Stainless Steel	0			
6. JCM	432 Stainless Steel		0		
7. Kennedy	Squareseal Tapping Sleeve			0	
8. M&H Valve and Fitting Co.	Catalog 52, Fig. 74-75			0	
	Catalog 52, Style 974			0	0
9. Mueller Co.	Model H-615	0	0	0	0
	Model H-616		0	0	0
	Model H-619	0		0[2]	
	Model H-642	0			
	Model H-667	0		0	0
10. Powerseal Pipeline Products	3480 Stainless Steel		0	0	
	3490 All Stainless Steel			0	
11. Romac	"SST" Stainless Steel Tapping Sleeve	0	0	0	
12. Smith-Blair Full Circle Redi Clamp	663 Stainless Steel Tapping Sleeve	0			
13. U.S. Pipe	Smith Dual Compression Seal Tapping Sleeve			0	0
K. Gland					
1. EBAA Iron, Inc.	#9106 Series 600, 6-inch DI and accessories			0	
	Megalug Series 1100, MJ Restraint (4” through 48”)	0	0		0
2. Romac, ROMAGRIP Mechanical Joint Restraining Gland		0			

2 - For maximum working pressure of 150 psi

DESCRIPTION		APPLICABLE TO			
Manufacturer	Catalog or Model No.	Kauai	Hawaii	Oahu	Maui
3. Standard Water Works Equipment Co., Mechanical joint retainer glands and Kwik-Flanges				0	
4. Sigma Corporation	One-Lok MJ Restraint		0		
5. U.S. Pipe, Ductile Iron Segmented Mechanical Joint 24" through 48"				0	
6. U.S. pipe, Lightweight ductile Iron Mechanical Joint 8” through 12”, conforms to section 11-10 of the AWWA C111-90				0	
L. Polywrap					
1. Northtown Company Polyethylene Material		0		0	
2. Repcor, Inc. Polyethylene Material		0	0	0	0
M. Flanged Adapters					
1. Baker	Series 601	0	0	0	0
2. Dresser	Model 227	0	0	0	
3. EBAA Iron, Inc.	MEGAFLANGE Restraint				0
4. JCM Industries	Steel flange coupling adaptor No. 303, Cast/ductile iron composition is required.			0	
5. Mueller Co.	Viking-Johnson FLxFL Dismantling Joint, with 316 SS bolts, and NSF 61 approved coating for components	0		0	0
6. Powerseal Pipeline Products	Style 3521 MJ	0	0	0	
7. Romac Industries, Inc.	Style FCA 501	0	0	0	0

DESCRIPTION		APPLICABLE TO			
Manufacturer	Catalog or Model No.	Kauai	Hawaii	Oahu	Maui
8. Smith-Blair	Series 912, w/thicker gasket, 1" longer bolts & increased stainless steel band cutting width to accommodate thicker gasket	0	0	0	0
	Series 913, 914		0		
9. Uni-Flange	Adaptor Series 400		0		0
	Adaptor Series 420		0		
N. Plugs; Brass					
1. McDonald Co.	Sect. 3, Models 3206, 3208	0	0	0	0
2. Mueller Co.	Catalog W-103, Model H-10033	0	0	0	0

DESCRIPTION		APPLICABLE TO			
Manufacturer	Catalog or Model No.	Kauai	Hawaii	Oahu	Maui
II. VALVES AND APPURTENANCES					
A. Air Relief Valves/Combination Air Valves (ARV)					
1. Low Pressure (0-150 psi)					
a. APCO Willamette (Valve & Primer Corporation)	Catalog 726, Bulletin 600, Model 50 with 1" inlet and 3/32" orifice, working pressure 0-150 psi	0			
	Catalog 726, Bulletin 600, Model 65 with 3/4" inlet and 1/8" orifice, working pressure 0-150 psi			0	0
	Catalog 726, Bulletin 600, Model 200 with 2" inlet and 3/8" orifice, working pressure 0-150 psi			0	0
b. Armstrong Machine Works	1-AV with 3/4" inlet, working pressure 0-150 psi			0	
c. Fisher Automatic Air Vent Traps	Type 30, with 2" inlet and 3/8" orifice, working pressure 0-100 psi			0	0
d. GA Industries	Figure 912, with ¾” inlet and 1/8” orifice			0	
	Figure 922, with 2” inlet and 3/8” orifice			0	
e. Multiplex Manufacturing Company, Crispin Pressure Air Valves	P20 with 2" inlet and 3/8" orifice, working pressure 0-100 psi			0	0
	P20 with 2" inlet and 5/16" orifice, working pressure 0-150 psi			0	0
	Midget M-8 with ¾” inlet and 1/8” orifice, working pressure 0-150 psi			0	
	Midget M-10 with 1" inlet and 1/16" orifice, working pressure 0-150 psi	0			
f. Powerseal Pipeline Products	Style 5401, Model D with 1" inlet and 3/16" orifice, working pressure 0-150 psi	0			

DESCRIPTION		APPLICABLE TO			
Manufacturer	Catalog or Model No.	Kauai	Hawaii	Oahu	Maui
g. Val-Matic Valve & Manufacturing	Bulletin 15, 15A.3 with 1" inlet and 1/16" orifice, working pressure 0-150 psi	0			
	No. 25.5 with ¾" inlet, working pressure 0-150 psi, 1/8" orifice			0	
	No. 38.2 with 2" inlet, working pressure 0-150 psi, orifice ¼" for pipes 20" to 30", orifice 3/8" for pipes 36" and larger			0	
	No. 45 with 2"inlet, working pressure 0-150 psi, orifice ¼" for pipes 20" to 30", orifice 3/8" for pipes 36" and larger			0	
2. High Pressure (Higher than 150 psi)					
a. APCO Willamette (Valve & Primer Corporation)					
1. Air Release Valves	Catalog 726, Bulletin 600, Model 200 with 2" inlet and 7/32" orifice, working pressure 0-250 psi			0	0
	Catalog 726, Bulletin 600, Model 200-A with 1" inlet and 5/32" orifice, working pressure 0-250 psi		0	0	0
	Catalog 726, Bulletin 600, Model 205 with 2" inlet and 5/16" orifice, working pressure 0-250 psi			0	0
2. Air / Vacuum Valves	Catalog 726, Bulletin 601, Model 142 - 1" inlet, working pressure 0-300 psi				0
	Catalog 726, Bulletin 601, Model 144 - 2" inlet, working pressure 0-300 psi				0

DESCRIPTION		APPLICABLE TO			
Manufacturer	Catalog or Model No.	Kauai	Hawaii	Oahu	Maui
3. Combination Air Valves	Catalog 726, Bulletin 623, Model 143C "Heavy Duty" Combination Air Release Valves 1" inlet	0	0		0
	Catalog 726, Bulletin 623, Model 145C "Heavy Duty" Combination Air Release Valves 2" inlet		0		0
b. Armstrong Machine Works Air Relief Valves	2-AV with 3/4" inlet, working pressure 0-250 psi			0	
	6-AV with 2" inlet, working pressure 0-250 psi			0	
c. Fisher Automatic Air Vent Traps	Type 30, with 1" inlet and orifice size of No. 48 drill, working pressure 0-300 psi			0	0
d. GA Industries	Figure 912, with ¾” inlet and 3/32” orifice			0	
	Figure 922, with 2” inlet and 7/32” orifice			0	
e. Multiplex Mfg. Co. Crispin Universal Air Valve	UL10, working pressure 0-250 psi, Combination Valve	0	0		
	UL20, working pressure 0-250 psi		0		
	Midget M-8 with ¾” inlet and 3/32” orifice, working pressure 0-250 psi			0	
f. Powerseal Pipeline Products	Style 5403, Model A with 1" inlet and 5/64" orifice, working pressure 0-300 psi	0			
g. Val-Matic Valve & Manufacturing Corp.	Bulletin 200, Combination Air Valve 201C	0	0		
	Bulletin 200, Combination Air Valve 202C		0		
	No. 25.6 with 3/4" inlet, working pressure 0-300 psi, 7/64" orifice			0	
	No. 38.6 with 2" inlet, working pressure 0-300 psi, orifice 3/16" for pipes 20" to 30", orifice 5/16" for pipes 36" and larger			0	

DESCRIPTION		APPLICABLE TO			
Manufacturer	Catalog or Model No.	Kauai	Hawaii	Oahu	Maui
g. Val-Matic Valve & Manufacturing Corp. (cont.)	No. 45.5 with 2" inlet, working pressure 0-300 psi, orifice 3/16" for pipes 20" to 30", orifice 5/16" for pipes 36" and larger			0	
B. Gate Valves, 4" and Larger					
1. 150-Pound Valves:					
a. A.P. Smith (V-56-10M, metropolitan series 3000 in sizes 14” to 48” incl.)				0	
b. American Flow Control				0	0
c. Clow Corp.	Book 91, Model F-5062, Hub end			0	
	Book 91, Model F-5065, MJ			0	0
	Book 91, Model F-5070, FE			0	0
	Book 91, Model F-5080 in sizes 14" thru 48", Push on			0	
d. Kennedy Valve Mfg. Co.	Cat. 94A, Model 561, FE			0	0
	Cat. 94A, Model 566, OS & Y				0
	Cat. 94A, Model 571, MJ			0	0
	Cat. 94A, Model 572, MJ x FE			0	0
e. Mueller	Cat. E1, Model A-2380-6, FE			0	0
	Cat. E1, Model A-2380-16, MJ x FE			0	0
	Cat. E1, Model A-2380-20, MJ			0	0
	Cat. E1, Model A-2380-38			0	
	Cat. E1, Model A-2380-41			0	
	Cat. E1, Model A-2380-48			0	
	Cat. E1, Model A-2483-6 in sizes 14" to 48"			0	

DESCRIPTION		APPLICABLE TO			
Manufacturer	Catalog or Model No.	Kauai	Hawaii	Oahu	Maui
f. Stockham	Catalog 83, Model G-743-0			0	
	Catalog 83, Model G-745-0			0	
	Catalog 83, Model G-746-0			0	
	Catalog 83, Model G-747-0 in sizes 14" to 16"			0	
2. 200-Pound Valves:					
a. American	Type AWWA C-500				0
b. A.P. Smith	V-56-10M Metropolitan Series 3000 in sizes 4” to 12” incl.	0		0	
c. Clow Corp.	List 16 extra heavy pressure gate valve in sizes 24” to 30”	0		0	0
	Model F-5062	0		0	
	Model F-5065, MJ	0		0	0
	Model F-5066, MJ X FE	0		0	0
	Model F-5070, FE	0		0	0
	Model F-5072, FE-OS&Y	0		0	0
	Model F-5080 in sizes 4” thru 12”	0		0	
d. Kennedy Valve Mfg. Co.	Catalog No. 94A, Model 561, FE	0		0	0
	Catalog No. 94A, Model 566, FE, OS & Y				0
	Catalog No. 94A, Model 571, MJ	0		0	0
	Catalog No. 94A, Model 572MJ X FE	0		0	0

DESCRIPTION		APPLICABLE TO			
Manufacturer	Catalog or Model No.	Kauai	Hawaii	Oahu	Maui
e. Stockham	Catalog 83, Model G-743-0	0		0	
	Catalog 83, Model G-745-0	0		0	
	Catalog 83, Model G-746-0	0		0	
	Catalog 83, Model G-747-0 in sizes 4" to 12"	0		0	
3. 250-Pound Valves					
a. American Flow Control (4 to 12 inches)		0			0
b. Clow Corp.	16 Extra Heavy Pressure Gate Valve 4” to 20”	0		0	0
c. Kennedy Valve Mfg. Co.	Catalog 94A, Model 561, FE	0		0	0
	Catalog 94A, Model 566, FE, OS & Y				0
	Catalog 94A, Model 571, MJ	0		0	0
	Catalog 94A, Model 572X all extra heavy Class 250, MJ x FE	0		0	0
d. Mueller	Model A-2393-6, FE	0			0
	Model A-2393-20, MJ	0			0
	Model A-2484-6, FE, OS&Y	0			0
4. Resilient Wedge (AWWA C509)					
a. American AVK Co.	Series 25 Resilient Wedge	0	0		
b. American Flow Control	Series 500 Resilient Wedge, 200 psi	0	0		0
	Series 2500, 250 psi				0
c. Clow Corp.	Sizes 4" thru 12" Series 6100	0	0	0	0
	F-6114 (4”-12”)	0[3]			

3 - For use as a tapping valve only

DESCRIPTION		APPLICABLE TO			
Manufacturer	Catalog or Model No.	Kauai	Hawaii	Oahu	Maui
d. Kennedy Valve Mfg. Co.	4571, 4572, 4561, 4057, 4950	0			0
	Ken-Seal II Series 4000 (3”-12”)			0	
e. M&H	Series 4067; 01, 13, 02, 07				0
	4751-01				0
f. Mueller	Model A2360 Resilient Wedge	0	0	0	0
	T-2360-16 (4”-12”)	0[3]			
g. Stockham	Resilient Wedge			0	
h. US Pipe & Foundry Co.	Metroseal 250, 4" thru 20", 250 psi	0	0	0	0
	5860 (4”-12”)	0[3]			
C. Butterfly Valves and Manual Operators for underground service (All valves and operators shall be subject to Manager's approval)					
1. Butterfly Valves					
a. (BIF Industries) Dezurik				0	0
b. (Allis Chalmers) Stream Seal					0
c. Crane Co. (Stockham)	(Not full body / wafer)			0	
d. Kennedy Valve Company	Catalog BFV-77, Model ADAP-TORQ	0	0	0	0
	Model 30A & 50A shall be used w/approved 90-deg. operator			0	
e. M&H	Style 1450 (30”-48”)	0	0	0	0
	Style 4500 (4”-24”)	0	0	0	0
f. Mueller Company	Model B3211-6,FE		0	0	0
	"Lineseal III", 150 psi	0			0
	XP, 250 psi		0		0

3 - For use as a tapping valve only

DESCRIPTION		APPLICABLE TO			
Manufacturer	Catalog or Model No.	Kauai	Hawaii	Oahu	Maui
g. Henry Pratt Company	HP 250 Triton 10" and above		0		
	"Groundhog" (For Underground Service)	0	0		0
2. Manual Operator					
a. American Flow Control			0	0	0
b. Clow Corp.				0	0
c. Kenneth Elliot Company				0	
d. Kennedy Valve Company				0	0
e. M&H				0	0
f. Mueller Company	"Lineseal III"	0	0	0	0
g. Philadelphia Gear Corporation			0	0	0
D. Service Valves, 3" and Smaller					
1. Gate Valves					
a. American	Model 27-FE	0	0	0	0
	Model 27-M-MJ	0	0	0	0
	Model 28-HF	0		0	0
	Model 28-H-RT	0		0	0
b. Crane Co.	Model 438, Bronze	0	0	0	0
c. Fairbanks	Model 250	0		0	0
d. Hammond Valve Corp.	Model 645	0	0	0	0
	Models 606, 609, 665		0		
e. Kennedy	Catalog 86, Model 427	0	0	0	0
f. Kitz Valves	Model AKH27	0		0	

DESCRIPTION		APPLICABLE TO			
Manufacturer	Catalog or Model No.	Kauai	Hawaii	Oahu	Maui
g. Milwaukee Valve Co.	Models 105, 1104, 1105	0	0	0	
h. Nibco	Models T-113	0	0	0	0
i. Ohio Brass Co.	Model 2500	0	0	0	0
j. Ohio Injector Company	Model 7108	0	0	0	
k. Powell Co.	Catalog 11, Model 507	0		0	
l. Red & White		0		0	
m. (Stockham) Crane Co.	B-103 Non-asbestos, 1/4" thru 3"		0		
	Catalog 57, Model B-115	0	0	0	0
n. Walworth	Catalog 52, Model 4	0	0	0	0
2. Ball Valves					
a. Ford Co.	Model B11, ¾" to 2" (FIPT)		0		0
	Model B11(R), ¾" to 2"(FIPT)			0	
	HB-67 S, HB-34 S (Handles)				0
b. James Jones Co.	Model J-1900		0		0
	Model J-1905			0	
c. A.Y. McDonald Mfg. Co.	Model 6101 (6120 Handle)				0
d. Mueller	Model 300, B-20283				0
	99000 (Handle)				0
e. A.P. Smith	Hackensack Type 4				0

DESCRIPTION		APPLICABLE TO			
Manufacturer	Catalog or Model No.	Kauai	Hawaii	Oahu	Maui
E. Check Valves					
1. Vertical Check Valves					
a. Crane Co.	Model 29, Bronze	0	0	0	0
b. Kennedy Valve Manufacturing Co.	Catalog 86, Model 490	0	0	0	0
c. Ohio Brass Co.	Model 104	0	0	0	0
2. Swing Check Valves					
a. (125-pound Steam)					
1. Crane Co.	Model 37				0
2. Fairbanks	Model 0640 & 0642	0		0	0
3. Lunkenheimer	Catalog 66, Model 2144	0	0	0	0
4. A.Y. McDonald Mfg Co.	2050T	0	0	0	0
5. Milwaukee	Catalog C-161, Model 509	0	0	0	
6. Nibco	Models T-413-B	0	0	0	0
7. Ohio Brass Co.	Models 106 & 806	0	0	0	0
8. Stockham	Catalog 57, Model B-319	0	0	0	0
9. Walworth	Catalog 52, Model 406	0	0	0	0
b. (150-pound Steam)					
1. Keystone					0
c. (200-pound Steam)					
1. Crane	Model 36	0	0	0	0
2. Lunkenheimer	Catalog 66, Model 554	0	0	0	0
3. Milwaukee Valve Co.	Catalog 508		0		
4. Mueller	Catalog A-2600		0		0
5. Nibco	T-453-B	0	0	0	0

DESCRIPTION		APPLICABLE TO			
Manufacturer	Catalog or Model No.	Kauai	Hawaii	Oahu	Maui
6. Ohio Brass Co.	Model 806	0	0	0	0
7. Stockham	Catalog 57, Model B-345	0	0	0	0
8. Walworth	Catalog 52, Model 420	0	0	0	0
3. Horizontal Lift Check Valves (200-pound Steam)					
a. Fairbanks	Model 0608	0		0	0
b. Lunkenheimer	Catalog 66, Model 414	0	0	0	0
4. Inline Spring					
a. Ford Meter Box Co.	Single breast check valve, Model HS-11, 1-1/2” & 2"				0
	Straight cartridge style dual check valve, ¾” & 1”				0
5. Silent Check Valves					
a. APCO Willamette (Valve & Primer Corporation)	Catalog 726, Bulletin 640, APCO 300 & 600 series		0		0
b. Powerseal Pipeline Products	Pipe Economy Book, Models 636, 329				0
c. Val-Matic Valve & Mfg. Co.	Bulletin 1400 & 1800 series		0		

DESCRIPTION		APPLICABLE TO			
Manufacturer	Catalog or Model No.	Kauai	Hawaii	Oahu	Maui
F. Hydraulic Control Valves					
1. Ames Co.			0		
2. CLA-VAL Co.		0	0		0
3. Pratt	Ball valve for booster pump control		0		
G. Valve Box, Castings (For Oahu & Hawaii only: Valve box castings shall conform with Standard Details)					
1. D & L Foundry	Castings (Frames and Covers)				0
2. M&H	Model E-2702				0
3. Star	V8562A HD 6” slip valve box				0
4. Tyler	Model 6855				0
	Model 6895-1 (3-inch and Smaller Valves)	0			
	Model 6865 with No. 6 Round Base (4-inch and Larger Valves)	0			
H. Manhole Castings (For Oahu & Hawaii only: Manhole castings shall conform to Standard Details)					
1. Olympic	Model MH 19A/S				0
2. Star	MHHID28BWS8				0

DESCRIPTION		APPLICABLE TO			
Manufacturer	Catalog or Model No.	Kauai	Hawaii	Oahu	Maui
III. SERVICE LATERALS, FITTINGS AND APPURTENANCES					
A. Ball Corps					
1. Ford Meter Box Co., Inc.	FB 400	0			
	FB 800, 2 ½” x 2”	0		0	
	FB 1600, 1” to 2”				0
2. James Jones	J-1932				0
	J-1944 (Hawaii)			0	
3. A.Y. McDonald Mfg. Co.	3121, ¾” - 2”	0	0		
	3128B	0		0	
	3148B				0
4. Mueller Co.	B-2996			0	
	B-20045				0
5. Romac/Hays	Ball Corporation Stop	0			
B. Flux					
1. Englehard Co.	General Purpose Soldering Flux	0		0	
2. J W Harris Co.	Stay Clean Flux	0	0		0
3. Lake Chemical Co.	"La-co Flux"; Regular;	0	0	0	0
4. Mueller	“Streamline” No. 50	0	0	0	0
5. Oatey	Oatey Paste Flux and #95 Tinning Flux	0	0	0	
6. RectorSeal Corp.	Uniflux Soldering Paste	0		0	

DESCRIPTION		APPLICABLE TO			
Manufacturer	Catalog or Model No.	Kauai	Hawaii	Oahu	Maui
C. Solder					
1. American Smelting & Refining Co.	"ASARCO" Federated Wire Solder, Grade 50-50	0	0	0	0
2. Englehard Corp.	Silvabrite 100	0	0	0	0
3. J. W. Harris Co. Inc.	Stay-Safe 50 and Stay-Safe Bridgit	0	0		0
4. Mueller Co.	"Streamline" No. 50		0	0	0
5. Oatey Co.	Safe Flo	0	0	0	0
6. RSR Corp.	50/50 1/8-inch Wire		0		
7. Taracorp Industries Inc.	Taramet Sterling Lead Free	0		0	0
	Dutch Boy	0		0	0
D. Service Lateral Fittings					
1. American Brass Co.	"Anaconda"	0	0	0	0
2. Elkhart Products Corp.	Cast bronze threaded fittings, Cast copper alloy fittings for flared copper tube, bronze pipe flanges and flanged fittings		0	0	
3. Ford Meter Box Co.	Service Couplings				0
	Pack Joint Couplings	0			
4. Grabler			0		
5. James Jones	Bronze Service Fittings				0
6. Lee Brass Company		0	0	0	0
7. Lee Brothers Foundry Company		0	0	0	0
8. A.Y. McDonald Mfg. Co.	Bronze Service Fittings				0
	Mac-Pak 4753-22			0	
	Mac-Pak 4754-22			0	
	Mac-Pak 4758-22			0	
9. Merit Brass	Brass products		0		

DESCRIPTION		APPLICABLE TO			
Manufacturer	Catalog or Model No.	Kauai	Hawaii	Oahu	Maui
10. Mueller Co.	"Streamline"	0	0	0	0
	Bronze service Fittings				0
	Model H-15451 straight coupling		0		
11. Nibco Company		0	0	0	0
12. Phelps-Dodge Copper Products	"P-D"	0	0	0	0
E. Ball Stops					
1. Ford Meter Box Co. Inc.	Model B11 (female x female)	0	0		0
	Model B11(R)			0	
	Model B41		0		
	Model B44		0		
2. James Jones Co.	Catalog J, Model J-181 HS (Honolulu Special)	0			
	Catalog J, Model J-215		0		
	Catalog J, Model J-1900 Series		0		0
	Catalog J, Model J-1900W Series			0	0
	Model J-1944-LP			0	
3. A. Y. McDonald Mfg. Co.	6101, ¾” - 2”		0		0
	6111		0	0	
4. Mueller Co.	B20283-3 (w/ lock wings, for Oahu only), B25209R-3		0	0	
	B20283				0

DESCRIPTION		APPLICABLE TO			
Manufacturer	Catalog or Model No.	Kauai	Hawaii	Oahu	Maui
F. Ball Meter Valves					
1. Ford Meter Box Co., Inc.	Model B13	0	0	0	0
	Model B41	0	0	0	
	Model B43	0	0	0	
	Model B44	0	0	0	
	Model BF13	0	0	0	0
	Model BF43	0	0	0	
	B13-342W with HT-34 handle	0			
	B13-444W (1” Meter)	0			
	BF13-676W (1-1/2” Meter)	0			
	BF13-787W (2” Meter)	0			
2. James Jones Co.	Catalog J, Model 215			0	
	Model J-1908 (1” x ¾”)	0			
3. A.Y. McDonald Mfg. Co.	Model 6100 MW (2” meter)	0			
	Model 6100 MW-22 (3/4” – 2”)		0		
	Model 6101 M (1” x ¾”)	0			
	Model 6101 MW (1” x ¾”)	0			
G. Water Meter Union Couplings					
1. Ford Meter Box Co. Inc.	Model CF, CT		0		
	Lok Pak		0		0
2. Hays	5680 NM			0	
3. A.Y. McDonald Mfg. Co.	Model 4629			0	
	Model 4620 (3/4”-2”)		0		
4. Neptune Water Meter Union Couplings		0	0	0	

DESCRIPTION		APPLICABLE TO			
Manufacturer	Catalog or Model No.	Kauai	Hawaii	Oahu	Maui
H. Copper Pipe					
1. Cerro Copper Tubes	C-122 seamless, Type K, soft copper tubing	0	0	0	0
	Type K Soft temper copper tubing		0		
	Seamless Type K	0		0	
2. Kembla	Type K, seamless water tube			0	0
3. Mueller Brass Co.	Catalog S-361, "Streamline" Seamless Copper Tube, Type K	0	0	0	0
4. Noranda Metal	Type K, Soft copper tubing		0		
5. Reading Tube Corporation	Type K	0		0	0
6. Wolverine Tubing, Inc.	Type K, Soft copper, seamless, 1/4" through 2½"		0		
	Type K (for Oahu only, 1" – 2-1/2" only; must meet ASTM B-88 dimensional requirements)	0		0	
I. Polyethylene Pipe					
1. Dupont Polyethylene pipe copper tube size tubing, series 160, in 3/4-inch and 1-inch size only				0	
2. Phillips Driscopipe 5100 (Copper Tubing Size), polyethylene				0	
3. Nipak-Xtra High Density Polyethylene Water Service Pipe (Copper Tube Size SDR9)				0	
J. Service Saddles					
1. Cascade Co.	Style No. CS1	0[4]			
	Style No. CS22	0[4]			
2. Ford	202B with AWWA tap	0[4]	0		0

4 - Not applicable for use with PVC pipes

DESCRIPTION		APPLICABLE TO			
Manufacturer	Catalog or Model No.	Kauai	Hawaii	Oahu	Maui
3. James Jones	Catalog J, Model J975	0[4]			
	Catalog J, Model J979	0[4]		0	0
4. A.Y. McDonald Mfg. Co.	3825 Bronze Double Strap	0[4]	0	0[4,6]	0
	3801 Bronze Single Strap	0[5]			
	3805 Bronze Single Strap	0[5]			
	3815 Bronze Single Strap	0[4]			
5. Mueller	Catalog W-103, Sect. 6, Bronze Single and Double Strap with CC Type thread	0[4]	0		
	BR1B Bronze Single Strap	0[4]			
	BR2B Bronze Double Strap	0[4]			0
	H-13000 Series	0[5]			
6. Nappco Baker	Series 183-0 Bronze Double Strap	0[4]			0
	Bulletin 1K, Bronze Series 182-0, 183-0	0[4]	0		
7. Powerseal Pipeline Products	Model 3407	0[4]			
	Model 3408	0[4]			
8. Romac Industries	Series 202 B	0		0[5,6]	0
	Series 305, 306	0[5]			
9. Smith-Blair	321all bronze with Single Strap	0[4]	0		
	323 all bronze with Double Strap	0[4]	0		0

4 - Not applicable for use with PVC pipes
5 - For use with PVC pipes only
6 - For Oahu only: service saddle shall be bronze with double strap

DESCRIPTION		APPLICABLE TO			
Manufacturer	Catalog or Model No.	Kauai	Hawaii	Oahu	Maui
K. Meter Boxes (For Oahu & Hawaii only: Meter boxes shall conform with Standard Details)					
1. Precast Inc.	Type X Meter Box	0			
2. Armorcast Products Company	Type B Meter Box	0			
3. Ford Cast Iron					0
L. Valve Boxes (For Oahu & Hawaii only: Valve boxes shall conform with Standard Details)					
1. Non-Traffic Type					
a. Ametek	10-181-014/015				0
2. Traffic Type					
a. Olympic	M1020, 10”x8” frame & cover				0
b. Star	HVB BWS, 12” ring & cover				0
M. Manhole rungs (steps) - Copolymer Polypropylene					
1. Lane International	P-10938	0		0	
	P-14850	0		0	
	P-14938	0		0	
2. M.A. Industries		0		0	

DESCRIPTION		APPLICABLE TO			
Manufacturer	Catalog or Model No.	Kauai	Hawaii	Oahu	Maui
N. Angle Valve					
1. Ford	BA13-342W for Service Laterals	0			
	BA13-444W (1” Meter)	0			
	BFA13-666W (1-1/2" Meter)	0			
	BFA13-777W (2" Meter)	0			
	BA11-344W for Air Release Valve Assembly	0			
2. James Jones	J-1966W Angle Meter Valve (1" x 3/4")	0			
3. A.Y. McDonald Mfg. Co.	Model 4604 BF (1”)	0			
	Model 4604B (1" x 3/4")	0			
4. Mueller	B-24265 (1” x 3/4”)	0			

DESCRIPTION		APPLICABLE TO			
Manufacturer	Catalog or Model No.	Kauai	Hawaii	Oahu	Maui
IV. FIRE HYDRANTS					
A. Wet Barrel					
1. Clow Corp.	East Bay Model 5-B	0			0
	850 Series (Lightweight)	0		0	0
	Long Beach Model 425	0		0	0
	Long Beach Model 611 with chain	0			0
2. James Jones	Model 3740 (Bronze)			0	
	Model J4040H			0	
	Model J4040 (Lightweight)	0			0
B. Dry Barrel					
1. American Flow Control	Model B-62-B		0		
2. Kennedy	Catalog 94A, Model K-11		0		
3. M&H	Catalog 52, Traffic Model Compression Type		0		
4. Mueller	Modern Centurion		0		
	Super Centurion 250 Model A-423		0		
	Centurion		0		
C. Wharf Head					
1. James Jones	Model J-344	0			

DESCRIPTION		APPLICABLE TO			
Manufacturer	Catalog or Model No.	Kauai	Hawaii	Oahu	Maui
D. Fire Hydrant Connector					
1. Gradelok	6” x 12”		0		

DESCRIPTION		APPLICABLE TO			
Manufacturer	Catalog or Model No.	Kauai	Hawaii	Oahu	Maui
V. PAINTS AND COATINGS					
A. Paint Schedule for New Surfaces					
1. Ferrous Metals: (Interior and Exterior)					
a. Benjamin Moore	Prime: Benjamin Moore M45/M46 Epoxy Mastic Coating (4.0-7.0 mils DFT)		0		
	Finish: Benjamin Moore M74/M75 Aliphatic Urethane Gloss (2.5-4.0 mils DFT)		0		
b. Dupont System	Prime: Dupont 25P Epoxy Mastic (3-5 mils DFT)	0	0	0	0
	Finish: Dupont Imron 333 Polyurethane Enamel (2 mils DFT)	0	0	0	0
c. ICI-Devoe System	Prime: ICI-Devoe Bar-Rust 235 Multi-Purpose Epoxy Coating, 5.9-11.7 mils WFT, (4-8 mils DFT)	0	0	0	0
	Finish: ICI-Devoe Devthane 359 Aliphatic Urethane Gloss Enamel, 6.7-10 mils WFT, (4-6 mils DFT)	0	0	0	0
Or	Finish: ICI Devoes Coatings Devthane 379 Gloss Aliphatic Urethane @ 335-500 sf/gal (3.2-4.8 wet; 2.0-3.0 mils DFT		0		
d. Rust-Oleum System	Prime: A-08-4501 Vinyl Wash Prime Mix pre-measured gallon with plastic quart of A-97-4502 Activator. Spray one (1) coat at 0.5 mils. May be recoated after five (5) minutes.	0	0	0	0
	Intermediate: Rust-Oleum 9369 or 9381 Epoxy Primer (2 mils DFT)	0	0	0	0
	Finish: Rust-Oleum 9400 system Rust-O-Thane (Polyurethane-2 mils DFT)	0	0	0	0

DESCRIPTION		APPLICABLE TO			
Manufacturer	Catalog or Model No.	Kauai	Hawaii	Oahu	Maui
e. Sinclair System	Prime: Sinclair's PA 72 Corrosion Resistant Epoxy Metal Primer (2 mils DFT)	0	0	0	0
	Finish: Sinclair UR2 Sinthane Gloss Enamel (2 mils DFT)	0	0	0	0
f. Valspar/Mobil System	Prime: Valspar/Mobil Val-Chem HI Build Epoxy, 89 Series (4 mils DFT)	0	0	0	0
	Finish: Valspar/Mobil Mobilthane Enamel, 40 series, 3 parts Base component to 1 part 40-T-2 Curing Agent, (2 mils DFT) Aliphatic Urethane	0	0	0	0
g. Wasser High Tech Coatings	Prime: MC-Zinc, zinc-rich, single component, moisture-cure polyurethane, (3 mils DFT)			0	
	Intermediate: MC-Ferrox B, micaceous iron oxide-filled, single component, moisture-cure polyurethane (3 mils DFT), or MC-CR, single component, moisture-cure polyurethane, if topcoat is light color, (3 mils DFT)			0	
	Topcoat: MC-Luster single component, moisture-cure, aliphatic polyurethane (3 mils DFT)			0	
h. Carboline	Super Hi Gard				0

DESCRIPTION		APPLICABLE TO			
Manufacturer	Catalog or Model No.	Kauai	Hawaii	Oahu	Maui
2. Galvanized Metals (Interior and Exterior)					
a. Benjamin Moore	Pretreatment: Benjamin Moore M83 Oil and Grease Emulsifier		0		
	Prime: Benjamin Moore M45/M46 Epoxy Mastic Coating (4.0-7.0 mils DFT)		0		
	Finish: Benjamin Moore M74/M75 Aliphatic Urethane Gloss (2.5-4.0 mils DFT)		0		
b. Dupont System	Prime: Dupont 25P Epoxy Mastic (3-5 mils DFT)	0	0	0	0
	Finish: Dupont Imron 333 Polyurethane Enamel (2 mils DFT)	0	0	0	0
c. ICI-Devoe	Surface Preparation: ICI-Devoe Devprep 88 Heavy duty Cleaner	0	0	0	0
	Prime: ICI-Devoe Bar-Rust 235 Multi-Purpose Epoxy Coating, 5.9-11.7 mils WFT, (4-8 mils DFT)	0	0	0	0
	Finish: ICI-Devoe Devthane 359 aliphatic Urethane gloss Enamel, 6.7-10 mils WFT, (4-6 mils DFT)	0	0	0	0
Or	Finish: ICI Devoe Coatings Devthane 379 Gloss Aliphatic Urethane @ 335-500 sf/gal (3.2-4.8 wet; 2.0-3.0 mils DFT)		0		
d. Rust-Oleum System	Surface Preparation: Rust-Oleum A-08-4501 Viny Wash Prime Mix pre-measured gallon with plastic quart of A-97-4502 Activator	0	0	0	0
	Prime: Rust-Oleum 9369 or 9381 Epoxy Primer (2 mils DFT)	0	0	0	0
	Finish: Rust-Oleum 9400 system Rust-O-Thane (Polyurethane 2 mils DFT)	0	0	0	0

DESCRIPTION		APPLICABLE TO			
Manufacturer	Catalog or Model No.	Kauai	Hawaii	Oahu	Maui
e. Sinclair System	Pretreatment: 7113 Vinyl Wash Primer	0	0	0	0
	Prime: Sinclair's PA 72 Corrosion Resistant Epoxy Metal Primer (2 mils DFT)	0	0	0	0
	Finish: Sinclair UR2 Sinthane Gloss Enamel (2 mils DFT)	0	0	0	0
f. Valspar/Mobil System	Prime: Valspar/Mobil Val Chem Vinly Wash Primer, 13-Y-8, (0.5 mil DFT)	0	0	0	0
	Intermediate: Valspar/Mobil Bal-Chem HI Build Epoxy, 89 Series (4 mils DFT)	0	0	0	0
	Finish: Valspar/Mobil Mobilthane Enamel, 40 Series, 3 parts Base Component to 1 part 40-T-2 Curing Agent, (2 mils DFT) Aliphatic Urethane	0	0	0	0
g. Wasser High Tech Coatings	Surface Prep: Acid Etch Using 7-10% Hydrochloric Acid Solution			0	
	Primer/Topcoat: MC-Luster, Single Component, Moisture-cure, Aliphatic Polyurethane (3 mils DFT)			0	
3. Factory Finished Metals: (Interior and Exterior)					
a. Benjamin Moore	Pretreatment: Benjamin Moore M83 Oil and Grease Emulsifier		0		
	Prime: Benjamin Moore M35 Epoxy Penetrating Bonding Sealer (2.0-4.0 mils DFT)		0		
	Finish: Benjamin Moore M74/M75 Aliphatic Urethane Gloss (2.5-4.0 mils DFT)		0		

DESCRIPTION		APPLICABLE TO			
Manufacturer	Catalog or Model No.	Kauai	Hawaii	Oahu	Maui
b. Dupont System	Intermediate: Dupont 25P Epoxy Mastic (3-5 mils DFT)	0	0	0	0
	Finish: Dupont Imron 333 Polyurethane Enamel (2 mils DFT)	0	0	0	0
c. ICI-Devoe System	Pre-treatment: ICI Devoe Coatings Devprep 88 Heavy Duty Cleaner (Rinse thoroughly, until all foaming stops		0		
	Prime: ICI-Devoe Bar-Rust 235 Multi-Purpose Epoxy Coating, 5.9-11.7 mils WFT, (4-6 mils DFT)	0	0	0	0
	Finish: ICI-Devoe Devthane 359 Aliphatic urethane gloss enamel, 6.7-10 mils WFT, (4-6 mils DFT)	0	0	0	0
Or	Finish: ICI Devoe Coatings Devthane 379 Gloss Aliphatic Urethane @ 335-500 sf/gal (3.2-4.8 wet; 2.0-3.0 mils DFT)		0		
d. Rust-Oleum System	Intermediate: Rust-Oleum 9369 or 9381 Epoxy Primer (2 mils DFT)	0	0	0	0
	Finish: Rust-Oleum 9400 system Rust-O-Thane (Polyurethane 2 mils DFT)	0	0	0	0
e. Sinclair System	Prime: Sinclair's PA 72 Corrosion Resistant Epoxy Metal Primer (2 mils DFT)	0	0	0	0
	Finish: Sinclair UR2 Sinthane Gloss Enamel (2 mils DFT)	0	0	0	0
f. Valspar/Mobil System	Intermediate: Valspar/Mobil Val Cham HI Build Epoxy, 89 Series (4 mils DFT)	0	0	0	0
	Finish: Valspar/Mobil Mobilthane Enamel, 40 Series, 3 parts Base Componenet to 1 part 40-T-2 Curing Agent (2 mils DFT) Aliphatic Urethane	0	0	0	0

DESCRIPTION		APPLICABLE TO			
Manufacturer	Catalog or Model No.	Kauai	Hawaii	Oahu	Maui
g. Wasser High Tech Coatings	Intermediate: MC-Miomastic, Micaceous Iron Oxide Filled Single Component, Moisture-Cure Polyurethane, (3 mils DFT), or MC-CR, Single Component, Moisture-Cure Polyurethane, if Topcoat is Light Color (3 mils DFT)			0	
	Topcoat: MC-Luster, Single Component, Moisture-Cure, Aliphatic Polyurethane (3 mils DFT)			0	
h. Carboline	Super Hi Gard				0
4. Aluminum Surfaces					
a. Benjamin Moore	Pretreatment: Benjamin Moore M83 Oil and Grease Emulsifier		0		
	Prime: Benjamin Moore M35 Epoxy Penetrating Bonding Sealer (2.0-4.0 mils DFT)		0		
	Finish: Benjamin Moore M74/M75 Aliphatic Urethane Gloss (2.5-4.0 mils DFT)		0		
b. Dupont System	Surface Preparation: Wipe with Dupont T-8054	0	0	0	0
	Prime: Dupont 25P Epoxy Mastic (3-5 mils DFT)	0	0	0	0
	Finish: Dupont Imron 333 Polyurethane Enamel (2 mils DFT)	0	0	0	0

DESCRIPTION		APPLICABLE TO			
Manufacturer	Catalog or Model No.	Kauai	Hawaii	Oahu	Maui
c. ICI-Devoe System	Surface Preparation ICI-Devoe Devprep 88 Heavy Duty Cleaner	0	0	0	0
	Prime: ICI-Devoe Bar-Rust 235 Multi-Purpose Epoxy Coating, 5.9-11.7 mils WFT, (4-8 mils DFT)	0	0	0	0
	Finish: ICI-Devoe Devthane 359 Aliphatic Urethane Gloss Enamel, 6.7-10 mils WFT, (406 mils DFT)	0	0	0	0
	Prime: ICI Devoe Coatings Devran 205 Universal Epoxy Primer @ 230-465 sf/gal (4.0-7.0 mils wet; 2.0-4.0 mils DFT)		0		
	Finish: ICI Devoe Coatings Devthane 379 Gloss Aliphatic Urethane @ 335-500 sf/gal (3.2-4.8 wet; 2.0-3.0 mils DFT)		0		
d. Rust-Oleum System	Surface Preparation: Rust-Oleum A-97-4501 Vinyl	0	0		0
	Prime: Rust-Oleum 9369 or 9381 Epoxy Primer (2 mils DFT)	0	0	0	0
	Finish: Rust-Oleum 9400 system Rust-O-Thane (Polyurethane 2 mils DFT)	0	0	0	0
e. Sinclair System	Surface Prep: Surfaces must be clean, dry and free of foreign substances which may impair adhesion. Sand surface to roughen to provide a mechanical tooth.	0	0	0	0
	Prime: Sinclair's PA 72 Corrosion Resistant Epoxy Metal Primer (2 mils DFT)	0	0	0	0
	Finish: Sinclair UR2 Sinthane Gloss Enamel (2 mils DFT)	0	0	0	0

DESCRIPTION		APPLICABLE TO			
Manufacturer	Catalog or Model No.	Kauai	Hawaii	Oahu	Maui
f. Valspar/Mobil System	Surface Preparation: Wipe with solvent	0	0	0	0
	Prime: Valspar/Mobil Val-Chem HI Build Epoxy, 89 Series (4 mils DFT)	0	0	0	0
	Finish: Valspar/Mobil Mobilthane Enamel, 40 Series, 3 parts Base Component to 1 part 40-T-2 Curing Agent. (2 mils DFT) Aliphatic Urethane.	0	0	0	0
g. Wasser High Tech Coatings	Surface Prep: Scarify to produce a Profile			0	
	Prime: MC-CR, Single Component, Moisture-Cure, polyurethane, (3 mils DFT)			0	
	Topcoat: MC-Luster, Single Component, Moisture-Cure, Aliphatic Polyurethane (3 mils DFT)			0	
5. Overflow Pipe					
a. Inertol No. 49		0	0	0	
6. Masonry Surfaces (Exterior)					
a. Ameritone System	Prime: Ameritone PA010 APF Latex Block Filler	0	0	0	0
	Finish: Ameritone W200 Exterior Vinyl Bond Acrylic Paint	0	0	0	0

DESCRIPTION		APPLICABLE TO			
Manufacturer	Catalog or Model No.	Kauai	Hawaii	Oahu	Maui
b. Benjamin Moore	Prime: Benjamin Moore M88 Latex Block Filler (8.0-10.0 mils DFT or 60-75 sq. ft. per gallon		0		
	Finish: Two Coats; Benjamin Moore 170 SuperSpec House and Trim Paint - Semi-gloss Finish (1.1-2.0 mils DFT)		0		
c. Chemprobe System	2 coats Chemprobe Corporation Prime-A-Pell 200 Masonry waterproofing (500 sq. ft./gal./coat)	0	0	0	0
d. ICI-Devoe System	Prime: ICI Devoe Coatings 4000 Bloxfil Interior/Exterior Heavy Duty Acrylic Block Filler @ 50-75 sf/gal (15.5-32.0 wet; 7.0-14.5 mils DFT)	0	0	0	0
	Finish: (2 coats) 2406 Dulux Professional Exterior 100% Acrylic Semi-Gloss Finish @ 300-400 sf/gal (4.1-5.4 wet; 1.5-2.0 mils DFT per coat)	0	0	0	0
	Prime: ICI–Devoe Bloxfil 4000 Interior/Exterior Heavy Duty Acrylic Block Filler; 15.5-32.0 mils wet film thickness (7.0-14.5 mils DFT)	0	0	0	
	Finish: (2 coats) ICI Paint 2200-XXXX Decrashield Exterior 100% Acrylic Flat Finish Paint; 1.6-2.1 mils DFT	0	0	0	
e. Rust-Oleum System	Prime: Rust-Oleum 5199 Block Filler (Fill Pores)	0	0	0	0
	Finish: Rust-Oleum 5700 system Water Reducible Acrylic (2 mils DFT)	0	0	0	0
f. Sinclair System	Prime: (One Coat) Sinclair 1010 Vinyl Block Coater (50 sq. ft./gal.)	0	0	0	0
	Finish: (One Coat) Sinclair 4400 Aqua Life Enamel (@ a maximum rate of 350 sq. ft./gal.)	0	0	0	0

DESCRIPTION		APPLICABLE TO			
Manufacturer	Catalog or Model No.	Kauai	Hawaii	Oahu	Maui
g. Valspar/Mobil System	Prime: Valspar/Mobil Latex Block Filler, 79-W-8, 50 sq. ft./gal.	0	0	0	0
	Finish: Valspar/Mobil Water Acrylic Enamel, 42 Series (2 mils DFT)	0	0	0	0
h. Wasser High Tech Coatings	Prime: MC-CR, Single Component, Moisture-Cure, Polyurethane Thinned 20% with Wasser MC Thinner to Penetrate Seal, (3 mils DFT)			0	
	Finish: MC Luster, Single Component, Moisture-Cure, Aliphatic Polyurethane, (3 mils DFT)			0	
i. Carboline	Acrylic				0
7. Masonry Surfaces (Interior)					
a. Benjamin Moore	Prime: Benjamin Moore M88 Latex Block Filler (8.0-10.0 mils DFT or 60-75 sq. ft. per gallon		0		
	Finish: Two Coats; Benjamin Moore 170 SuperSpec House and Trim Paint - Semi-gloss Finish (1.1-2.0 mils DFT)		0		
b. ICI-Devoe System	Prime: ICI-Devoe Bloxfil 4000 Int./Ext. Heavy Duty Acrylic Block Filler, 15.5-32 mils WFT, (7-14.5 mils DFT)	0	0	0	0
	Finish: Two Coats, ICI-Devoe Tru-Glaze WB 4408-XXXX/4408-9999 Waterborne Epoxy Gloss coating, 5-11 mils WFT, (2-5 mils DFT)	0	0	0	0

DESCRIPTION		APPLICABLE TO			
Manufacturer	Catalog or Model No.	Kauai	Hawaii	Oahu	Maui
c. Rust-Oleum System	Prime: Rust-Oleum 5199 Block Filler (Fill Pores)	0	0	0	0
	Finish: Rust-Oleum 9300 system H.D. Epoxy (2 mils DFT)	0	0	0	0
d. Sinclair System	Prime: (One Coat) Sinclair 1010 Vinyl Block Coater (50 sq. ft./gal.)	0	0	0	0
	Finish: (Two Coats) Sinclair AF15-11 Epogloss Epoxy Enamel (2.5-3.5 mils DFT)	0	0	0	0
e. Valspar/Mobil System	Prime: Valspar/Mobil Val-Chem HI Build Epoxy, 89 Series (4 mils DFT)	0	0	0	0
	Finish: Valspar/Mobil Mobilthane Enamel, 40 Series, 3 parts Base Component to 1 part 40-T-2 Curing Agent, (2 mils DFT) Aliphatic Urethane	0	0	0	0
f. Carboline					0
8. Concrete Surfaces (Exterior)					
a. Ameritone System	Prime: Ameritone E8051 Elastomeric Epoxy Ester Primer	0	0	0	0
	Finish: Ameritone W200 Exterior Vinyl Bond Acrylic Paint	0	0	0	0
b. Benjamin Moore	Prime: Benjamin Moore M88 Latex Block Filler (8.0-10.0 mils DFT or 60-75 sq. ft. per gallon		0		
	Finish: Two Coats; Benjamin Moore 170 SuperSpec House and Trim Paint - Semi-gloss Finish (1.1-2.0 mils DFT)		0		
c. Chemprobe System	1 coat Chemprobe Corporation Prime-A-Pell 200 Masonry waterproofing (500 sq. ft./gal.)	0	0	0	0

DESCRIPTION		APPLICABLE TO			
Manufacturer	Catalog or Model No.	Kauai	Hawaii	Oahu	Maui
d. ICI-Devoe System	Prime: ICI Devoe Coatings 4030 Tru-Glaze-WB Waterborne Epoxy Primer @ 200-270 sf/gal (4.0-8.0 mils wet; 2.0-4.0 mils DFT)		0	0	0
	Finish: (2 coats) 2406 Dulux Professional Exterior 100% Acrylic Semi-Gloss Finish @ 300-400 sf/gal (4.1-5.4 wet; 1.5-2.0 mils DFT per coat)		0	0	
Or	Finish: (2coats) ICI Devoe Coatings 4408 Tru-Glaze-WB Waterborne Epoxy Gloss Coatings @ 235-320 sf/gal (5.0-11.0 wet; 2.0-5.0 mils DFT per coat)				0
e. Sinclair System	Prime: (One Coat) Sinclair 18 Epoprime (@ a maximum rate of 250 sq. ft./gal.)	0	0	0	0
	Finish: (One Coat) Sinclair 4400 Aqua Life Enamel (@ a maximum rate of 350 sq. ft/gal)	0	0	0	0
Or	Finish: (One Coat) Sinclair 130 Stuc-O-Life (@ a maximum rate of 300 sq. ft./gal.)	0	0	0	
f. Valspar/Mobil System	Prime: Valspar/Mobil Latex Block Filler, 79-W-8, 50 sq. ft./gal.	0	0	0	0
	Finish: Valspar/Mobil, Water Acrylic Enamel, 42 Series (2 mils DFT)	0	0	0	0
g. Wasser High Tech Coatings	Prime: MC-CR, Single Component, Moisture-Cure, Polyurethane Thinned 20% with Wasser MC Thinner to Penetrate Seal, (3 mils DFT)			0	
	Finish: MC-Luster, Single component, Moisture-Cure, Aliphatic Polyurethane, (3 mils DFT)			0	
h. Carboline	Acrylic				0

DESCRIPTION		APPLICABLE TO			
Manufacturer	Catalog or Model No.	Kauai	Hawaii	Oahu	Maui
9. Concrete Surfaces (Interior)					
a. Benjamin Moore	Prime: Benjamin Moore M88 Latex Block Filler (8.0-10.0 mils DFT or 60-75 sq. ft. per gallon		0		
	Finish: Two Coats; Benjamin Moore 170 SuperSpec House and Trim Paint – Semi-gloss Finish (1.1-2.0 mils DFT)		0		
Or	Finish: Benjamin Moore M43/M44 Acrylic Epoxy Gloss Coating (1.5-3.0 mils DFT)		0		
b. ICI-Devoe System	Prime: ICI Devoe Coatings 4030 Tru-Glaze-WB Waterborne Epoxy Primer @ 200-270 sf/gal (4.0-8.0 mils wet; 2.0-4.0 mils DFT)		0		0
	Finish: (2coats) ICI Devoe Coatings 4408 Tru-Glaze-WB Waterborne Epoxy Gloss Coatings @ 235-320 sf/gal (5.0-11.0 wet; 2.0-5.0 mils DFT per coat)		0		0
	Prime: ICI-Devoe Devran 201 Universal Epoxy Primer; 4.0-6.0 mils wet film thickness (2.0-3.0 mils DFT)			0	0
	Finish: (2coats) ICI-Devoe Tru-Glaze WB 4408-XXXX/4408-999 Waterborne Epoxy Gloss Coatings; 5.0-11.0 mils wet film thickness (2.0-5.0 mils DFT)			0	0
c. Carboline	Acrylic				0

DESCRIPTION		APPLICABLE TO			
Manufacturer	Catalog or Model No.	Kauai	Hawaii	Oahu	Maui
10. Wood (Exterior)					
a. Benjamin Moore	Prime: Benjamin Moore 024 Fresh Start All-Purpose Alkyd Primer (1.5-2.5 mils DFT)		0		
	Finish: Two Coats; Benjamin Moore 110 Moore's House Paint Gloss (1.5-2.5 mils DFT)		0		
b. ICI-Devoe System	Prime: ICI Paint 2110-1200 Ultra-Hide Durus Exterior Alkyd primer, 3-4 mils WFT, (2-3 mils DFT)	0	0	0	0
	Finish: One or Two Coats, ICI Paint 2518-XXXX Ultra-Hide Durus Exterior Gloss Paint, 3-4 mils WFT, (2-3 mils DFT)	0	0	0	0
Or	Finish: (2coats) ICI Devoe Coatings 4208 Devflex Interior/Exterior Waterborne Acrylic Gloss Enamel @ 330-430 sf/gal (3.5-5.0 wet; 1.5-2.0 mils DFT per coat)		0		
c. Dutch Boy System	Prime: Dutch Boy 200-16 Exterior Wood Prime (400 SF per gal.)	0		0	0
	Finish: Dutch Boy 201-10 Exterior House & Trim Enamel (400 SF per gal.)	0		0	0
d. Sinclair System	Prime: (One Coat) Sinclair 289 Exterior Wood Primer (300 sq. ft./gal.)	0	0	0	0
	Finish: (One Coat) Sinclair GE2 Sash & Trim Enamel (400 sq. ft./gal.)	0	0	0	0
Or	Finish: Sinclair 7500 Sintec Industrial Enamel (400 sq. ft./gal.)	0	0	0	0

DESCRIPTION		APPLICABLE TO			
Manufacturer	Catalog or Model No.	Kauai	Hawaii	Oahu	Maui
e. Valspar/Mobil System	Prime: Valspar/Mobil Exterior First Coater, 17-W-4, (3 mils DFT)	0	0	0	0
	Finish: Valspar/Mobil Panorama Coatings, 12 Series, (2 mils DFT)	0	0	0	0
11. Wood, Other than Mahogany or Hardwood (Interior)					
a. Benjamin Moore	Prime: Benjamin Moore 024 Fresh Start All-Purpose Alkyd Primer (1.5-2.5 mils DFT)		0		
	Finish: Two Coats; Benjamin Moore 235 Satin Impervo Enamel (1.0-1.5 mils DFT)		0		
b. ICI-Devoe Paint System	Prime: ICI Paint 1110-1200 Ultra Hide Stain Jammer Primer/Sealer, (1-2 mils DFT)	0	0	0	0
	Finish: Two Coats, ICI Paint 1516-XXXX Alkyd Semi-Gloss Interior Wall and Trim Enamel, 3 mils WFT, (1-2 mils DFT)	0	0	0	0
	Prime: 1120 Ultra-hide Oil/Alkyd Interior Wood Undercoater @ 400-450 sf/gal (3.0-3.5 wet; 2.0-2.5 mils DFT)		0		0
	Finish: (2 coats) ICI Devoe Coatings 4208 Devflex Interior/ Exterior Waterborne Acrylic Gloss Enamel @ 330-430 sf/gal (3.5-5.0 wet; 1.5-2.0 mils DFT per coat)		0		0
c. Dutch Boy System	Prime: Dutch Boy 200-17 Interior Alkyd Wall & Wood Primer (400 SF per gal.)	0		0	0
	Finish: Dutch Boy 211-XX Series Alkyd Semi-Gloss Finish (450 SF per gal.)	0		0	0

DESCRIPTION		APPLICABLE TO			
Manufacturer	Catalog or Model No.	Kauai	Hawaii	Oahu	Maui
d. Sinclair System	Prime: (One Coat) Sinclair 985 Sintec Undercoater (350 sq. ft./gal.)	0	0	0	0
	Finish: (One Coat) Sinclair 7800 Sintec Semi-Gloss (450 sq. ft./gal.)	0	0	0	0
e. Valspar/Mobil System	Prime: Valspar/Mobil Sovalex Enamel Undercoater, 47-W-5, (1.5 mils DFT)	0	0	0	0
	Finish: Valspar/Mobil M & F Enamel, 20 Series, (2 mils DFT)	0	0	0	0
12. Mahogany & Hardwood (Interior Only)					
a. Benjamin Moore	Prime: Benjamin Moore 413 Benwood Sanding Sealer Primer (1.0 mils DFT)		0		
	Finish: Two Coats; Benjamin Moore 419 Benwood Fast Dry Clear Varnish Gloss (1.0-1.5 mils DFT)		0		
b. Devoe System	Filler: Devoe 4800 Wonder Woodstain Paste Wood Filler	0	0	0	0
	Sealer: Devoe 4900 Wonder Woodsealer Quick Dry Wood Sealer	0	0	0	0
	Finish: Devoe 87 Spar #5500 Mirrothane Polyurethane Varnish Gloss	0	0	0	0
	Stain: 1700 Woodpride Interior Oil Wood Finish Stain (If applicable) @ 400-600 sf/gal		0		
	Sealer: 1908 Woodpride Interior Polyurethane Gloss Varnish @ 500-600 sf/gal (thinned 1 pint per gal.)		0		

DESCRIPTION		APPLICABLE TO			
Manufacturer	Catalog or Model No.	Kauai	Hawaii	Oahu	Maui
b. Devoe System (cont.)	Finish: (2 coats) 1908 Woodpride Interior Polyurethane Gloss Varnish @ 500-600 sf/gal (2.7-3.2 wet; 1.2-1.5 mils DFT per coat)		0		
c. Dutch Boy System	Prime: Dutch Boy 70-64 Alkyd Sanding Sealer (Tint to match wood) (400 SF per gal.)	0		0	0
	Finish: Dutch Boy V170-05 Urethane Clear Gloss (2 coats) (500 SF/gal)	0		0	0
d. Sinclair System	Filler: Tinted to Match Wood	0	0	0	0
	Finish: (Two Coats) Sinclair RV-152 Plast-O-Gloss (400 sq. ft./gal.)	0	0	0	0
13. Concrete Reservoirs (Interior)					
a. Benjamin Moore	Stripe Coat: Benjamin Moore M62 Potable Water Epoxy Gloss Coating; All Corners, Welds, & Sharp Edges (4.0-6.0 mils DFT)		0		
	Finish: Two or Three Coats; Benjamin Moore M62 Potable Water Epoxy Gloss Coating (4.0-6.0 mils DFT). Consult Data Sheet For Application Instructions		0		
b. Carboline	Super Hi Gard (epoxy) 891	0	0		0
c. Sika Chemical Corp.	Sika Gard 62 High Build Epoxy	0	0		0
d. Engard	Engard 460HS Chemical Resistant Epoxy	0	0		0

DESCRIPTION		APPLICABLE TO			
Manufacturer	Catalog or Model No.	Kauai	Hawaii	Oahu	Maui
e. ICI-Devoe System	Prime: ICI-Devoe Coatings PRE-PRIME 167 Epoxy Primer Sealer		0		
	Finish: ICI-Devoe Coatings BAR-RUST 233H, Multi-Purpose Epoxy Coating 4.0 - 6.0 DFT per coat		0		
14. Anti-Graffiti Coating System					
a. Benjamin Moore	Prime: Benjamin Moore M45/M46 Epoxy Mastic Coating (4.0-7.0 mils DFT)		0		
	Finish: Two Coats; Benjamin Moore M74/M75 Aliphatic Urethane Gloss (2.5-4.0 mils DFT)		0		
b. ICI-Devoe System	Prime: ICI Devoe Coatings Pre-prime 167 Penetrating Sealer Coverage varies depending on surface texture and porosity		0		
	Intermediate: ICI Devoe Coatings Bar-Rust 235 Multi-Purpose Epoxy Coating @ 130-250 sf/gal (5.9-11.7 mils wet; 4.0-8.0 mils DFT)		0		
	Finish: ICI-Devoe Coatings Devthane 379 Gloss Aliphatic Urethane @ 335-500 sf/gal (3.2-4.8 wet; 2.0-3.0 mils DFT)		0		

DESCRIPTION		APPLICABLE TO			
Manufacturer	Catalog or Model No.	Kauai	Hawaii	Oahu	Maui
B. Paint Schedule for Existing Surfaces					
1. Ferrous Metal Items (Interior and Exterior - Rust Retained)					
a. Benjamin Moore	Prime: Benjamin Moore M45/M46 Epoxy Mastic Coating (4.0-7.0 mils DFT)		0		
	Finish: Two Coats; Benjamin Moore M74/M75 Aliphatic Urethane Gloss (2.5-4.0 mils DFT)		0		
b. ICI-Devoe System	Prime: ICI-Devoe Bar-Rust 235 Multi-Purpose Epoxy Coating, 5.9-11.7 mils WFT, (4-8 mils DFT)	0	0	0	0
	Finish: ICI-Devoe Devthane 359 Aliphatic urethane Gloss Enamel, 6.7-10 mils WFT, (4-6 mils DFT)	0	0	0	0
Or	Finish: ICI Devoe Coatings Devthane 379 Gloss Aliphatic Urethane @ 335-500 sf/gal (3.2-4.8 wet; 2.0-3.0 mils DFT)		0		
c. Dupont System	Prime: Dupont 25P Epoxy Mastic (3-5 mils DFT)	0	0	0	0
	Finish: Dupont Imron 333 Polyurethane Enamel (2 mils DFT)	0	0	0	0
d. Rust-Oleum System	Prime: Rust-Oleum 9369 Epoxy Primer (2 mils DFT)	0	0	0	0
	Finish: Rust-Oleum 9400 system Rust-O-Thane (Polyurethane 2 mils DFT)	0	0	0	0
e. Sinclair System	Prime: Sinclair's PA 72 Corrosion Resistant Epoxy Metal Primer (2 mils DFT)	0	0	0	0
	Finish: Sinclair UR2 Sinthane Gloss Enamel (2 mils DFT)	0	0	0	0

DESCRIPTION		APPLICABLE TO			
Manufacturer	Catalog or Model No.	Kauai	Hawaii	Oahu	Maui
f. Valspar/Mobil System	Prime: Valspar/Mobil Val-Chem HI Build Epoxy, 89 Series, (4 mils DFT)	0	0	0	0
	Finish: Valspar/Mobil Mobilthane Enamel, 40 Series, 3 parts Base Component to 1 part 40-T-2 Curing Agent, (2 mils DFT) Aliphatic Urethane	0	0	0	0
g. Wasser High Tech Coatings	Surface Prep: SSPC SP2 for Light Service or SSPC SP3 for More Severe Service			0	
	Prime: MC-Prepbond (1.5 mils DFT) for SSPC SP2, or MC-Miozinc, Micaceous Iron Oxide/Zinc Rich, Single Component, Moisture-cure Polyurethane, (3 mils DFT) for SSPC SP3			0	
	Topcoat: MC-Luster, Single Component, Moisture-cure, Aliphatic Polyurethane (3 mils DFT)			0	
h. Carboline	Carboline 890 polyurethane				0
2. Existing Concrete, Masonry and Plaster (Exterior)					
a. Ameritone System	Prime: Ameritone E8051 Elastomeric Epoxy Ester Primer	0	0	0	0
	Finish: Ameritone W200 Exterior Vinyl Bond Acrylic Paint	0	0	0	0
b. Benjamin Moore	Prime: Benjamin Moore CLF29/30 Waterborne Epoxy Primer/Sealer (2.0-4.0 mils DFT)		0		
	Finish: Two Coats; Benjamin Moore 170 SuperSpec House and Trim Paint – Semi-Gloss Finish (1.1-2.0 mils DFT)		0		

DESCRIPTION		APPLICABLE TO			
Manufacturer	Catalog or Model No.	Kauai	Hawaii	Oahu	Maui
c. Dutch Boy System	Prime: 200-19 Dutch Boy-Alkyd Masonry Conditioner (150 SF per gal.)	0		0	0
	Finish: 217-XX Dutch Boy Exterior Latex Finish (400 SF per gal.)	0		0	0
d. ICI-Devoe System	Prime: ICI Devoe Coatings 4030 Tru-Glaze-WB Waterborne Epoxy Primer @ 200-270 sf/gal (4.0-8.0 mils wet; 2.0-4.0 mils DFT)		0	0	
	Finish: 2406 Dulux Professional Exterior 100% Acrylic Semi-Gloss Finish @ 300-400 sf/gal (4.1-5.4 wet; 1.5-2.0 mils DFT)		0		
Or	Finish: (2 coats) ICI Paint 2200-XXXX Decrashield Exterior 100% Acrylic Flat finish Paint; 1.06-2.1 mils DFT			0	
e. Sinclair System	Prime: (One Coat) Sinclair 18 Epoprime (@ a maximum rate of 250 sq. ft./gal.)	0	0	0	0
	Finish: (One Coat) Sinclair 4400 Aqua Life Enamel (@ a maximum rate of 350 sq. ft/gal)	0	0	0	0
Or	Finish: Sinclair 1300 Stuc-O-Life (@ a maximum rate of 300 sq. ft./gal.)	0	0	0	0
f. Valspar/Mobil System	Prime: Valspar/Mobil Exterior Latex Primer, 79-W-1 (2 mils DFT)	0	0	0	0
	Finish: Valspar/Mobil Water-Acrylic Enamel, 42 Series, (2 mils DFT)	0	0	0	0

DESCRIPTION		APPLICABLE TO			
Manufacturer	Catalog or Model No.	Kauai	Hawaii	Oahu	Maui
g. Wasser High Tech Coatings	Surface Prep: Scarify to produce a Profile			0	
	Prime: MC-CR, Single Component, moisture-cure, Aliphatic Polyurethane, (3 mils DFT)			0	
	Finish: MC-Luster, Single Component, Moisture-cure, Aliphatic Polyurethane, (3 mils DFT)			0	
3. Existing Concrete, Masonry and Plaster (Reservoir Exterior)					
a. Benjamin Moore	Prime: Benjamin Moore CLF29/30 Waterborne Epoxy Primer/Sealer (2.0-4.0 mils DFT)		0		
	Finish: Two Coats; Benjamin Moore 170 SuperSpec House and Trim Paint – Semi-Gloss Finish (1.1-2.0 mils DFT)		0		
b. ICI Devoe System	Prime: ICI Devoe Coatings 4030 Tru-Glaze-WB Waterborne Epoxy Primer @ 200-270 sf/gal (4.0-8.0 wet; 1.5-2.0 mils DFT)		0		
	Finish: ICI Devoe Coatings 4208 Devflex Waterborne Acrylic Gloss Enamel @ 330-430 sf/gal (3.5-5.0 wet; 1.5-2.0 mils DFT per coat)		0		

DESCRIPTION		APPLICABLE TO			
Manufacturer	Catalog or Model No.	Kauai	Hawaii	Oahu	Maui
VI. MISCELLANEOUS					
A. All Thread Rod	316 SS				0
B. Crystallization Products					
1. Xypex Concrete Waterproofing		0		0	
2. Kryton International	Krystol	0		0	
C. Hi-Build TNEME-TAR	46-H-413, for coating ARV's			0	
D. Pressure Gages and Appurtenances					
1. Gages:					
a. Ashcroft	3½" Face with 1/4" IPT connection	0	0		0
	3½" Type 1009, ¼" NPT lower connection, liquid filled, snubber Type 11128		0		
b. Kiener Co.			0		
c. Marsh	3½" Face with 1/4" IPT connection	0	0		0
d. Weiss	Pressure gauges, LF4S-2 stainless steel gauge, snubbers, gauge cocks		0		
e. Wika	Type 110.10,4"		0		

DESCRIPTION		APPLICABLE TO			
Manufacturer	Catalog or Model No.	Kauai	Hawaii	Oahu	Maui
2. Snubbers:					
a. Ray, 0-1000 psi Pressure Snubber		0	0		0
3. Handle Cock					
a. Marsh, Type 35 Lever handle cock with 1/4" male union connection by 1/4" female connection, brass		0	0		0
E. Tank Sliding Joint Material					
1. Wall					
a. Mueller	Klingersil 4401	0	0	0	0
2. Roof					
b. Rubatex	431N	0	0	0	0

Legend:
1 - Long body style only
2 - For maximum working pressure of 150 psi
3 - For use as a tapping valve only
4 - Not applicable for use with PVC pipes
5 - For use with PVC pipes only
6 - For Oahu only: Service saddle shall be bronze with double strap

Section 403 - STANDARD DETAILS

TABLE OF CONTENTS
DIVISION 400, Section 403 - STANDARD DETAILS

SECTION		DETAIL NOS.
	Application Table	403-1
I.	Concrete Reaction Blocks, Valve Anchor Blocks, Beams, Jackets (B)	
	A. Reinforced Concrete Jacket	B1
	B. Thrust Blocks	B2 - B13
	C. Valve Anchor Blocks	B14 - B15
	D. Concrete Thrust Beam	B16 - B23
II.	Chain Link Fence and Gate (F)	
	A. Chain Link Fence	F1 - F3
	B. Gate Security Details	F4 - F5
III.	Fire Hydrants and Appurtenances (FH)	
	A. 2 ½ " Standpipe	FH1
	B. Connection Layouts	FH2 - FH8
	C. Slab, Guard Post, and Curb Guard	FH9 - FH11
	D. Markers	FH12 - FH13
IV.	Service Laterals (L)	
	A. Kauai	L1 - L6
	B. Hawaii	L7 - L11
	C. Oahu	L12 - L22
	D. Maui	L23 - L38
V.	Meter Boxes, and 3-Inch and Larger Meters (M)	
	A. Box Installation and Miscellaneous Details	M1 - M15
	B. Compound, Detector Check, Turbine and FM Meters	M16 - M43

SECTION		DETAIL NOS.
VI.	Manholes (MH)	
A.	Type 'A' Manhole for Bevel Geared Gate Valve	MH1 - MH5
B.	Type 'A' Manhole for Butterfly Valves	MH6 - MH11
C.	Miscellaneous Details	MH12 - MH17
D.	Type 'B' Manhole	MH18
E.	Type 'C' Manhole	MH19
F.	Type 'D' Manhole for 2" Air Release Valves	MH20 - MH21
G.	Type 'E' Tapping Tee Manhole	MH22 - MH24
H.	Oversized Top Slab Detail	MH25
VII.	Trench Details, and Concrete Cylinder Pipe and Appurtenances (P)	
A.	Pipe Miscellaneous and Tap-In Tee Details	P1 - P8
B.	Excavation Payment Limits at Connection	P9
C.	Trench Details	P10 - P13
VIII.	Valves and Appurtenances (V)	
A.	Air Relief Valves	V1 - V7
B.	Backflow Preventers	V8 - V9
C.	Automatic Pressure Relief	V10
D.	Valve Box Installation and Miscellaneous Details	V11 - V17
E.	Valve Marker and Nut Extension	V18 - V19
F.	Cleanouts	V20 - V22
G.	ARV Installation in Type 'F' Manhole	V23

APPLICATION TABLE

Detail No.	Contents	Applicable To			
		Kauai	Hawaii	Oahu	Maui
	CONCRETE THRUST BLOCKS, VALVE ANCHOR BLOCKS, BEAMS, AND JACKETS (B)				
B1	Reinforced Concrete Jacket Typical Detail	0	0	0	0
B2	Horizontal Reaction Block for Water Mains	0			0
B3	Horizontal Thrust Block Minimum Bearing Areas	0	0	0	0
B4	Horizontal Thrust Block Minimum Bearing Areas	0	0	0	0
B5	Horizontal Thrust Block Minimum Bearing Areas	0	0	0	0
B6	Top Vertical Thrust Block Schedule	0	0	0	0
B7	Typical Thrust Block at Vertical Bends	0	0	0	0
B8	Typical Thrust Block w/ Straps for Connections at Vertical Bend	0	0	0	0
B9	Typical Thrust Block with Structural Strut for Connections	0	0	0	0
B10	Typical Thrust Block 6 to 22 1/2 Degree Conc. Cyl. Bend for 16" to 42" Connections Only	0		0	0
B11	Typical Thrust Block 22 1/2 to 45 Degree Conc. Cyl. Bend for 16" to 42" Connections Only	0		0	0
B12	Typical Thrust Block 45 to 67 1/2 Degree Conc. Cyl. Bend for 16" to 42" Connections Only	0		0	0
B13	Typical Thrust Block Conc. Cyl. Tee Connection (16" to 42")	0		0	0
B14	Gate Valve Anchor Block Non-Metallic Pipes			0	0
B15	Gate Valve Anchor Block Schedule	0		0	0
B16	Concrete Thrust Beam Typical Detail	0	0	0	0
B17	Concrete Thrust Beam Schedule	0	0	0	0
B18	Concrete Thrust Beam Schedule	0	0	0	0
B19	Concrete Thrust Beam for Reducer - Typical Detail	0	0	0	
B20	Concrete Thrust Beam for Reducer - Schedule	0	0	0	0

Detail No.	Contents	Applicable To			
		Kauai	Hawaii	Oahu	Maui
B21	Concrete Thrust Beam for Reducer - Schedule	0	0	0	0
B22	Concrete Thrust Beam for Offset - Typical Detail	0	0	0	0
B23	Concrete Thrust Beam for Offset - Schedule	0	0	0	0
	CHAIN LINK FENCE AND GATE (F)				
F1	Chain Link Fence	0	0	0	0
F2	Chain Link Fence Post and Pedestrian Gate	0	0	0	0
F3	Chain Link Fence Miscellaneous Details	0	0	0	0
F4	Chain Link Fence Security Switch Detail	0	0	0	
F5	Chain Link Fence Security Switch Detail	0	0	0	
	FIRE HYDRANTS AND APPURTENANCES (FH)				
FH1	2 1/2" Standpipe Detail	0			
FH2	Hydrant Connection Layout “A” (with Elbow)		0		
FH3	Hydrant Connection Layout “B” (Straight Run)		0		
FH4	Hydrant Connection Straight Run	0		0	
FH5	Hydrant Connection with Elbow	0		0	
FH6	Hydrant Connection Straight Run				0
FH7	Hydrant Connection with Elbow				0
FH8	Hydrant Connection Notes	0		0	0
FH9	Hydrant Conc. Slab & Reflector Post				0
FH10	Hydrant Concrete Slab and Guard Posts		0	0	
FH11	Hydrant Curb Guard	0	0	0	
FH12	Hydrant Marker Location for Streets	0		0	0
FH13	Hydrant Marker Location for Highways	0		0	0
	SERVICE LATERALS (L)				
L1	Single Service Lateral Plan, Profile & Material List	0			
L2	Double Service Lateral Plan, Profile & Material List	0			

Detail No.	Contents	Applicable To			
		Kauai	Hawaii	Oahu	Maui
L3	Fabricated Branch Pipe and Linesetter Detail	0			
L4	One Inch Meter Profile & Material List	0			
L5	1 1/2" Inch Meter Profile & Material List	0			
L6	Two-Inch Meter Profile & Material List	0			
L7	Copper Service Lateral for Multiple Meters		0		
L8	Service Laterals and Connections		0		
L9	Copper Service Lateral for 5/8" & 1" Meters		0		
L10	Service Lateral / Connection Material Schedule		0		
L11	Stabilization of 5/8-Inch Meter Easements		0		
L12	Service Laterals and Connections Standard Sizing Arrangements			0	
L13	Copper Service Lateral for Connection Type "X" Meter Box 5/8", 3/4", & 1" Meters			0	
L14	Copper Service Lateral for Connection Type "X" Meter Box 5/8", 3/4", & 1" Meters			0	
L15	Copper Service Lateral for Connection Type III Meter Box 1 1/2" and 2" Meters			0	
L16	Copper Service Lateral for Connection (Multiple Service)			0	
L17	Special Lateral and Connection Fitting Schedule			0	
L18	Material List for Copper Laterals			0	
L19	End Of Line Connection			0	
L20	Typical Detail for Installation of Ball Stop After Meter			0	
L21	New Lateral Installation Schematic Detail			0	
L22	Lateral Reconnection Schematic Detail			0	
L23	Service Laterals and Connections Standard Sizing Arrangements				0
L24	Typical Service Lateral				0
L25	Single Service Lateral (Type “A”, 5/8" & 3/4" Meters)				0
L26	Single Service Lateral (Type “A”, 5/8” & 3/4” Meters)				0
L27	Double Service Lateral (Type “A-1”, 5/8" & 3/4" Meters)				0

Detail No.	Contents	Applicable To			
		Kauai	Hawaii	Oahu	Maui
L28	Double Service Lateral (Type “A-1”, 5/8” & 3/4” Meters)				0
L29	Single Service Lateral (Type “B”, 1" Meter)				0
L30	Single Service Lateral (Type “B”, 1” Meter)				0
L31	Double Service Lateral (Type “B-1”, 1" Meter)				0
L32	Double Service Lateral (Type “B-1”, 1” Meter)				0
L33	Single Service Lateral (Type “C”, 1 1/2" Meter)				0
L34	Single Service Lateral (Type “C”, 1 1/2” Meter)				0
L35	Double Service Lateral (Type “C-1”, 1 1/2" Meter)				0
L36	Double Service Lateral (Type “C-1”, 1 1/2” Meter)				0
L37	Single Service Lateral (Type “D”, 2" Meter)				0
L38	Single Service Lateral (Type “D”, 2” Meter)				0
	METER BOXES, AND 3-INCH AND LARGER METERS (M)				
M1	Meter Box Type “B”	0	0	0	
M2	Cast Iron Cover for Type “B” Meter Box	0	0	0	
M3	Meter Box & Cover Type “X”	0	0	0	
M4	Meter Box Type III for 1 1/2" & 2" Meters	0		0	
M5	Meter Box Type III for 1 1/2" & 2" Meters	0		0	
M6	Meter Box Frame & Cover Cast Iron, Type III	0		0	
M7	Meter Box Frame & Cover Cast Iron Type IV for 3" & 4" Meters	0		0	
M8	Meter Box Cover Cast Iron, Type IV	0		0	
M9	Meter Box Frame & Cover Cast Iron Type V for 6" & 8" Meters	0		0	
M10	Meter Box Cover Cast Iron, Type V	0		0	
M11	Metal Manhole Cover (Non-Traffic Loading)				0
M12	1 1/2" & 2" Meter Manhole Standard Non-Traffic				0
M13	Standard 1", 1 1/2", & 2" Meter and Box Installation		0		

Detail No.	Contents	Applicable To			
		Kauai	Hawaii	Oahu	Maui
M14	Standard Meter Box Covers		0		
M15	Reading Cover Detail		0		
M16	Compound Meter and Box Installation		0		
M17	Compound Meter Cover Details		0		
M18	Detector Check Cover Details		0		
M19	Detector Check Meter Details		0	0	
M20	Model DC Detector Check Installation		0		
M21	MFM-MCT Meter and Box Installation		0		
M22	MFM-MCT Meter and Box Installation		0		
M23	Double-Check Detector Assembly Non-Traffic Manhole				0
M24	Reading Hole Cover Raised Surface Detail	0		0	
M25	Combination of Single Compound and Single Detector Check Meters			0	
M26	Meter Box Detail for Compound, DC and Turbine Meters			0	
M27	Single Compound Meter Installation Plan			0	
M28	Single Compound Meter Installation - Notes and Tables			0	
M29	Single Compound Meter Installation - Section			0	
M30	Single Detector Check Meter Installation			0	
M31	Single Detector Check Meter Installation			0	
M32	Turbine Meter Installation - Section			0	
M33	Turbine Meter Installation - Notes and Tables			0	
M34	8" x 2" FM Meter & Box Layout Fire and Domestic Uses - CMU Walls			0	
M35	8" x 2" FM Meter & Box Layout Fire and Domestic Uses - CMU Walls			0	
M36	8" x 2" FM Meter & Box, Box Details - CMU Walls			0	
M37	8" x 2" FM Meter & Box Layout Fire and Domestic Uses - Precast/Cast-In-Place Walls			0	
M38	8" x 2" FM Meter & Box Layout Fire and Domestic Uses - Precast/Cast-In-Place Walls			0	

Detail No.	Contents	Applicable To			
		Kauai	Hawaii	Oahu	Maui
M39	8" x 2" FM Meter & Box, Box Details - Precast/Cast-In-Place Walls			0	
M40	8" x 2" FM Meter & Box Cover Plate & Support Details			0	
M41	8" x 2" FM Meter & Box Identification Inserts and Clip Details			0	
M42	8" x 2" FM Meter & Box Reading Lid & Frame Details			0	
M43	Water Meter Box for Non-Sidewalk Areas			0	
	MANHOLES (MH)				
MH1	Type “A” Manhole (Traffic) for Bevel Geared Gate Valves, Cast-In-Place	0		0	
MH2	Type “A” Manhole (Traffic) for Bevel Geared Gate Valves, Cast-In-Place	0		0	
MH3	Type “A” Manhole (Traffic) for Bevel Geared Gate Valves, Cast-In-Place and Precast Wall Notes	0		0	
MH4	Type “A” Manhole (Traffic) for Bevel Geared Gate Valves, Precast	0		0	
MH5	Type “A” Manhole (Traffic) for Bevel Geared Gate Valves, Precast	0		0	
MH6	Type “A” Manhole (Traffic) for Butterfly Valves, Cast-In-Place	0		0	0
MH7	Type “A” Manhole (Traffic) for Butterfly Valves, Cast-In-Place	0		0	0
MH8	Type “A” Manhole (Traffic) for Butterfly Valves, Precast	0		0	0
MH9	Type “A” Manhole (Traffic) for Butterfly Valves, Precast	0		0	0
MH10	Type “A-1” Manhole (Non-Traffic) for Butterfly Valves, CMU				0
MH11	Type “A-1” Manhole (Non-Traffic) for Butterfly Valves, CMU				0
MH12	Manhole Detail of Lintel and Filler Typical Detail	0		0	0
MH13	Manhole Pipe Collar Detail	0		0	0

Detail No.	Contents	Applicable To			
		Kauai	Hawaii	Oahu	Maui
MH14	Metal Rung Details	0		0	0
MH15	Manhole Miscellaneous Details	0		0	0
MH16	Polypropylene Plastic Rung	0		0	
MH17	Manhole Frame & Cover Cast Iron, 24" Size	0	0	0	0
MH18	Type “B” Manhole General Arrangement, Precast Wall	0		0	0
MH19	Type “C” Manhole General Arrangement, Precast Wall	0		0	0
MH20	Type “D” Manhole for 2” Air Relief Valves, Cast-In-Place and Precast Walls	0		0	0
MH21	Type “D” Manhole for 2” Air Relief Valves, Cast-In-Place and Precast Walls	0		0	0
MH22	Type “E” Tapping Tee Manhole, Cast-In-Place Wall	0		0	
MH23	Type “E” Tapping Tee Manhole, Cast-In-Place Wall	0		0	
MH24	Type “E” Tapping Tee Manhole, Cast-In-Place Wall	0		0	
MH25	Oversize Top Slab Detail	0	0	0	0
	TRENCH DETAILS, AND CONCRETE CYLINDER PIPE AND APPURTENANCES (P)				
P1	Concrete Cylinder Pipe Miscellaneous Detail	0		0	0
P2	Concrete Cylinder Pipe Notes and Tables	0		0	0
P3	Concrete Cylinder Pipe Miscellaneous Detail	0		0	0
P4	Concrete Cylinder Pipe Miscellaneous Details	0		0	0
P5	Concrete Cylinder Pipe Miscellaneous Details	0		0	0
P6	Concrete Cylinder Pipe Notes	0		0	0
P7	Concrete Cylinder Pipe Tap-In Tee Details	0		0	0
P8	Concrete Cylinder Pipe Tap-In Tee Notes and Tables	0		0	0
P9	Excavation Payment Limits at Connection	0		0	
P10	Trench Backfill			0	0
P11	Waterline Trench Details Miscellaneous Details	0			
P12	Typical PVC Waterline Trench - Paved Area	0			
P13	Typical PVC Waterline Trench - Non-Paved Area	0			

Detail No.	Contents	Applicable To			
		Kauai	Hawaii	Oahu	Maui
	VALVES AND APPURTENANCES (V)				
V1	1" Air Valve Unit Detail		0		
V2	Air Relief Valve Box for 3/4" Air Relief Valve			0	
V3	Valve Frame & Cover Cast Iron, 6" Size	0		0	0
V4	Air Relief Valve Connection in Manhole			0	0
V5	Offset Air Relief Valve for 20” or Larger Mains	0		0	0
V6	Atmospheric Vacuum Breaker, Landscape Irrigation Detail			0	0
V7	Pressure Vacuum Breaker, Landscape Irrigation			0	0
V8	Air Gap Typical Detail	0	0	0	0
V9	Backflow Preventer Typical Installation	0	0	0	0
V10	Automatic Pressure Relief Valve	0			
V11	Cast Iron Valve Box Details	0			
V12	6" Sliding Valve Box Assembly				0
V13	Type "A" Valve Box	0	0	0	
V14	12" Valve Box Installation for Gate Valve		0	0	
V15	12" Valve Box Installation for Valve Operators		0	0	0
V16	12” Valve Box Frame & Cover		0	0	0
V17	Identification Tag for Manhole or Valve Box Cover	0	0	0	
V18	Valve Marker	0		0	0
V19	Valve Nut Extension	0	0		0
V20	2" Cleanout at Dead Ends		0		
V21	Cleanout				0
V22	Cleanouts and Riser	0		0	
V23	ARV Installation Type F Manhole				0

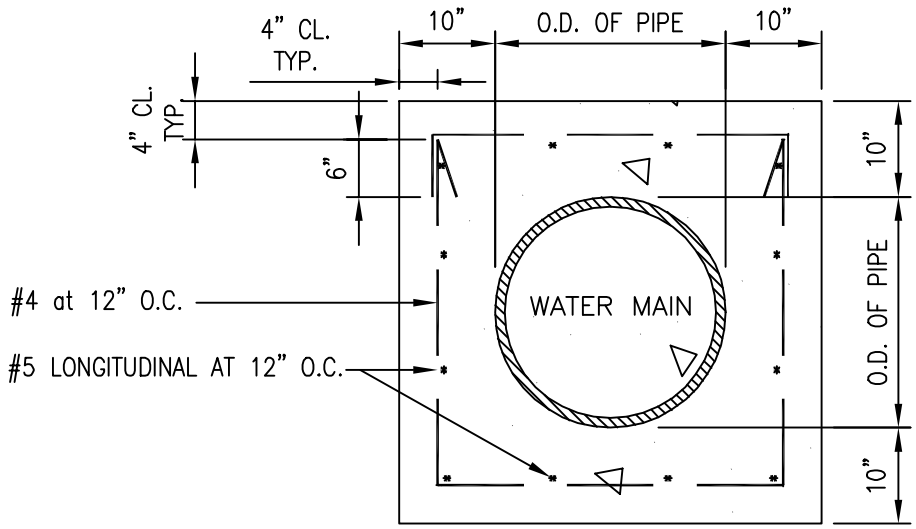

SECTION A–A

NOTE:

1. WHEREVER CONSTRUCTION JOINTS ARE REQUIRED, DWS APPROVED 6" RUBBER OR NEOPRENE WATERSTOPS OR CONCRETE BONDING AGENT APPROVED BY THE MANAGER SHALL BE INSTALLED.
2. NO CONCRETE JACKETING OF PVC PIPE OR EXISTING AC PIPE WILL BE ALLOWED.
3. CONCRETE SHALL BE DWS 2500 EXCEPT UNDER RESERVOIR FLOOR SLABS WHERE IT SHALL BE DWS 3500.
4. REINFORCING DESIGN APPLICABLE FOR STRAIGHT PIPE JACKETED SEGMENT. FOR SIPHON OR OFFSET, SUBMIT SHOP DRAWINGS.
5. PRECAST JACKETED WATERLINE SEGMENT SHALL BE DESIGNED AND STAMPED BY A LICENSED STRUCTURAL ENGINEER AND APPROVED BY MANAGER.

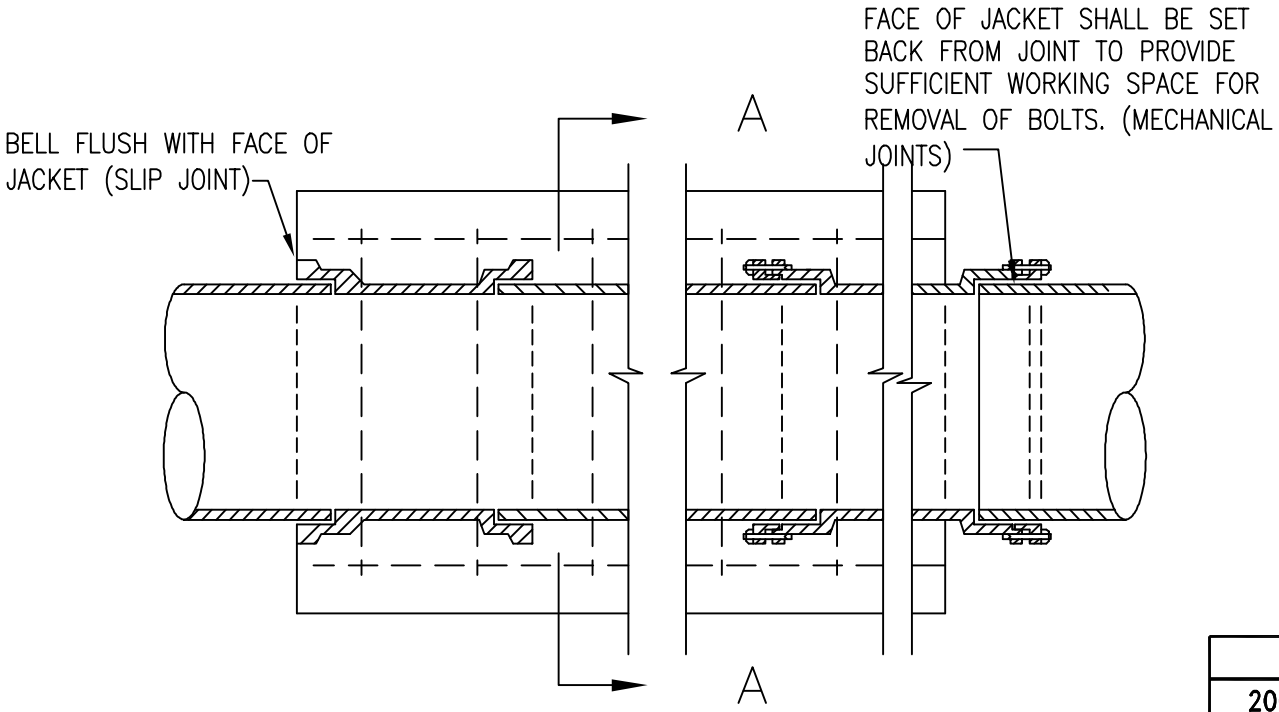

			2002
			REVISION
KAUAI OAHU MAUI HAWAII	REINFORCED CONCRETE JACKET TYPICAL DETAIL SCALE: NTS	STANDARD DETAILS	B1

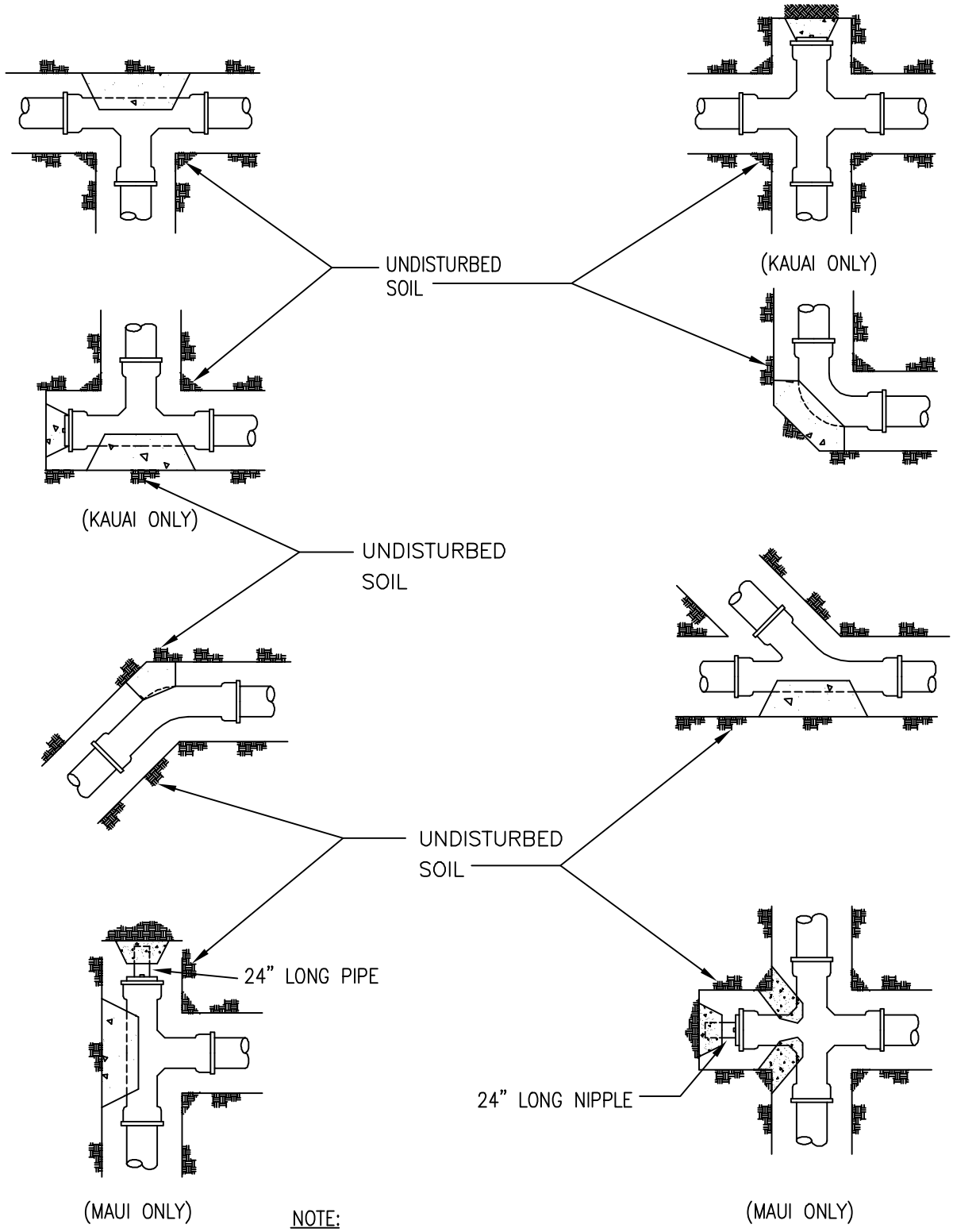

NOTE:

REFER TO DETAILS B3, B4 & B5 FOR THE SIZE OF REACTION BLOCKS. REACTION BLOCKS SHALL BEAR AGAINST UNDISTURBED SOIL. CONCRETE SHALL BE DWS 2500.

			2002
			REVISION
KAUAI MAUI	HORIZONTAL REACTION BLOCK FOR WATER MAINS SCALE: NTS	STANDARD DETAILS	B2

KAUAI
OAHU
MAUI
HAWAII

HORIZONTAL THRUST BLOCK

MINIMUM BEARING AREAS

SCALE: NTS

STANDARD DETAILS

B3

REVISION 2002

MINIMUM BEARING AREAS (SQ. FT.) FOR HORIZONTAL THRUST BLOCKS

PIPE SIZE	BEND	PRESSURE 250 PSI							PRESSURE 200 PSI							PRESSURE 150 PSI						
		TYPE OF SOIL CONDITION							TYPE OF SOIL CONDITION							TYPE OF SOIL CONDITION						
		A	B	C	D	E	F	G	A	B	C	D	E	F	G	A	B	C	D	E	F	G
4"	TEES, CAPS	6.5	3.5	2.0	1.5	1.0	1.0	1.0														
	1/4	9.0	4.5	3.0	2.5	1.5	1.0	1.0														
	1/8	5.0	2.5	1.5	1.5	1.0	1.0	1.0														
	1/16	2.5	1.5	1.0	1.0	1.0	1.0	1.0														
	1/32	1.5	1.0	1.0	1.0	1.0	1.0	1.0														
6"	TEES, CAPS	14.0	7.0	5.0	3.5	2.5	2.0	1.5														
	1/4	20.0	10.0	7.0	5.0	3.5	2.5	2.0														
	1/8	11.0	5.5	3.5	3.0	2.0	1.5	1.0														
	1/16	5.5	3.0	2.0	1.5	1.0	1.0	1.0														
	1/32	3.0	1.5	1.0	1.0	1.0	1.0	1.0														
8"	TEES, CAPS	25.0	12.5	8.5	6.5	4.0	3.0	2.5														
	1/4	35.0	18.0	12.0	9.0	6.0	4.5	3.5														
	1/8	20.0	9.5	6.5	5.0	3.0	2.5	2.0														
	1/16	10.0	5.0	3.5	2.5	1.5	1.0	1.0														
	1/32	5.0	2.5	1.5	1.5	1.0	1.0	1.0														
12"	TEES, CAPS	56.5	28.5	19.0	14.0	9.5	7.0	5.5	45.5	22.5	15.0	11.5	7.5	5.5	4.5	34.0	17.0	11.5	8.5	5.5	4.5	3.5
	1/4	80.0	40.0	26.5	20.0	13.5	10.0	8.0	64.0	32.0	21.5	16.0	11.0	8.0	6.5	48.0	24.0	16.0	12.0	8.0	6.0	5.0
	1/8	43.5	21.5	14.5	11.0	7.0	5.5	4.5	35.0	17.5	11.5	9.0	6.0	4.5	3.5	26.0	13.0	8.5	6.5	4.5	3.5	2.5
	1/16	22.0	11.0	7.5	5.5	3.5	3.0	2.5	17.5	9.0	6.0	4.5	3.0	2.5	2.0	13.0	6.5	4.5	3.5	2.0	1.5	1.5
	1/32	11.5	5.5	4.0	3.0	2.0	1.5	1.0	9.0	4.5	3.0	2.5	1.5	1.0	1.0	7.0	3.5	2.5	2.0	1.0	1.0	1.0

USE FIGURES UNDER 250 PSI

TYPE OF SOIL CONDITION	LATERAL BEARING PRESSURE
A. SOFT CLAY; FINE LOOSE SAND	500 LBS. PER SQ. FT.
B. SAND & CLAY; MIXED OR IN LAYERS; FINE CONFINED SAND	1000 LBS. PER SQ. FT.
C. HARD DRY CLAY	1500 LBS. PER SQ. FT.
D. COARSE SAND	2000 LBS. PER SQ. FT.
E. GRAVEL	3000 LBS. PER SQ. FT.
F. SOFT ROCK	4000 LBS. PER SQ. FT.
G. HARDPAN	5000 LBS. PER SQ. FT.

NOTE:

1. ACTUAL FIELD CONDITIONS AND SOIL TYPE SHALL BE VERIFIED IN THE FIELD. THE SCHEDULE, DIMENSIONS AND DETAILS AS SHOWN ARE PROVIDED AS A GUIDE ONLY. THE CONTRACTOR OR ENGINEER WHO PREPARED THE PLANS SHALL SUBMIT THE FINAL DESIGN AND DETAILS TO THE MANAGER FOR REVIEW AND APPROVAL AFTER FIELD VERIFICATION AND PRIOR TO INSTALLATION. FOR OAHU ONLY, THE DEPARTMENT WILL FURNISH THE FINAL DESIGN AND DETAILS FOR PROJECTS AWARDED BY THE MANAGER.
2. FOR KAUAI AND MAUI, SEE PLATE B2 FOR ADDITIONAL NOTES.

KAUAI
OAHU
MAUI
HAWAII

HORIZONTAL THRUST BLOCK

MINIMUM BEARING AREAS

SCALE: NTS

STANDARD DETAILS

B4

2002 REVISION

MINIMUM BEARING AREAS (SQ. FT.) FOR HORIZONTAL THRUST BLOCKS

PIPE SIZE	BEND	PRESSURE 250 PSI							PRESSURE 200 PSI							PRESSURE 150 PSI						
		TYPE OF SOIL CONDITION							TYPE OF SOIL CONDITION							TYPE OF SOIL CONDITION						
		A	B	C	D	E	F	G	A	B	C	D	E	F	G	A	B	C	D	E	F	G
16"	TEES, CAPS	101.0	50.5	34.0	25.5	17.0	13.0	10.5	80.5	40.5	27.0	20.5	13.5	10.5	8.5	60.5	30.5	20.5	15.5	10.5	8.0	6.5
	1/4	142.5	71.5	47.5	35.5	24.0	18.0	14.5	114.0	57.0	38.0	28.5	19.0	14.5	11.5	85.5	43.0	28.4	21.5	14.5	11.0	8.5
	1/8	77.0	38.5	26.0	19.5	13.0	10.0	8.0	62.0	31.0	20.5	15.5	10.5	8.0	6.5	46.5	23.5	15.5	11.5	8.0	6.0	5.0
	1/16	39.5	20.0	13.5	10.0	6.5	5.0	4.0	31.5	16.0	10.5	8.0	5.5	4.0	3.5	23.5	12.0	8.0	6.0	4.0	3.0	2.5
	1/32	20.0	10.0	7.0	5.0	3.5	2.5	2.0	16.0	8.0	5.5	4.0	3.0	2.0	2.0	12.0	6.0	4.0	3.0	2.0	1.5	1.5
18"	TEES, CAPS	127.5	64.0	42.5	32.0	21.5	16.0	13.0	102.0	51.0	34.0	25.5	17.0	13.0	10.5	76.5	38.5	25.5	19.5	13.0	10.0	8.0
	1/4	180.0	90.0	60.0	45.0	30.0	22.5	18.0	144.0	72.0	48.0	36.0	24.0	18.0	14.5	108.0	54.0	36.0	27.0	18.0	13.5	11.0
	1/8	97.5	49.0	32.5	24.5	16.5	12.5	10.0	78.0	39.0	26.0	19.5	13.0	10.0	8.0	58.5	29.5	19.5	15.0	10.0	7.5	6.0
	1/16	50.0	25.0	16.5	12.5	8.5	6.5	5.0	40.0	20.0	13.5	10.0	7.0	5.0	4.0	30.0	15.0	10.0	7.5	5.0	4.0	3.0
	1/32	25.0	12.5	8.5	6.5	4.5	3.5	2.5	20.0	10.0	7.0	5.0	3.5	2.5	2.0	15.0	7.5	5.0	4.0	2.5	2.0	2.0
20"	TEES, CAPS	157.5	79.0	52.5	39.5	26.5	20.0	16.0	126.0	63.0	42.0	31.5	21.0	16.0	13.0	94.5	47.5	31.5	24.0	16.0	12.0	9.5
	1/4	222.5	111.5	74.0	55.5	37.0	28.0	22.5	178.0	89.0	59.5	44.5	30.0	22.5	18.0	133.5	67.0	44.5	33.5	22.5	17.0	13.5
	1/8	120.5	60.5	40.5	30.5	20.0	15.0	12.0	96.5	48.5	32.5	24.0	16.0	12.0	10.0	72.5	36.5	24.0	18.0	12.0	9.0	7.5
	1/16	61.5	31.0	20.5	15.5	10.5	8.0	6.5	49.0	24.5	16.5	12.5	8.5	6.5	5.0	37.0	18.5	12.5	9.5	6.5	5.0	4.0
	1/32	31.0	15.5	10.5	8.0	5.5	4.0	3.5	25.0	12.5	8.5	6.5	4.5	3.5	2.5	18.5	9.5	6.5	4.5	3.5	2.5	2.0
24"	TEES, CAPS	226.5	113.5	75.5	57.0	38.0	28.5	23.0	181.0	90.5	60.5	45.5	30.5	23.0	18.5	136.0	68.0	45.5	34.0	23.0	17.0	14.0
	1/4	320.0	160.0	107.0	80.0	53.5	40.0	32.0	256.0	128.0	85.5	64.0	43.0	32.0	26.0	192.0	96.0	64.0	48.0	32.0	24.0	19.5
	1/8	173.5	87.0	58.0	43.5	29.0.	22.0	17.5	138.5	69.5	46.5	35.0	23.5	17.5	14.0	104.0	52.0	35.0	26.0	17.5	13.0	10.5
	1/16	88.5	44.5	29.5	22.5	15.0	11.0	9.0	71.0	35.5	24.0	18.0	12.0	9.0	7.5	53.0	26.5	18.0	13.5	15.0	7.0	5.5
	1/32	44.5	22.5	15.0	11.5	7.5	5.5	4.5	35.5	18.0	12.0	9.0	6.0	4.5	3.5	27.0	13.5	9.0	7.0	4.5	3.5	3.0

TYPE OF SOIL CONDITION	LATERAL BEARING PRESSURE
A. SOFT CLAY; FINE LOOSE SAND	500 LBS. PER SQ. FT.
B. SAND & CLAY; MIXED OR IN LAYERS; FINE CONFINED SAND	1000 LBS. PER SQ. FT.
C. HARD DRY CLAY	1500 LBS. PER SQ. FT.
D. COARSE SAND	2000 LBS. PER SQ. FT.
E. GRAVEL	3000 LBS. PER SQ. FT.
F. SOFT ROCK	4000 LBS. PER SQ. FT.
G. HARDPAN	5000 LBS. PER SQ. FT.

NOTE:

1. ACTUAL FIELD CONDITIONS AND SOIL TYPE SHALL BE VERIFIED IN THE FIELD. THE SCHEDULE, DIMENSIONS AND DETAILS AS SHOWN ARE PROVIDED AS A GUIDE ONLY. THE CONTRACTOR OR ENGINEER WHO PREPARED THE PLANS SHALL SUBMIT THE FINAL DESIGN AND DETAILS TO THE MANAGER FOR REVIEW AND APPROVAL AFTER FIELD VERIFICATION AND PRIOR TO INSTALLATION. FOR OAHU ONLY, THE DEPARTMENT WILL FURNISH THE FINAL DESIGN AND DETAILS FOR PROJECTS AWARDED BY THE MANAGER.
2. FOR KAUAI AND MAUI, SEE PLATE B2 FOR ADDITIONAL NOTES.

KAUAI
OAHU
MAUI
HAWAII

HORIZONTAL THRUST BLOCK

MINIMUM BEARING AREAS

SCALE: NTS

STANDARD DETAILS

B5

2002 REVISION

MINIMUM BEARING AREAS (SQ. FT.) FOR HORIZONTAL THRUST BLOCKS

PIPE SIZE	BEND	PRESSURE 250 PSI							PRESSURE 200 PSI							PRESSURE 150 PSI						
		TYPE OF SOIL CONDITION							TYPE OF SOIL CONDITION							TYPE OF SOIL CONDITION						
		A	B	C	D	E	F	G	A	B	C	D	E	F	G	A	B	C	D	E	F	G
30"	TEES, CAPS	353.5	177.0	118.0	88.5	59.0	44.5	35.5	283.0	141.5	94.5	71.0	47.5	35.5	28.5	212.5	106.5	71.0	53.5	35.5	27.0	21.5
	1/4	500.0	250.0	167.0	125.0	83.5	62.5	50.0	400.0	200.0	133.5	100.0	67.0	50.0	40.0	300.0	150.0	100.0	75.0	50.0	37.5	30.0
	1/8	270.5	135.5	90.5	68.0	45.5	34.0	27.5	216.5	108.5	72.5	54.5	36.5	27.5	22.0	162.5	81.5	54.5	41.0	27.5	20.5	16.5
	1/16	138.0	69.0	46.0	34.5	23.0	17.5	14.0	110.5	55.5	37.0	28.0	18.5	14.0	11.0	83.0	41.5	28.0	21.0	14.0	10.5	8.5
	1/32	69.5	35.0	23.5	17.5	11.5	9.0	7.0	55.5	28.0	18.5	14.0	9.5	7.0	5.5	42.0	21.0	14.0	10.5	7.0	5.5	4.5
36"	TEES, CAPS	509.0	254.5	170.0	127.5	85.0	64.0	51.0	407.5	204.0	136.0	102.0	68.0	51.0	41.0	305.5	153.0	102.0	76.5	51.0	38.5	31.0
	1/4	720.0	360.0	240.0	180.0	120.0	90.0	72.0	576.0	288.0	192.0	144.0	96.0	72.0	58.0	432.0	216.0	144.0	108.0	72.0	54.0	43.5
	1/8	390.0	195.0	130.0	97.5	65.0	49.0	39.0	312.0	156.0	104.0	78.0	52.0	39.0	31.5	234.0	117.0	78.0	58.4	39.0	29.5	23.5
	1/16	199.0	99.5	66.5	50.0	33.5	25.0	20.0	159.0	79.5	53.0	40.0	26.5	20.0	16.0	119.5	60.0	40.0	30.0	20.0	15.0	12.0
	1/32	100.0	50.0	33.5	25.0	17.0	12.5	10.0	80.0	40.0	27.0	20.0	13.5	10.0	8.0	60.0	30.0	20.0	15.0	10.0	7.5	6.0
42"	TEES, CAPS	693.0	346.5	231.0	173.5	115.5	87.0	69.5	554.5	277.5	185.0	139.0	92.5	69.5	55.5	416.0	208.0	139.0	104.0	69.5	52.0	42.0
	1/4	980.0	490.0	327.0	245.0	163.5	122.5	98.0	784.0	392.0	261.5	196.0	131.0	98.0	78.5	588.0	294.0	196.0	147.0	98.0	74.0	59.0
	1/8	530.5	265.5	177.0	132.5	88.5	66.5	53.0	424.5	212.5	141.5	106.0	71.0	53.0	42.5	319.5	159.5	106.0	79.5	53.0	40.0	32.0
	1/16	270.5	135.5	90.5	68.0	45.0	34.0	27.0	216.5	108.5	72.5	54.5	36.0	27.0	22.0	162.5	81.5	54.1	40.5	27.0	20.5	16.5
	1/32	136.0	68.0	45.5	34.0	23.0	17.0	14.0	109.0	54.5	36.5	27.5	18.5	14.0	11.0	81.5	41.0	27.5	20.5	14.0	10.5	8.5

TYPE OF SOIL CONDITION	LATERAL BEARING PRESSURE
A. SOFT CLAY; FINE LOOSE SAND	500 LBS. PER SQ. FT.
B. SAND & CLAY; MIXED OR IN LAYERS; FINE CONFINED SAND	1000 LBS. PER SQ. FT.
C. HARD DRY CLAY	1500 LBS. PER SQ. FT.
D. COARSE SAND	2000 LBS. PER SQ. FT.
E. GRAVEL	3000 LBS. PER SQ. FT.
F. SOFT ROCK	4000 LBS. PER SQ. FT.
G. HARDPAN	5000 LBS. PER SQ. FT.

NOTE:

1. ACTUAL FIELD CONDITIONS AND SOIL TYPE SHALL BE VERIFIED IN THE FIELD. THE SCHEDULE, DIMENSIONS AND DETAILS AS SHOWN ARE PROVIDED AS A GUIDE ONLY. THE CONTRACTOR OR ENGINEER WHO PREPARED THE PLANS SHALL SUBMIT THE FINAL DESIGN AND DETAILS TO THE MANAGER FOR REVIEW AND APPROVAL AFTER FIELD VERIFICATION AND PRIOR TO INSTALLATION. FOR OAHU ONLY, THE DEPARTMENT WILL FURNISH THE FINAL DESIGN AND DETAILS FOR PROJECTS AWARDED BY THE MANAGER.
2. FOR KAUAI AND MAUI, SEE PLATE B2 FOR ADDITIONAL NOTES.

TOP VERTICAL THRUST BLOCK SCHEDULE

PIPE SIZE	BEND	PRESSURE 250 PSI						PRESSURE 200 PSI						PRESSURE 150 PSI					
		CONCRETE BLOCK				HANGER	"X" BAR	CONCRETE BLOCK				HANGER	"X" BAR	CONCRETE BLOCK				HANGER	"X" BAR
		A	B	C	D			A	B	C	D			A	B	C	D		
4"	1/4	4'-6"	4'-0"	4'-0"	2'-6"	(2)#4	(2)#4												
	1/8	3'-9"	3'-0"	1'-6"	2'-6"	(2)#3	(2)#3												
	1/16	2'-6"	2'-3"	1'-9"	2'-6"	(2)#3	(2)#3												
	1/32	2'-3"	1'-6"	1'-3"	2'-6"	(2)#3	(2)#3												
6"	1/4	4'-6"	4'-3"	4'-3"	4'-6"	(2)#5	(2)#5												
	1/8	5'-0"	3'-9"	1'-6"	3'-0"	(2)#4	(2)#4												
	1/16	3'-9"	3'-3"	2'-6"	2'-6"	(2)#3	(2)#3												
	1/32	3'-0"	2'-3"	2'-0"	2'-6"	(2)#3	(2)#3												
8"	1/4	5'-3"	5'-0"	5'-0"	5'-3"	(2)#6	(2)#6												
	1/8	5'-3"	4'-9"	2'-3"	4'-0"	(2)#5	(2)#5												
	1/16	5'-9"	3'-6"	2'-6"	2'-6"	(2)#4	(2)#4												
	1/32	3'-6"	2'-9"	2'-6"	2'-6"	(2)#3	(2)#3												
12"	1/4	6'-6"	7'-0"	7'-0"	6'-6"	(3)#7	(2)#7	6'-3"	6'-3"	6'-3"	5'-6"	(3)#7	(2)#7	6'-0"	6'-0"	6'-0"	4'-6"	(2)#7	(2)#7
	1/8	6'-3"	5'-9"	2'-9"	5'-6"	(2)#7	(2)#7	5'-6"	5'-6"	2'-9"	4'-6"	(2)#6	(2)#6	5'-0"	5'-3"	2'-9"	3'-9"	(2)#6	(2)#6
	1/16	5'-6"	4'-6"	3'-6"	4'-0"	(2)#5	(2)#5	5'-8"	4'-6"	3'-4"	2'-6"	(3)#4	(2)#4	6'-0"	4'-0"	2'-9"	2'-0"	(2)#4	(2)#4
	1/32	5'-3"	4'-3"	3'-9"	2'-6"	(2)#4	(2)#4	4'-3"	3'-9"	3'-3"	2'-0"	(2)#3	(2)#3	4'-0"	3'-0"	2'-6"	2'-0"	(2)#3	(2)#3

USE FIGURES UNDER 250 PSI

NOTE:

1. ACTUAL FIELD CONDITIONS SHALL BE VERIFIED IN THE FIELD. THE SCHEDULE, DIMENSIONS AND DETAILS AS SHOWN ARE PROVIDED AS A GUIDE ONLY. THE CONTRACTOR OR ENGINEER WHO PREPARED THE PLANS SHALL SUBMIT THE FINAL DESIGN AND DETAILS TO THE MANAGER FOR REVIEW AND APPROVAL AFTER FIELD VERIFICATION AND PRIOR TO INSTALLATION. FOR OAHU ONLY, THE DEPARTMENT WILL FURNISH THE FINAL DESIGN AND DETAILS FOR PROJECTS AWARDED BY THE MANAGER.
2. DIMENSIONS IN SCHEDULE REFER TO B7.
3. SCHEDULE IS NOT APPLICABLE TO BLOCKS FULLY OR PARTLY SUBMERGED IN WATER.
4. SAFETY FACTOR 1.5 BASED ON PIPE LOCATION MINIMUM 2' BELOW GROUND.

KAUAI
OAHU
MAUI
HAWAII

TOP VERTICAL
THRUST BLOCK SCHEDULE
SCALE: NTS

STANDARD DETAILS

B6

REVISION 2002

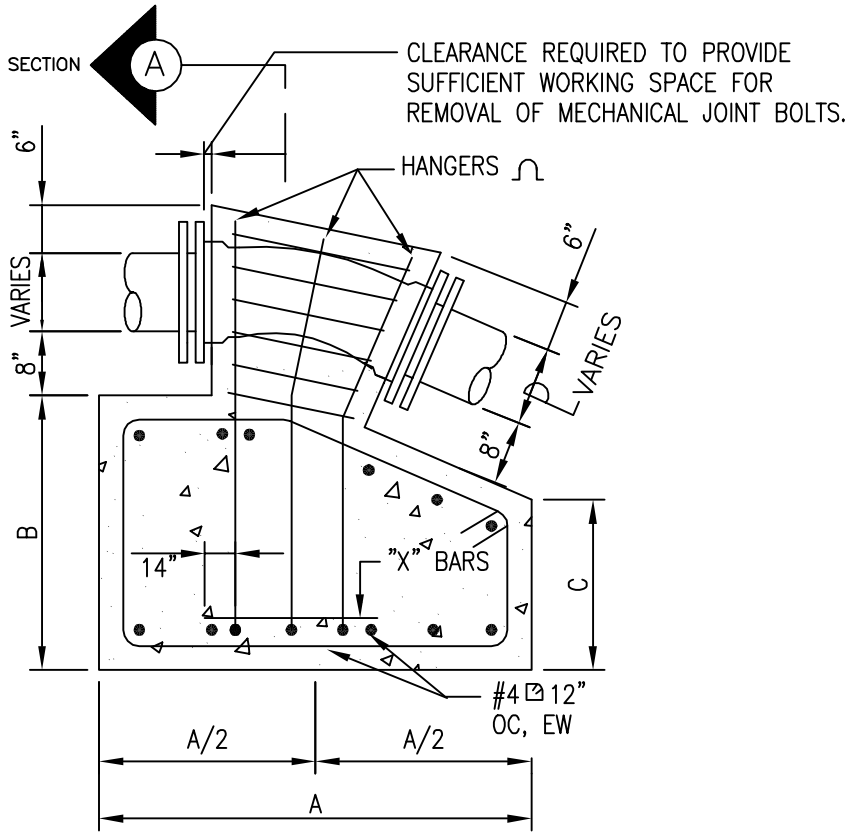

ELEVATION

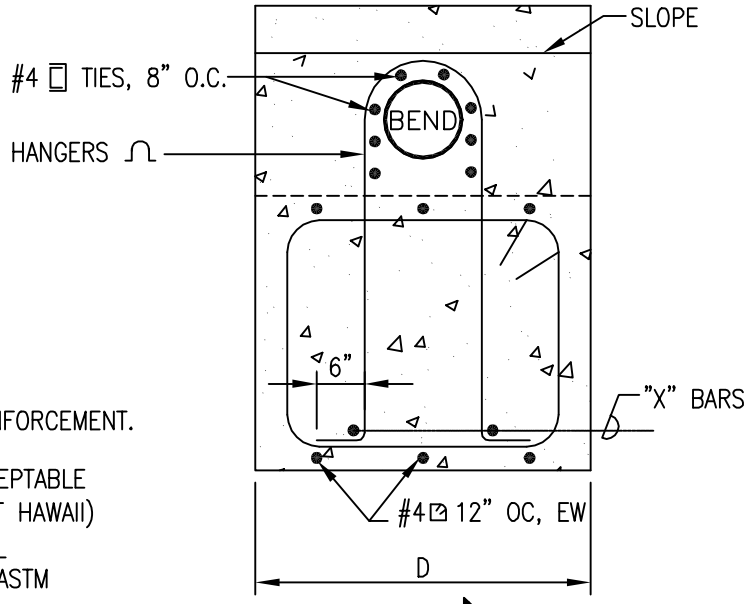

SECTION A

NOTES:

1. DWS 2500 CONCRETE.
2. MIN. 2" COVER OVER ALL REINFORCEMENT.
3. SEE B6 FOR SCHEDULE.
4. AWWA C153 FITTINGS NOT ACCEPTABLE FOR THIS APPLICATION (EXCEPT HAWAII)
5. UNLESS OTHERWISE NOTED, ALL REINFORCING BARS SHALL BE ASTM A615, GRADE 60

			2002
			REVISION
KAUAI OAHU MAUI HAWAII	**TYPICAL THRUST BLOCK** AT VERTICAL BENDS SCALE: NTS	STANDARD DETAILS	B7

KAUAI
OAHU
MAUI
HAWAII

TYPICAL THRUST BLOCK W/ STRAPS FOR CONNECTIONS AT VERTICAL BEND

SCALE: NTS

STANDARD DETAILS

B8

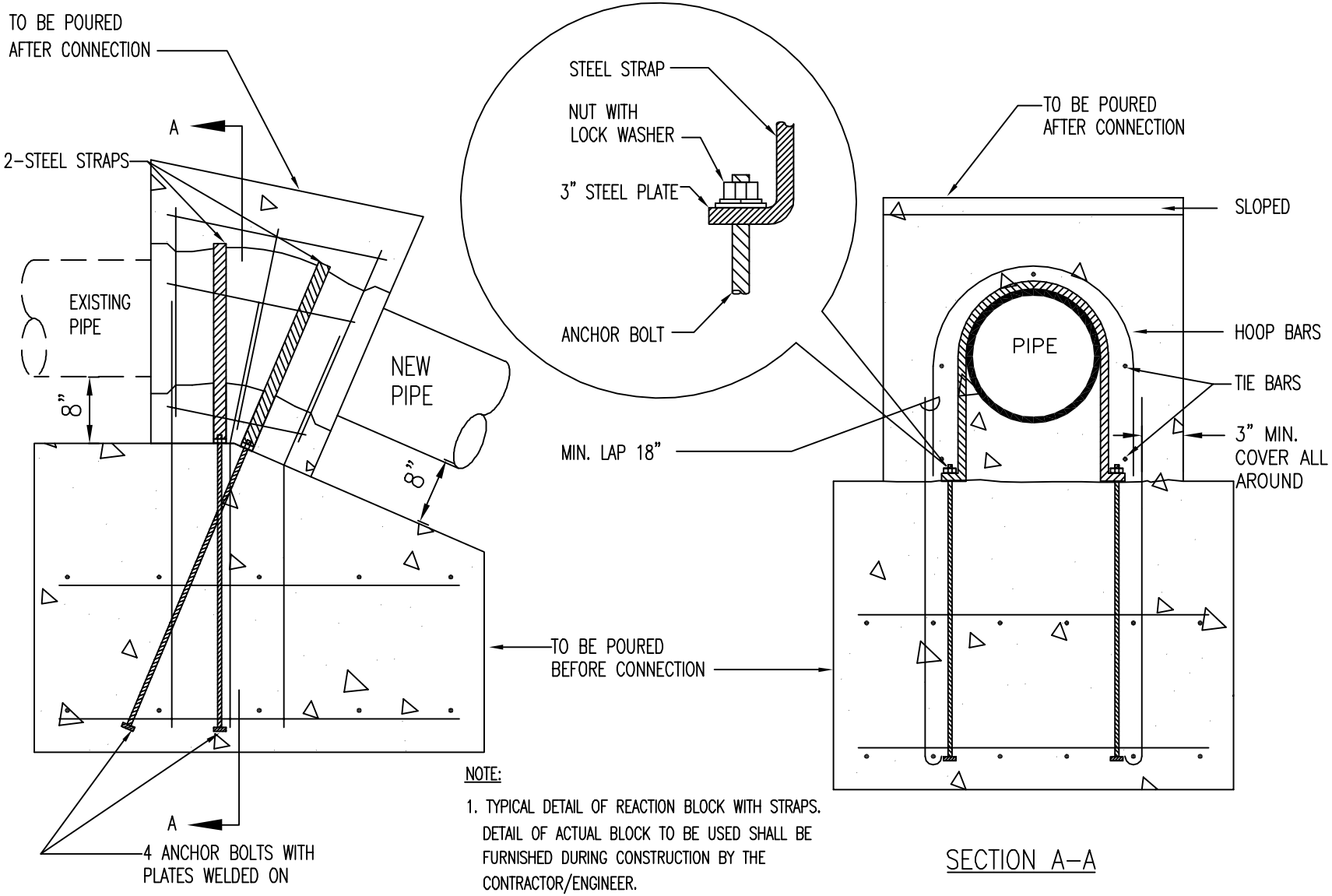

NOTE:

1. TYPICAL DETAIL OF REACTION BLOCK WITH STRAPS. DETAIL OF ACTUAL BLOCK TO BE USED SHALL BE FURNISHED DURING CONSTRUCTION BY THE CONTRACTOR/ENGINEER.
2. ANCHOR BOLTS SHALL BE PLACED PERPENDICULAR TO THE BEND OF THE STRAP.
3. AWWA C153 FITTINGS NOT ACCEPTABLE FOR THIS APPLICATION (EXCEPT HAWAII)

REVISION 2002

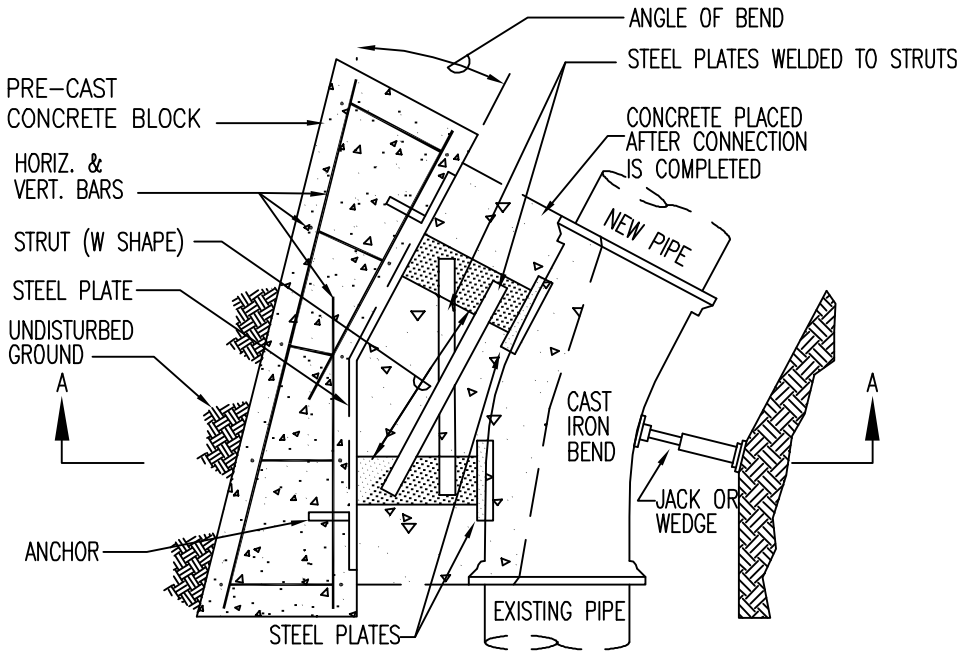

PLAN

NOTE:

ACTUAL FIELD CONDITIONS AND SOIL TYPE SHALL BE VERIFIED IN THE FIELD. THE SCHEDULE, DIMENSIONS AND DETAILS AS SHOWN ARE PROVIDED AS A GUIDE ONLY. THE CONTRACTOR OR ENGINEER WHO PREPARED THE PLANS SHALL SUBMIT THE FINAL DESIGN AND DETAILS TO THE MANAGER FOR REVIEW AND APPROVAL AFTER FIELD VERIFICATION AND PRIOR TO INSTALLATION. FOR OAHU ONLY, THE DEPARTMENT WILL FURNISH THE FINAL DESIGN AND DETAILS FOR PROJECTS AWARDED BY THE MANAGER.

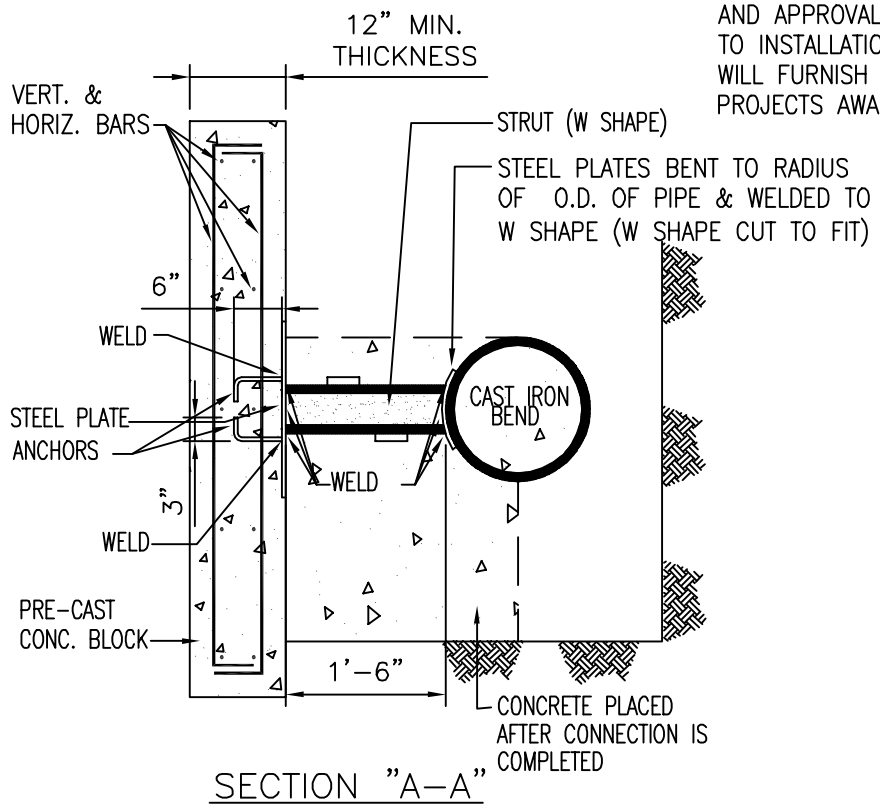

SECTION "A-A"

			2002
			REVISION
KAUAI OAHU MAUI HAWAII	**TYPICAL THRUST BLOCK** WITH STRUCTURAL STRUT FOR CONNECTIONS SCALE: NTS	STANDARD DETAILS	B9

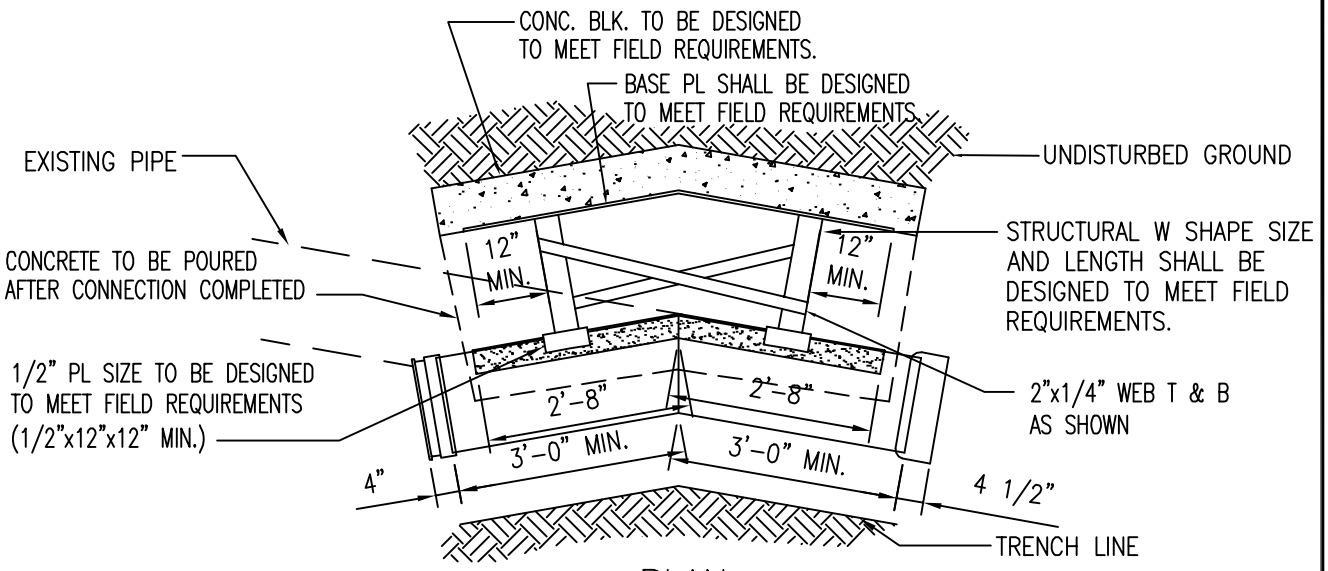

PLAN

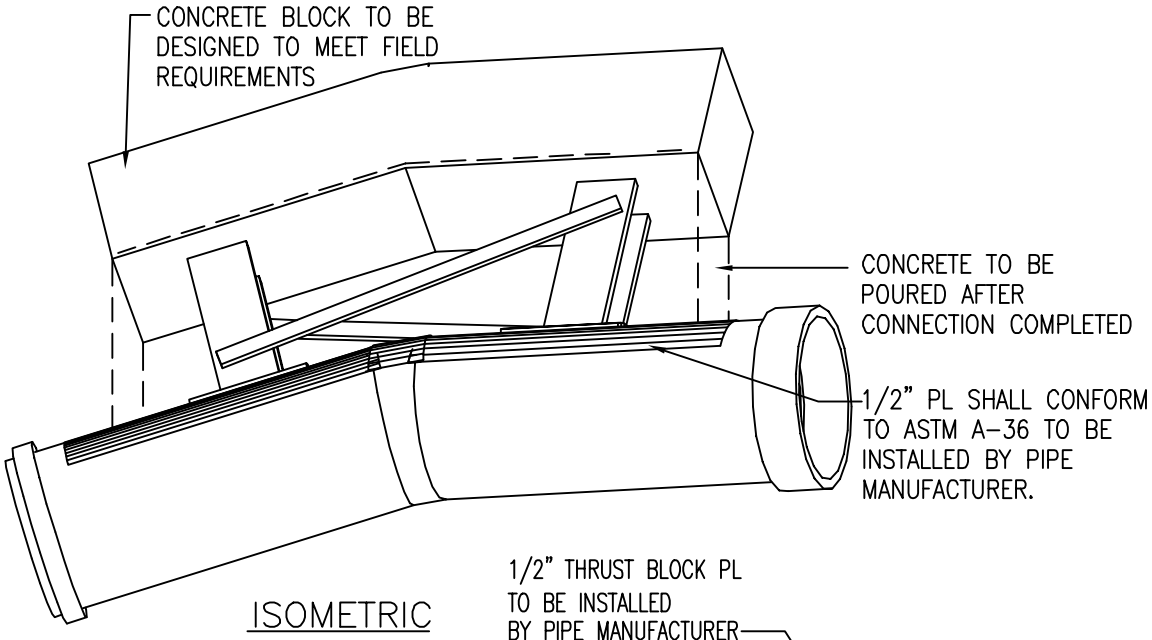

ISOMETRIC

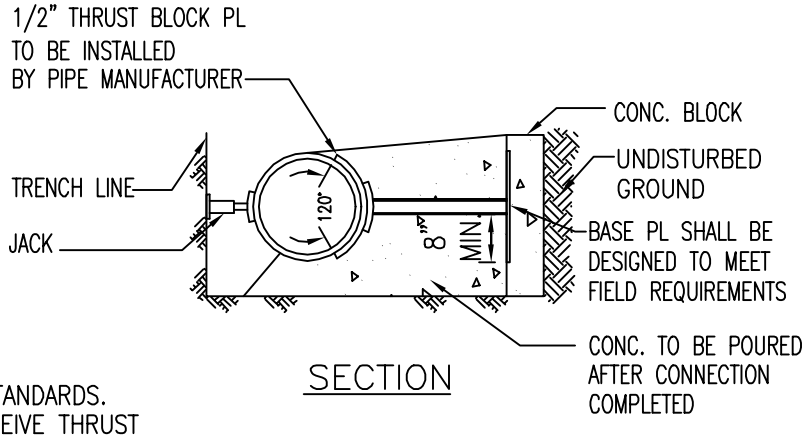

SECTION

NOTES:
1. ALL WELDS SHALL CONFORM TO AWS STANDARDS.
2. PL SHALL BE UNCOATED READY TO RECEIVE THRUST STRUTS AND APPURTENANCES.
3. DELIVER AT REQUEST.
4. NUMBER OF STRUTS TO BE USED MAY VARY ACCORDING TO THE WORKING PRESSURE.

	2002
	REVISION

KAUAI OAHU MAUI	**TYPICAL THRUST BLOCK** **6° TO 22 1/2° CONCRETE CYLINDER BEND** **FOR 16" TO 42" CONNECTIONS ONLY** SCALE: NTS	STANDARD DETAILS	B10

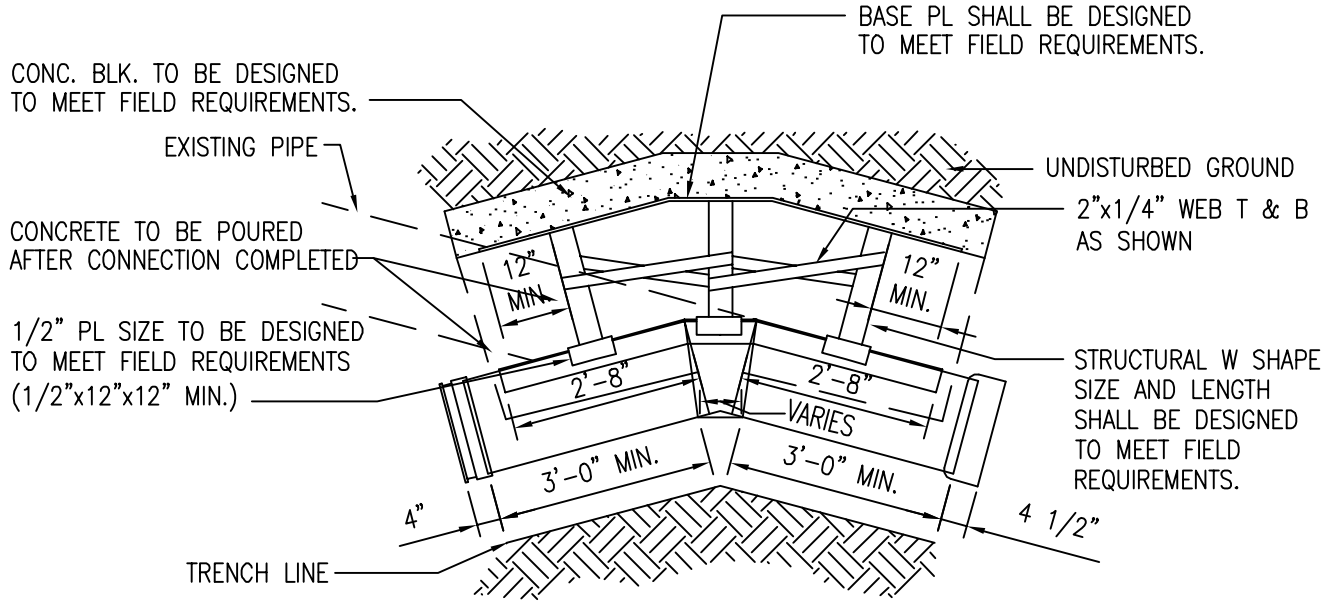

PLAN

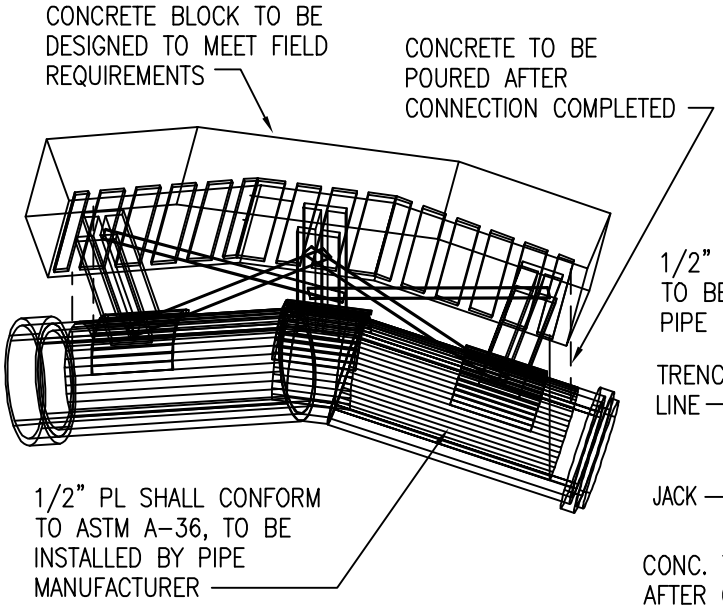

ISOMETRIC

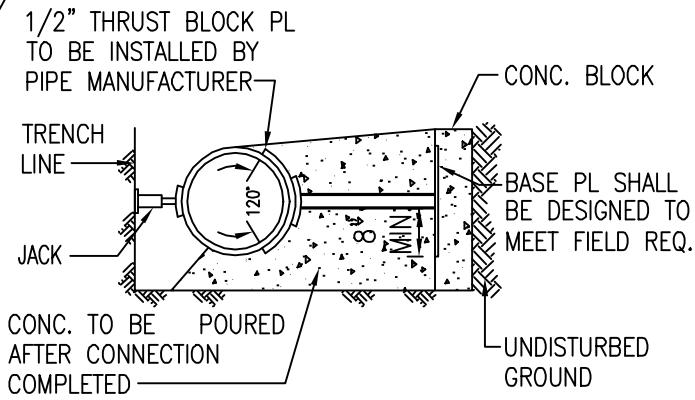

SECTION

NOTES:

1. ALL WELDS SHALL CONFORM TO AWS STANDARDS.
2. PL SHALL BE UNCOATED READY TO RECEIVE THRUST STRUTS AND APPURTENANCES.
3. DELIVER AT REQUEST.
4. NUMBER OF STRUTS TO BE USED MAY VARY ACCORDING TO THE WORKING PRESSURE.

			2002
			REVISION
KAUAI OAHU MAUI	TYPICAL THRUST BLOCK 22 1/2° TO 45° CONCRETE CYLINDER BEND FOR 16" TO 42" CONNECTIONS ONLY SCALE: NTS	STANDARD DETAILS	B11

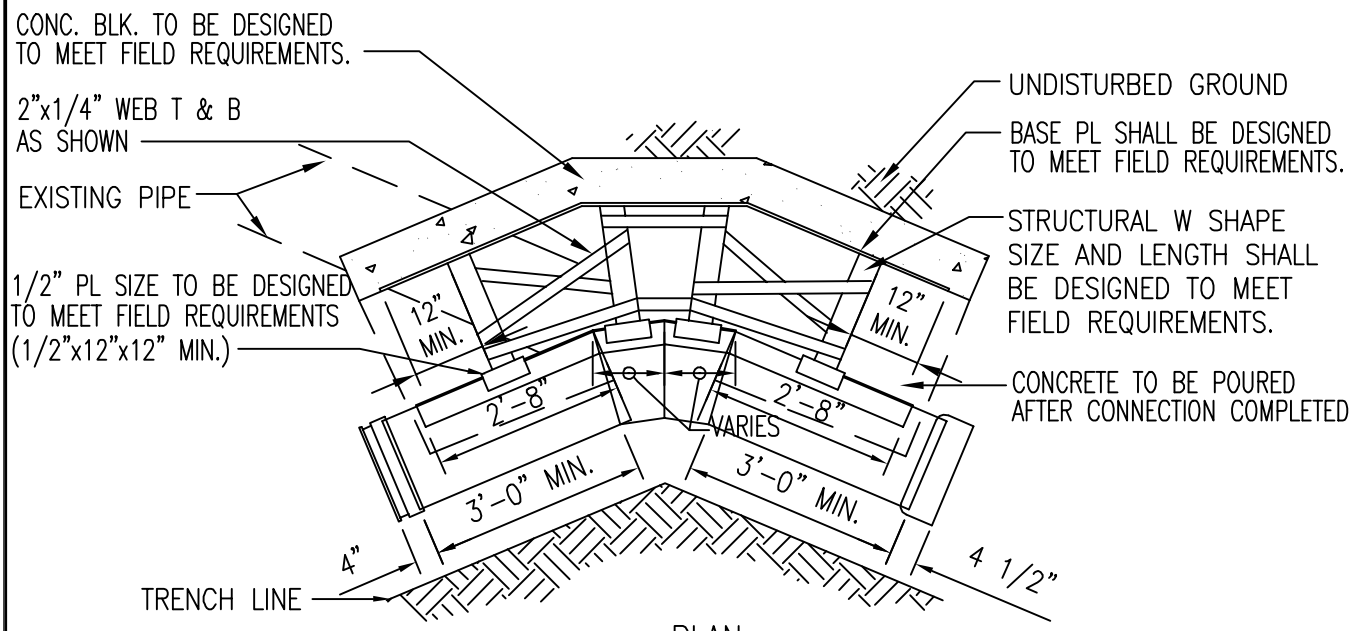

PLAN

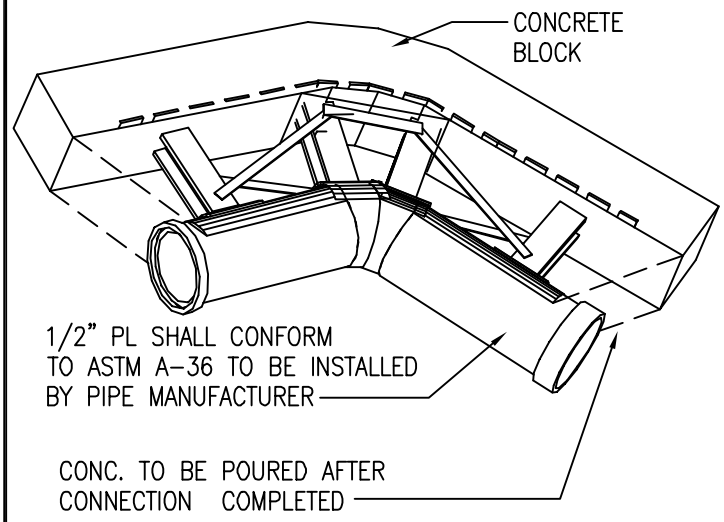

ISOMETRIC

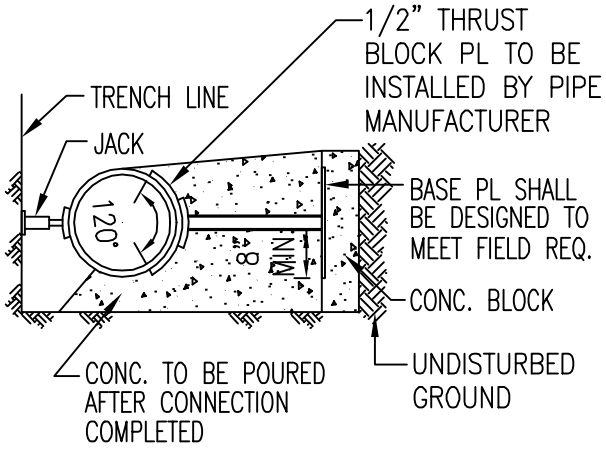

SECTION

NOTES:
1. ALL WELDS SHALL CONFORM TO AWS STANDARDS.
2. PL SHALL BE UNCOATED READY TO RECEIVE THRUST STRUTS AND APPURTENANCES.
3. DELIVER AT REQUEST.
4. NUMBER OF STRUTS TO BE USED MAY VARY ACCORDING TO THE WORKING PRESSURE.

			2002
			REVISION
KAUAI OAHU MAUI	TYPICAL THRUST BLOCK 45° TO 67 1/2° CONCRETE CYLINDER BEND FOR 16" TO 42" CONNECTIONS ONLY SCALE: NTS	STANDARD DETAILS	B12

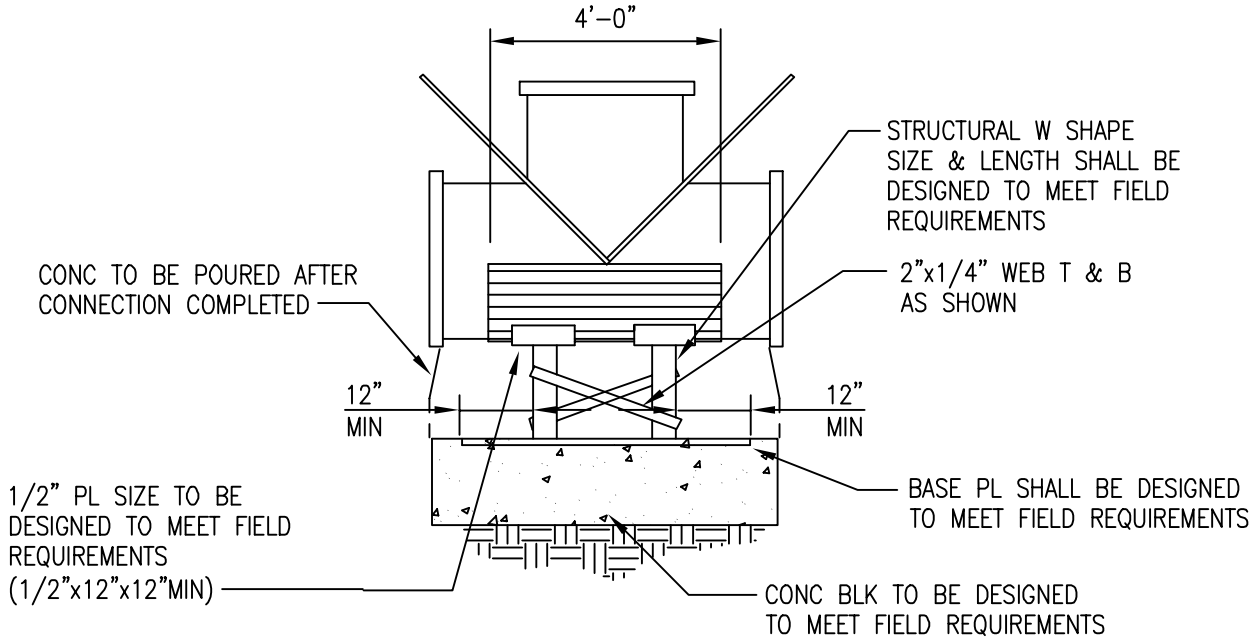

PLAN

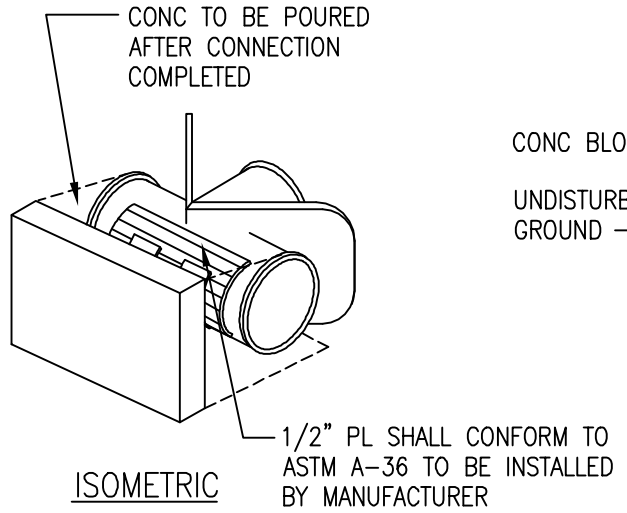

ISOMETRIC

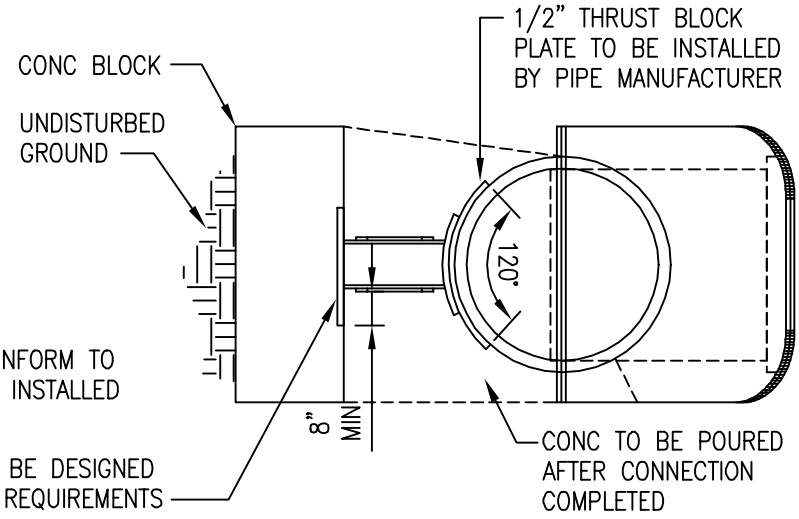

SECTION

NOTES:

1. ALL WELDS SHALL CONFORM TO AWS STANDARDS.
2. PL SHALL BE UNCOATED READY TO RECEIVE THRUST STRUTS AND APPURTENANCES.
3. DELIVER AT REQUEST.
4. NUMBER OF STRUTS TO BE USED MAY VARY ACCORDING TO THE WORKING PRESSURE.

			2002
			REVISION
KAUAI OAHU MAUI	TYPICAL THRUST BLOCK CONCRETE CYLINDER TEE CONNECTION (16" - 42") SCALE: NTS	STANDARD DETAILS	B13

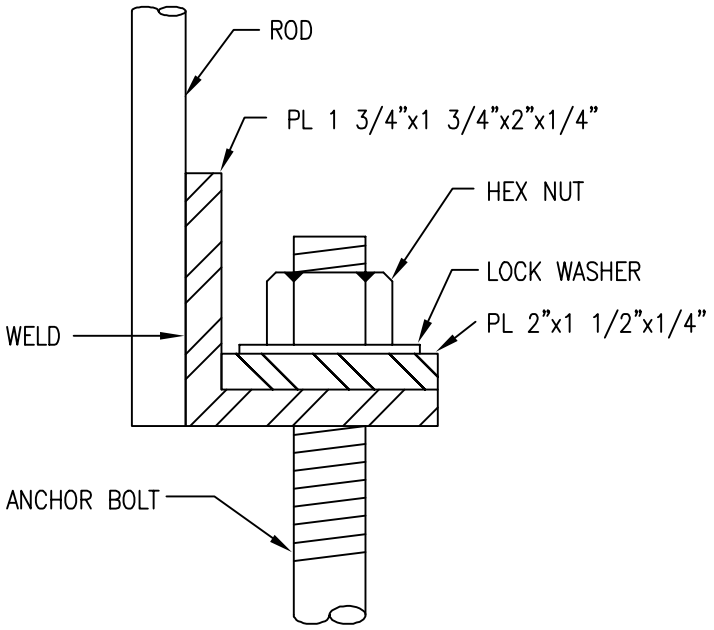

DETAIL "A"

NOTES:

1. APPLY BOND BREAKER BETWEEN GATE VALVE AND CONCRETE.
2. ALL ANCHOR MATERIALS SHALL BE HOT DIPPED GALVANIZED STEEL, AND COATED WITH ASPHALTIC MATERIAL AFTER INSTALLATION.
3. 3" CLEARANCE FOR ALL REINFORCING STEEL.
4. FOR MANHOLES, ANCHOR BLOCKS CAN BE MADE AS PART OF FLOOR SLAB. SUBMIT STRUCTURAL DESIGN FOR MANAGER'S APPROVAL.
5. (ADDITIONAL FOR MAUI) A SEGMENT OF AC PIPE SHALL BE REMOVED AND THE VALVE INSTALLED WITH D.I.P. NIPPLES.
6. ANCHOR BLOCK DESIGNED FOR VERTICAL LOAD ONLY. FOR BLOCK SCHEDULE, SEE DETAIL B15.
7. STANDPIPE SHALL BE PVC C-900.

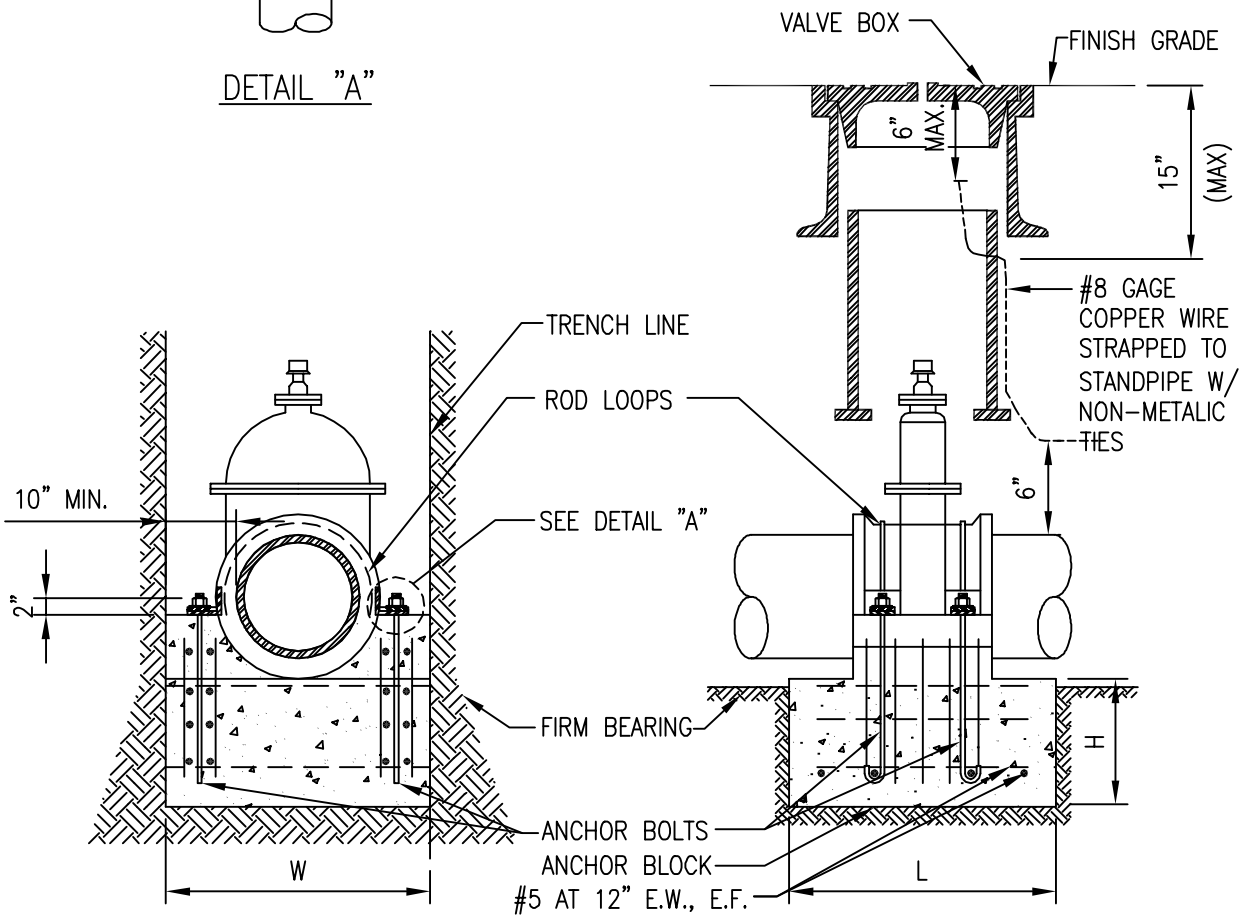

TYPICAL DETAIL

2002	
REVISION	

OAHU MAUI	GATE VALVE ANCHOR BLOCK NON-METALIC PIPES SCALE: NTS	STANDARD DETAILS	B14

TYPE OF SOIL CONDITION			A	B	C	D	E	F	G
PIPE SIZE (in)	WIDTH, W (in)	HEIGHT, H (in)	LENGTH OF ANCHOR BLOCK, L (in)						
4	24	12	24	24	24	24	24	24	24
6	26	12	26	26	26	26	26	26	26
8	28	15	28	28	28	28	28	28	28
12	32	15	32	32	32	32	32	32	32
16	36	18	36	36	36	36	36	36	36
18	38	18	38	38	38	38	38	38	38
20	40	18	40	40	40	40	40	40	40
24	44	18	44	44	44	44	44	44	44
30	50	18	50	50	50	50	50	50	50

TYPE OF SOIL CONDITION — LATERAL BEARING PRESSURE

A. SOFT CLAY: FINE LOOSE SAND.....500 LBS. PER SQ. FT.
B. SAND AND CLAY; MIXED OR IN LAYERS; FINE CONFINED SAND.....1000 LBS. PER SQ FT.
C. HARD DRY CLAY.....1500 LBS. PER SQ. FT.
D. COARSE SAND.....2000 LBS. PER SQ FT.
E. GRAVEL.....3000 LBS. PER SQ. FT.
F. SOFT ROCK.....4000 LBS. PER SQ FT.
G. HARDPAN.....5000 LBS. PER SQ. FT.

NOTE:

1. ACTUAL FIELD CONDITIONS AND SOIL TYPE SHALL BE VERIFIED IN THE FIELD. THE SCHEDULE, DIMENSIONS AND DETAILS AS SHOWN ARE PROVIDED AS A GUIDE ONLY. THE CONTRACTOR OR ENGINEER WHO PREPARED THE PLANS SHALL SUBMIT THE FINAL DESIGN AND DETAILS TO THE MANAGER FOR REVIEW AND APPROVAL AFTER FIELD VERIFICATION AND PRIOR TO INSTALLATION. FOR OAHU ONLY, THE DEPARTMENT WILL FURNISH THE FINAL DESIGN AND DETAILS FOR PROJECTS AWARDED BY THE MANAGER.

2. ENGINEER SHALL EVALUATE SOIL CONDITIONS AND VERIFY THAT THE ALLOWABLE PRESSURE PROVIDED IS APPLICABLE

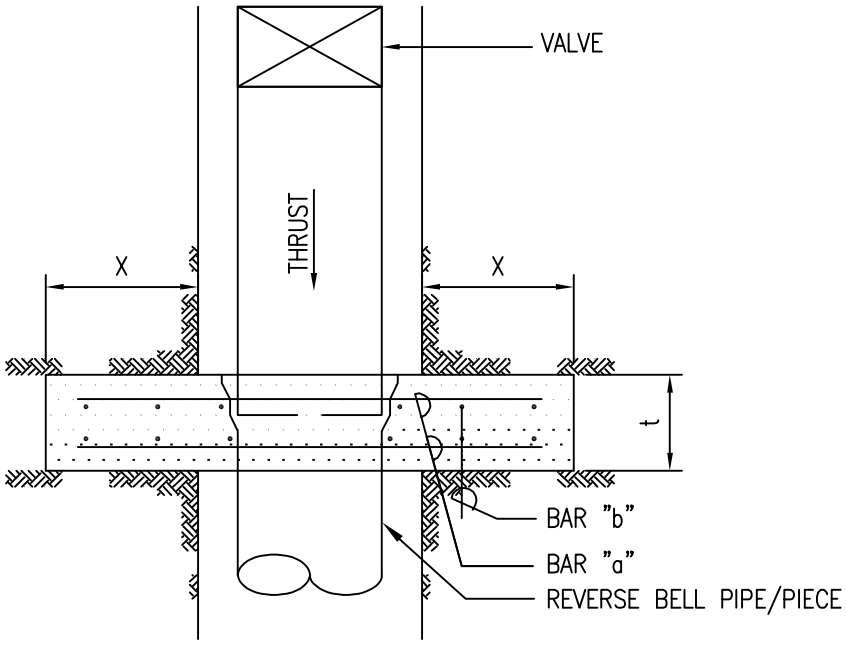

PLAN

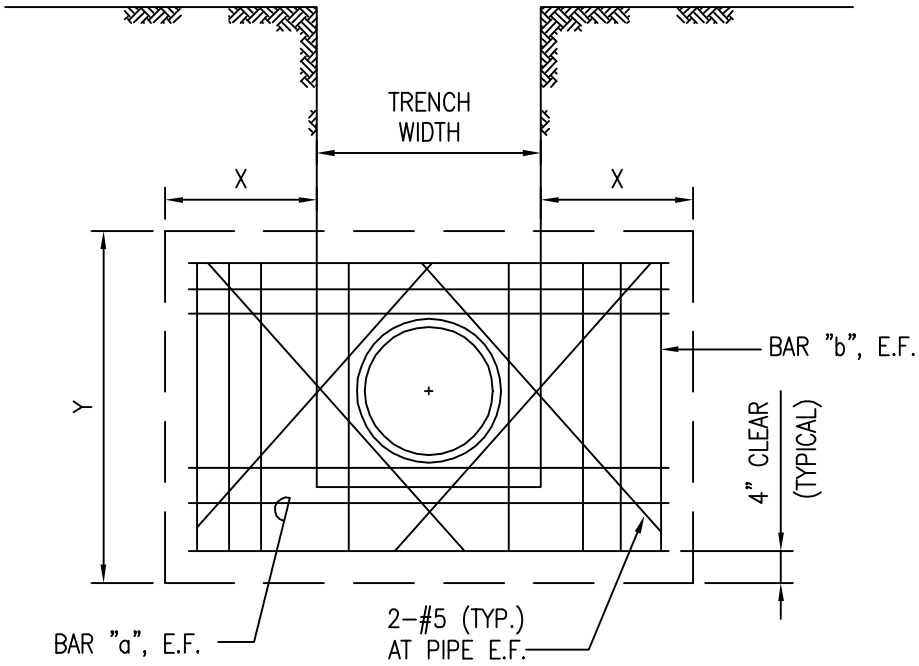

ELEVATION

SEE TABLE ON PLATES B17 AND B18 FOR DIMENSION. FOR TRENCH WIDTH REFER TO TABLE 300-1 IN DIVISION 300 OF THE WATER SYSTEM STANDARDS.

FOR MAUI: SEE TABLE ON PLATES B20 AND B21 WHEN BEAM IS REQUIRED FOR RESTRAINT OF A REDUCER.

			2002
			REVISION
KAUAI OAHU MAUI HAWAII	**CONCRETE THRUST BEAM** TYPICAL DETAIL SCALE: NTS	STANDARD DETAILS	B16

KAUAI
OAHU
MAUI
HAWAII

CONCRETE THRUST BEAM

SCHEDULE

SCALE: NTS

STANDARD DETAILS

B17

WATER PRESSURE 250 PSI
TYPE OF SOIL CONDITION

PIPE	A		B		C		D		E		F		G			Bar "a"	Bar "b"
SIZE (in)	Y (ft)	X (ft)	Y (ft)	X (ft)	Y (ft)	X (ft)	Y (ft)	X (ft)	Y (ft)	X (ft)	Y (ft)	X (ft)	Y (ft)	X (ft)	t (in)	Min.	Min.
4	2.75	3.50	2.75	3.50	2.75	3.50	2.75	3.50	2.75	3.50	2.75	3.50	2.75	3.50	12.00	#4@12"	#4@12"
6	3.00	4.00	3.00	3.75	3.00	3.75	3.00	3.75	3.00	3.75	3.00	4.00	3.00	4.00	12.00	#4@12"	#4@12"
8	3.50	4.75	3.25	4.25	3.25	4.25	3.25	4.25	3.25	4.25	3.25	4.25	3.25	4.25	12.00	#4@6"	#4@12"
12	5.00	6.50	3.50	4.50	3.50	4.50	3.50	4.50	3.50	4.50	3.50	4.50	3.50	4.50	18.00	#4@6"	#5@12"
16	6.75	8.75	4.75	6.00	4.00	5.25	3.75	4.75	3.75	4.75	3.75	5.00	3.75	4.75	18.00	#5@6"	#5@12"
18	7.50	9.75	5.25	6.75	4.50	5.75	4.00	5.25	4.00	5.25	4.00	5.25	4.25	5.50	18.00	#6@6"	#5@12"
20	8.25	10.75	5.75	7.25	4.75	6.00	4.25	5.50	4.25	5.50	4.50	5.75	4.50	5.75	24.00	#6@6"	#6@12"
24	10.00	12.75	6.75	8.50	5.75	7.25	5.00	6.25	4.50	5.75	4.75	6.00	4.75	6.00	24.00	#6@6"	#6@12"
30	12.25	15.75	8.75	11.00	7.25	9.25	6.25	8.00	6.00	7.50	6.00	7.50	6.00	7.50	24.00	#8@6"	#6@12"
36	14.75	18.75	10.50	13.25	8.50	10.75	7.50	9.50	7.00	9.00	7.00	9.00	7.00	9.00	30.00	#9@6"	#6@8"
42	17.00	21.75	12.00	15.25	10.00	12.75	8.75	11.25	7.75	9.75	7.75	9.75	7.75	9.75	36.00	#10@6"	#6@6"

WATER PRESSURE 200 PSI
TYPE OF SOIL CONDITION

PIPE	A		B		C		D		E		F		G			Bar "a"	Bar "b"
SIZE (in)	Y (ft)	X (ft)	Y (ft)	X (ft)	Y (ft)	X (ft)	Y (ft)	X (ft)	Y (ft)	X (ft)	Y (ft)	X (ft)	Y (ft)	X (ft)	t (in)	Min.	Min.
4	2.75	3.50	2.75	3.50	2.75	3.50	2.75	3.50	2.75	3.50	2.75	3.50	2.75	3.50	12.00	#4@12"	#4@10"
6	3.00	4.00	3.00	3.75	3.00	3.75	3.00	3.75	3.00	3.75	3.00	3.75	3.00	3.75	12.00	#4@12"	#4@10"
8	3.25	4.25	3.25	4.25	3.25	4.25	3.25	4.25	3.25	4.25	3.25	4.25	3.25	4.25	12.00	#4@12"	#4@10"
12	4.50	5.75	3.50	4.50	3.50	4.50	3.50	4.50	3.50	4.50	3.50	4.50	3.50	4.50	18.00	#4@12"	#5@10"
16	6.00	7.75	4.50	5.75	3.75	4.75	3.75	4.75	3.75	4.75	3.75	4.75	3.75	4.75	18.00	#4@6"	#5@10"
18	6.75	8.75	5.00	6.50	4.00	5.25	4.00	5.25	4.25	5.50	4.00	5.25	4.25	5.50	18.00	#5@6"	#5@10"
20	7.50	9.75	5.25	6.75	4.25	5.50	4.25	5.50	4.50	5.75	4.50	5.75	4.50	5.75	24.00	#5@6"	#6@10"
24	8.75	11.50	6.25	8.00	5.25	6.75	4.50	5.75	4.75	6.00	4.75	6.00	4.75	6.00	24.00	#6@6"	#6@10"
30	11.00	14.25	7.75	10.00	6.50	8.50	5.75	7.50	5.25	6.75	5.25	6.75	5.25	6.75	24.00	#7@6"	#6@10"
36	13.25	17.00	9.50	12.00	7.75	10.00	6.75	8.75	6.00	7.50	6.00	7.50	6.00	7.50	30.00	#8@6"	#6@8"
42	15.50	19.50	11.00	14.25	9.00	11.25	8.00	10.25	7.00	8.75	7.00	8.75	7.00	8.75	36.00	#9@6"	#6@6"

NOTE:

REFER TO DETAIL B18 FOR ADDITIONAL INFORMATION

REVISION 2002

KAUAI
OAHU
MAUI
HAWAII

CONCRETE THRUST BEAM

SCHEDULE

SCALE: NTS

STANDARD DETAILS

B18

REVISION 2002

WATER PRESSURE 150 PSI
TYPE OF SOIL CONDITION

PIPE	A		B		C		D		E		F		G			Bar "a"	Bar "b"
SIZE (in)	Y (ft)	X (ft)	Y (ft)	X (ft)	Y (ft)	X (ft)	Y (ft)	X (ft)	Y (ft)	X (ft)	Y (ft)	X (ft)	Y (ft)	X (ft)	t (in)	Min.	Min.
4	2.75	3.25	2.75	3.50	2.75	3.50	2.75	3.50	2.75	3.50	2.75	3.50	2.75	3.50	12.00	#4@12"	#4@10"
6	3.00	3.25	3.00	3.75	3.00	3.75	3.00	3.75	3.00	3.75	3.00	3.75	3.00	3.75	12.00	#4@12"	#4@10"
8	3.50	3.75	3.25	4.25	3.25	4.25	3.25	4.25	3.25	4.25	3.25	4.25	3.25	4.25	12.00	#4@12"	#4@10"
12	4.00	5.25	3.50	4.50	3.50	4.50	3.50	4.50	3.50	4.50	3.50	4.50	3.50	4.50	18.00	#4@12"	#5@10"
16	5.25	6.75	3.75	4.75	3.75	4.75	3.75	4.75	3.75	4.75	3.75	4.75	3.75	4.75	18.00	#4@6"	#5@10"
18	6.00	7.75	4.25	5.50	4.00	5.50	4.00	5.25	4.25	5.50	4.25	5.50	4.25	5.50	18.00	#5@6"	#5@10"
20	6.50	8.25	4.50	5.75	4.25	5.75	4.50	5.75	4.50	5.75	4.50	5.75	4.50	5.75	24.00	#5@6"	#6@10"
24	7.75	10.00	5.50	7.00	4.75	6.00	4.75	6.00	4.75	6.00	4.75	6.00	4.75	6.00	24.00	#5@6"	#6@10"
30	9.50	12.25	6.75	8.50	5.75	7.25	5.25	6.75	5.25	6.75	5.25	6.75	5.25	6.75	24.00	#6@6"	#6@10"
36	11.25	14.25	8.00	10.25	6.75	8.50	5.75	7.25	5.75	7.25	5.75	7.25	5.75	7.25	30.00	#7@6"	#6@8"
42	13.25	16.75	9.50	12.25	7.75	9.75	6.75	8.50	6.25	8.00	6.25	8.00	6.25	8.00	36.00	#8@6"	#6@6"

TYPE OF SOIL CONDITION	LATERAL BEARING PRESSURE
A. SOFT CLAY: FINE LOOSE SAND	500 LBS. PER SQ. FT.
B. SAND AND CLAY; MIXED OR IN LAYERS; FINE CONFINED SAND	1000 LBS. PER SQ. FT.
C. HARD DRY CLAY	1500 LBS. PER SQ. FT.
D. COARSE SAND	2000 LBS. PER SQ FT.
E. GRAVEL	3000 LBS. PER SQ. FT.
F. SOFT ROCK	4000 LBS. PER SQ FT.
G. HARDPAN	5000 LBS. PER SQ. FT.

NOTE:

1. ACTUAL FIELD CONDITIONS AND SOIL TYPE SHALL BE VERIFIED IN THE FIELD. THE SCHEDULE, DIMENSIONS AND DETAILS AS SHOWN ARE PROVIDED AS A GUIDE ONLY. THE CONTRACTOR OR ENGINEER WHO PREPARED THE PLANS SHALL SUBMIT THE FINAL DESIGN AND DETAILS TO THE MANAGER FOR REVIEW AND APPROVAL AFTER FIELD VERIFICATION AND PRIOR TO INSTALLATION. FOR OAHU ONLY, THE DEPARTMENT WILL FURNISH THE FINAL DESIGN AND DETAILS FOR PROJECTS AWARDED BY THE MANAGER.

2. ENGINEER SHALL EVALUATE SOIL CONDITIONS AND VERIFY THAT THE ALLOWABLE PRESSURE PROVIDED IS APPLICABLE

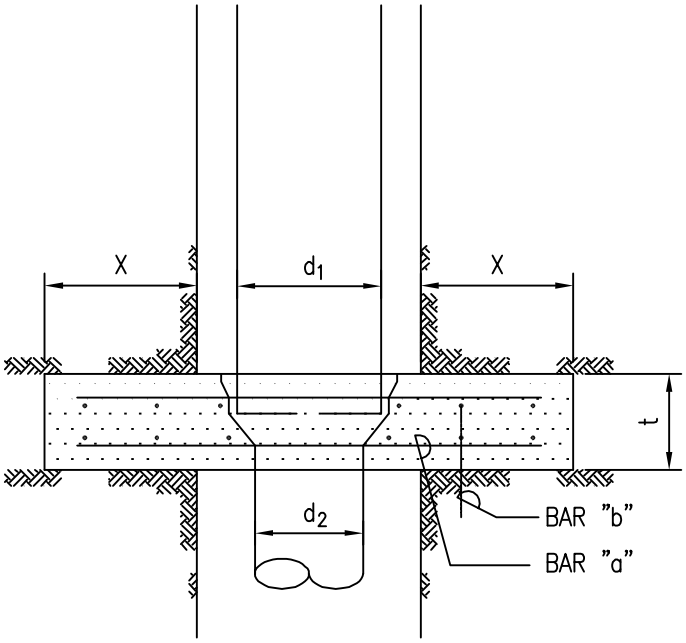

PLAN

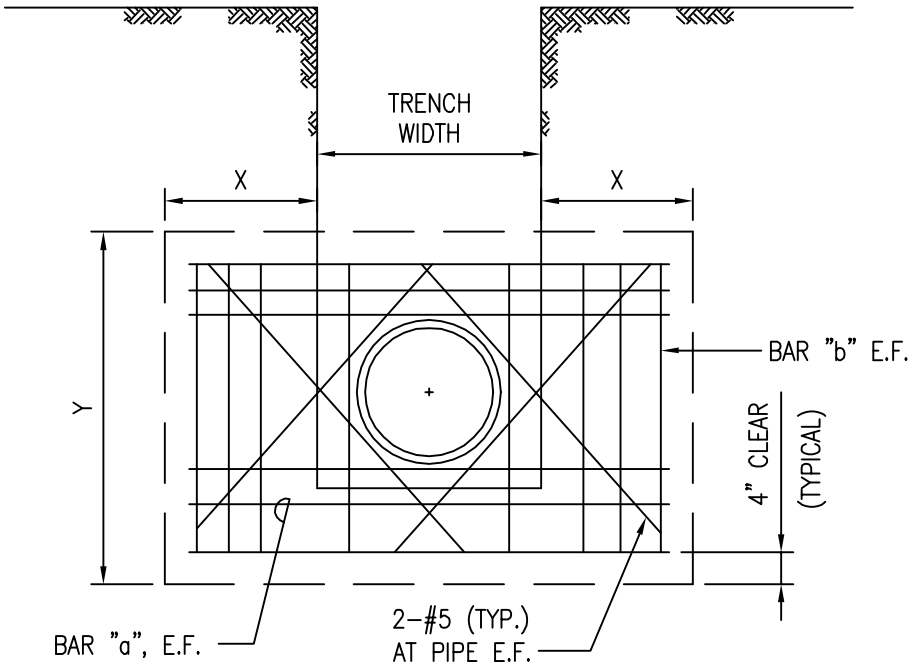

ELEVATION

SEE TABLE ON PLATES B20 AND B21 FOR DIMENSION. FOR TRENCH WIDTH REFER TO TABLE 300-1 IN DIVISION 300 OF THE WATER SYSTEM STANDARDS.

			2002
			REVISION
KAUAI OAHU HAWAII	**CONCRETE THRUST BEAM** **FOR REDUCER - TYPICAL DETAIL** SCALE: NTS	STANDARD DETAILS	B19

KAUAI
OAHU
MAUI
HAWAII

CONCRETE THRUST BEAM

REDUCER - SCHEDULE

SCALE: NTS

STANDARD DETAILS

B20

WATER PRESSURE 250 PSI
TYPE OF SOIL CONDITION

D1	D2	A		B		C		D		E		F		G			Bar "a"	Bar "b"
PIPE	PIPE	Y (ft)	X (ft)	Y (ft)	X (ft)	Y (ft)	X (ft)	Y (ft)	X (ft)	Y (ft)	X (ft)	Y (ft)	X (ft)	Y (ft)	X (ft)	t (in)	Min.	Min.
SIZE (in)	SIZE (in)																	
4	3	2.00	2.50	2.00	2.50	2.00	2.50	2.00	2.50	2.00	2.50	2.00	2.50	2.00	2.50	5.00	#4@6"	#4@12"
6	4	2.25	3.00	2.25	3.00	2.25	3.00	2.25	3.00	2.25	3.00	2.25	3.00	2.25	3.00	7.00	#4@6"	#4@12"
8	6	2.75	3.50	2.50	3.50	2.50	3.25	2.50	3.25	2.50	3.25	2.50	3.25	2.50	3.25	9.00	#4@6"	#4@12"
12	10	4.75	6.25	3.50	4.00	2.75	3.50	2.75	3.50	2.75	3.50	2.75	3.50	2.75	3.50	12.00	#4@6"	#5@12"
16	12	6.00	7.75	4.25	5.25	3.50	4.50	3.00	3.75	2.75	3.50	3.00	3.75	3.00	3.75	16.00	#5@6"	#5@12"
18	16	6.50	8.25	4.75	5.75	3.75	4.75	3.25	4.25	2.75	3.50	3.25	4.25	3.25	4.25	17.00	#5@6"	#5@8"
20	18	7.00	8.75	5.00	6.25	4.00	5.25	3.50	4.50	3.00	3.75	3.25	4.25	3.25	4.25	18.00	#5@6"	#5@8"
24	20	8.50	10.75	6.00	7.75	5.00	6.50	4.25	5.50	3.50	4.50	3.75	4.75	3.75	4.75	22.00	#6@6"	#5@8"
30	24	9.75	12.25	7.00	9.50	5.75	7.25	5.00	6.25	4.00	5.25	4.25	5.50	4.25	5.50	24.00	#7@6"	#5@8"
36	30	12.00	15.00	8.50	11.75	7.00	8.75	6.00	7.75	5.00	6.25	4.75	6.00	4.75	6.00	30.00	#8@6"	#5@6"
42	30	14.75	18.50	10.50	13.50	8.50	10.75	7.50	9.50	6.00	7.50	5.25	6.75	5.25	6.75	36.00	#9@6"	#6@6"

WATER PRESSURE 200 PSI
TYPE OF SOIL CONDITION

D1	D2	A		B		C		D		E		F		G			Bar "a"	Bar "b"
PIPE	PIPE	Y (ft)	X (ft)	Y (ft)	X (ft)	Y (ft)	X (ft)	Y (ft)	X (ft)	Y (ft)	X (ft)	Y (ft)	X (ft)	Y (ft)	X (ft)	t (in)	Min.	Min.
SIZE (in)	SIZE (in)																	
4	3	2.00	2.50	2.00	2.50	2.00	2.50	2.00	2.50	2.00	2.50	2.00	2.50	2.00	2.50	5.00	#4@12"	#4@12"
6	4	2.25	3.00	2.25	3.00	2.25	3.00	2.25	3.00	2.25	3.00	2.25	3.00	2.25	3.00	7.00	#4@12"	#4@12"
8	6	2.50	3.25	2.50	3.25	2.50	3.25	2.50	3.25	2.50	3.25	2.50	3.25	2.50	3.25	9.00	#4@12"	#4@12"
12	10	4.25	5.50	3.00	3.75	2.75	3.75	2.75	3.75	2.75	3.50	2.75	3.50	2.75	3.50	12.00	#4@6"	#5@12"
16	12	5.25	6.75	3.75	4.75	3.25	4.25	3.00	4.00	3.00	3.75	3.00	3.75	3.00	3.75	16.00	#4@6"	#5@12"
18	16	5.75	7.25	4.25	5.50	3.50	4.50	3.25	4.25	3.25	4.25	3.25	4.25	3.25	4.25	17.00	#5@6"	#5@8"
20	18	6.25	8.00	4.50	5.75	3.75	4.75	3.50	4.50	3.50	4.50	3.50	4.50	3.50	4.50	18.00	#5@6"	#5@8"
24	20	7.50	9.50	5.25	6.75	4.25	5.50	3.75	4.75	3.75	4.75	3.75	4.75	3.75	4.75	22.00	#5@6"	#5@8"
30	24	8.50	10.75	6.00	7.75	5.00	6.25	4.50	5.75	4.25	5.75	4.25	5.75	4.25	5.75	24.00	#6@6"	#5@8"
36	30	10.75	13.50	7.75	9.75	6.25	8.00	5.50	7.00	4.75	6.00	4.75	6.00	4.75	6.00	30.00	#7@6"	#5@6"
42	30	13.25	16.75	9.25	11.75	7.75	9.75	6.75	8.50	5.50	7.00	5.25	7.00	5.25	7.00	36.00	#8@6"	#6@6"

NOTE:

REFER TO PLATE B21 FOR ADDITIONAL INFORMATION

REVISION 2002

KAUAI
OAHU
MAUI
HAWAII

CONCRETE THRUST BEAM

FOR REDUCER - SCHEDULE

SCALE: NTS

STANDARD DETAILS

B21

REVISION 2002

WATER PRESSURE 150 PSI
TYPE OF SOIL CONDITION

D1	D2	A		B		C		D		E		F		G			Bar "a"	Bar "b"
PIPE	PIPE	Y (ft)	X (ft)	Y (ft)	X (ft)	Y (ft)	X (ft)	Y (ft)	X (ft)	Y (ft)	X (ft)	Y (ft)	X (ft)	Y (ft)	X (ft)	t (in)	Min.	Min.
SIZE (in)	SIZE (in)																	
4	3	2.00	2.50	2.00	2.75	2.00	2.75	2.00	2.75	2.00	2.75	2.00	2.75	2.00	2.75	5.00	#4@12"	#4@12"
6	4	2.25	3.00	2.25	3.00	2.25	3.00	2.25	3.00	2.25	3.00	2.25	3.00	2.25	3.00	7.00	#4@12"	#4@12"
8	6	2.50	3.25	2.50	3.25	2.50	3.25	2.50	3.25	2.50	3.25	2.50	3.25	2.50	3.25	9.00	#4@12"	#4@12"
12	10	3.50	4.75	2.75	3.25	2.75	3.50	2.75	3.50	2.75	3.50	2.75	3.50	2.75	3.50	12.00	#4@12"	#5@12"
16	12	4.75	6.00	3.25	4.25	3.25	4.25	3.25	4.25	3.25	4.25	3.25	4.25	3.25	4.25	16.00	#4@6"	#5@12"
18	16	5.00	6.25	3.50	4.50	3.50	4.50	3.25	4.25	3.25	4.25	3.25	4.25	3.25	4.25	17.00	#4@6"	#5@8"
20	18	5.50	7.00	3.75	4.75	3.50	4.50	3.50	4.50	3.50	4.50	3.50	4.50	3.50	4.50	18.00	#4@6"	#5@8"
24	20	6.50	8.25	4.50	5.75	3.75	4.75	3.75	4.75	3.75	4.75	3.75	4.75	3.75	4.75	22.00	#5@6"	#5@8"
30	24	7.50	9.50	5.25	6.75	4.50	5.75	4.25	5.75	4.25	5.75	4.25	5.75	4.25	5.75	24.00	#5@6"	#5@8"
36	30	9.25	11.75	6.50	8.25	5.50	7.00	4.75	6.00	4.75	6.00	4.75	6.00	4.75	6.00	30.00	#6@6"	#5@6"
42	30	11.50	14.25	8.00	10.25	6.75	8.50	5.25	6.75	5.25	6.75	5.25	6.75	5.25	6.75	36.00	#7@6"	#6@6"

TYPE OF SOIL CONDITION	LATERAL BEARING PRESSURE
A. SOFT CLAY: FINE LOOSE SAND	500 LBS. PER SQ. FT.
B. SAND AND CLAY; MIXED OR IN LAYERS; FINE CONFINED SAND	1000 LBS. PER SQ. FT.
C. HARD DRY CLAY	1500 LBS. PER SQ. FT.
D. COARSE SAND	2000 LBS. PER SQ FT.
E. GRAVEL	3000 LBS. PER SQ. FT.
F. SOFT ROCK	4000 LBS. PER SQ FT.
G. HARDPAN	5000 LBS. PER SQ. FT.

NOTE:

1. ACTUAL FIELD CONDITIONS AND SOIL TYPE SHALL BE VERIFIED IN THE FIELD. THE SCHEDULE, DIMENSIONS AND DETAILS AS SHOWN ARE PROVIDED AS A GUIDE ONLY. THE CONTRACTOR OR ENGINEER WHO PREPARED THE PLANS SHALL SUBMIT THE FINAL DESIGN AND DETAILS TO THE MANAGER FOR REVIEW AND APPROVAL AFTER FIELD VERIFICATION AND PRIOR TO INSTALLATION. FOR OAHU ONLY, THE DEPARTMENT WILL FURNISH THE FINAL DESIGN AND DETAILS FOR PROJECTS AWARDED BY THE MANAGER.

2. ENGINEER SHALL EVALUATE SOIL CONDITIONS AND VERIFY THAT THE ALLOWABLE PRESSURE PROVIDED IS APPLICABLE BEFORE USING TABLES ABOVE

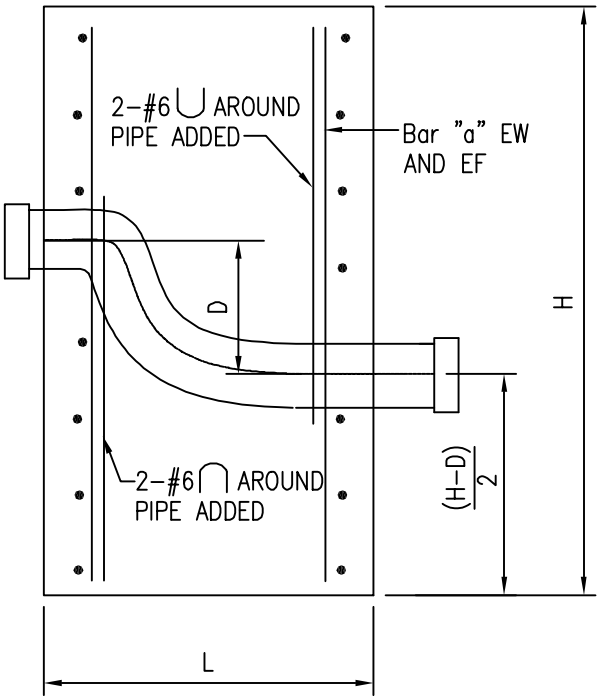

SECTION

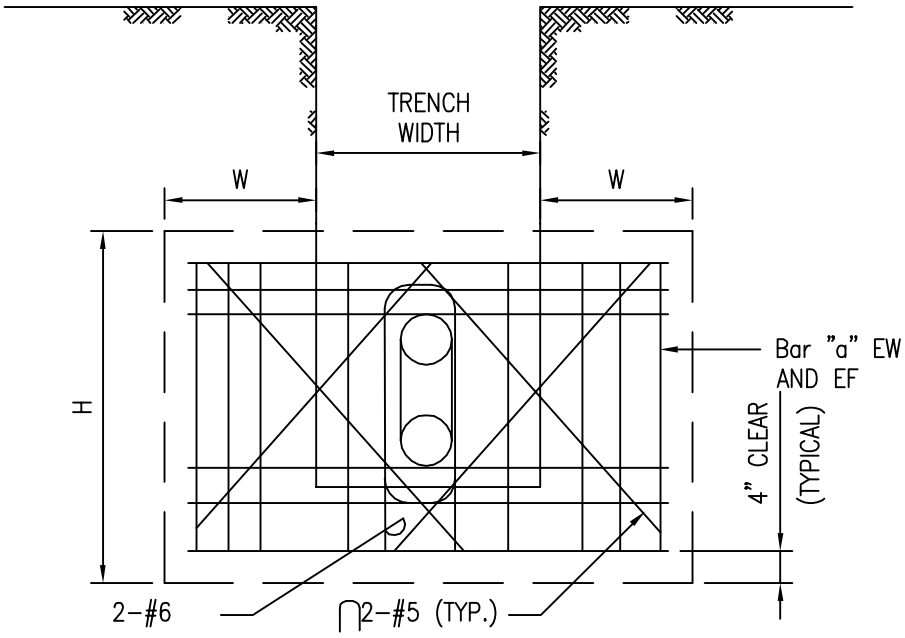

ELEVATION

SEE PLATE B23 FOR TABLE. FOR TRENCH WIDTH REFER TO TABLE 300-1 IN WATER DIVISION 300 OF THE SYSTEM STANDARDS.

			2002
			REVISION
KAUAI OAHU MAUI HAWAII	**CONCRETE THRUST BEAM** **FOR OFFSET - TYPICAL DETAIL** SCALE: NTS	STANDARD DETAILS	B22

TYPE OF SOIL CONDITION					A	B	C	D	E	F	Bar "a" Min.
SIZE (in)	D (in)	PRESSURE (psi)	L (in)	H (ft)	W (ft)	W (ft)	W (ft)	W (ft)	W (ft)	W (ft)	
3	6	250	15	3.25	1.50	1.50	1.50	1.50	1.50	1.50	#4@6"
3	12	250	18	3.25	1.50	1.50	1.50	1.50	1.50	1.50	#4@6"
3	18	250	27	3.75	1.50	1.50	1.50	1.50	1.50	1.50	#5@6"
4	6	250	15	3.25	1.50	1.50	1.50	1.50	1.50	1.50	#4@6"
4	12	250	18	3.25	1.50	1.50	1.50	1.50	1.50	1.50	#4@6"
4	18	250	27	3.75	2.00	1.50	1.50	1.50	1.50	1.50	#5@6"
6	6	250	18	3.25	1.75	1.50	1.50	1.50	1.50	1.50	#4@6"
6	12	250	21	3.50	2.25	1.50	1.50	1.50	1.50	1.50	#4@6"
6	18	250	30	4.00	2.50	2.00	1.50	1.50	1.50	1.50	#5@6"
8	6	250	18	3.50	2.00	1.50	1.50	1.50	1.50	1.50	#4@6"
8	12	250	24	3.75	4.00	2.00	1.50	1.50	1.50	1.50	#5@6"
8	18	250	30	4.25	4.00	2.00	2.00	1.50	1.50	1.50	#5@6"
12	6	250	21	3.75	3.75	2.00	1.50	1.50	1.50	1.50	#4@6"
12	12	250	33	4.75	4.75	2.50	1.75	2.00	1.50	1.50	#6@8"
12	18	250	45	5.25	5.75	5.00	2.00	3.00	2.00	1.50	#7@8"
16	6	150	24	4.25	3.75	2.00	1.50	1.50	1.50	1.50	#5@8"
16	6	250	24	4.50	4.75	3.00	2.00	1.50	1.50	1.50	#5@8"
16	12	150	36	5.00	5.00	3.75	2.50	2.00	1.50	1.50	#6@6"
16	12	250	36	5.25	7.00	4.75	4.00	3.00	2.00	1.50	#6@6"
16	18	150	45	5.50	5.75	3.75	3.75	2.75	2.00	1.50	#7@8"
16	18	250	45	6.25	7.25	5.75	4.75	4.50	3.00	2.00	#7@8"

NOTE:

FOR 12-INCH AND SMALLER OFFSETS WITH TEST PRESSURE OF 150 OR 200 PSI, USE SCHEDULE FOR 250 PSI TEST PRESSURE.

TYPE OF SOIL CONDITION	LATERAL BEARING PRESSURE
A. SOFT CLAY: FINE LOOSE SAND	500 LBS. PER SQ. FT.
B. SAND AND CLAY; MIXED OR IN LAYERS; FINE CONFINED SAND	1000 LBS. PER SQ. FT.
C. HARD DRY CLAY	1500 LBS. PER SQ. FT.
D. COARSE SAND	2000 LBS. PER SQ FT.
E. GRAVEL	3000 LBS. PER SQ. FT.
F. SOFT ROCK	4000 LBS. PER SQ FT.
G. HARDPAN	5000 LBS. PER SQ. FT.

NOTE:

1. ACTUAL FIELD CONDITIONS AND SOIL TYPE SHALL BE VERIFIED IN THE FIELD. THE SCHEDULE, DIMENSIONS AND DETAILS AS SHOWN ARE PROVIDED AS A GUIDE ONLY. THE CONTRACTOR OR ENGINEER WHO PREPARED THE PLANS SHALL SUBMIT THE FINAL DESIGN AND DETAILS TO THE MANAGER FOR REVIEW AND APPROVAL AFTER FIELD VERIFICATION AND PRIOR TO INSTALLATION. FOR OAHU ONLY, THE DEPARTMENT WILL FURNISH THE FINAL DESIGN AND DETAILS FOR PROJECTS AWARDED BY THE MANAGER.

2. ENGINEER SHALL EVALUATE SOIL CONDITIONS AND VERIFY THAT THE ALLOWABLE PRESSURE PROVIDED IS APPLICABLE.

OAHU
MAUI
HAWAII
KAUAI

CHAIN LINK FENCE

SCALE: NTS

STANDARD DETAILS

F1

2002 REVISION

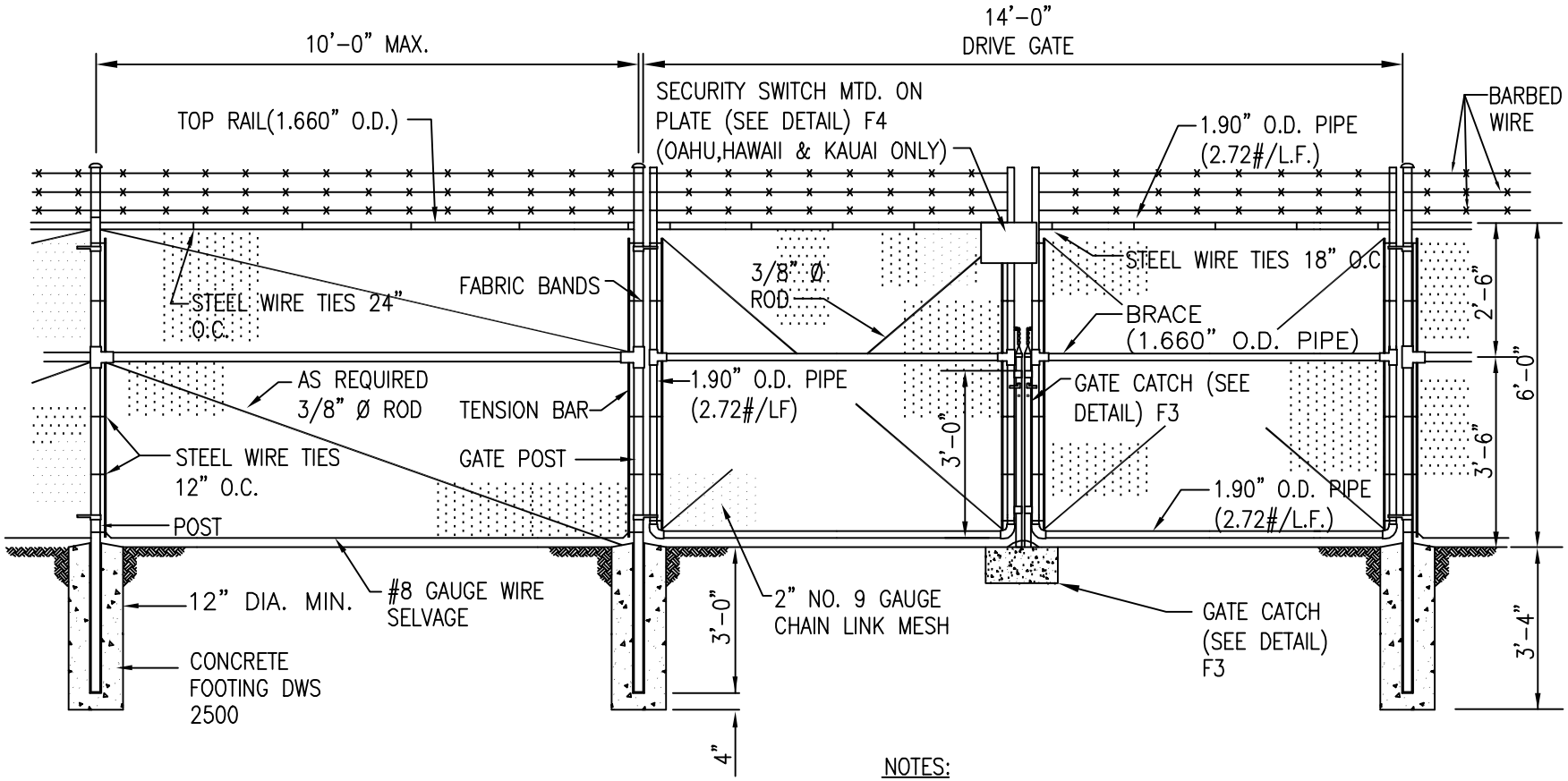

DRIVE GATE DETAIL

N.T.S.

NOTES:

1. FOR SIZES OF POSTS & RAILS, SEE TABLE 300-14 OF WATER SYSTEM STANDARDS.
2. DEPARTMENT SHALL FURNISH PADLOCKS.
3. ALL MATERIALS SHALL BE HOT-DIPPED GALVANIZED UNLESS SPECIFIED OTHERWISE.
4. CONTRACTOR TO FURNISH PADLOCKS (KAUAI ONLY)

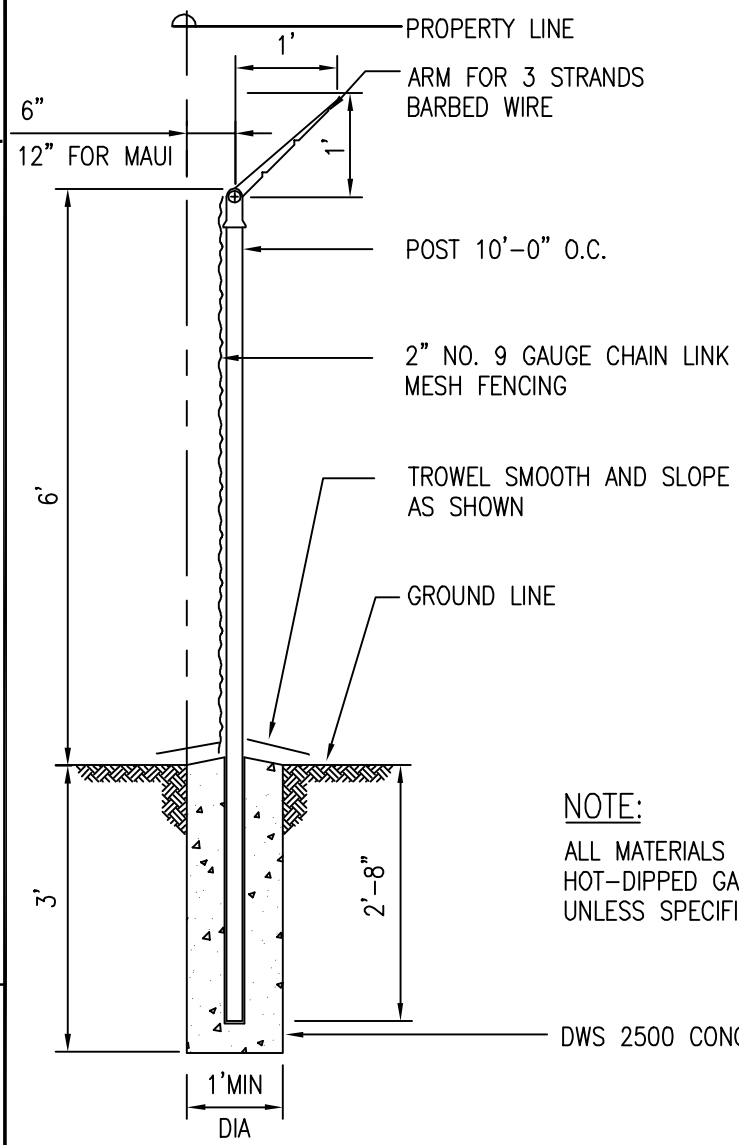

CHAIN LINK FENCE POST

NOTE:

ALL MATERIALS SHALL BE HOT-DIPPED GALVANIZED UNLESS SPECIFIED OTHERWISE.

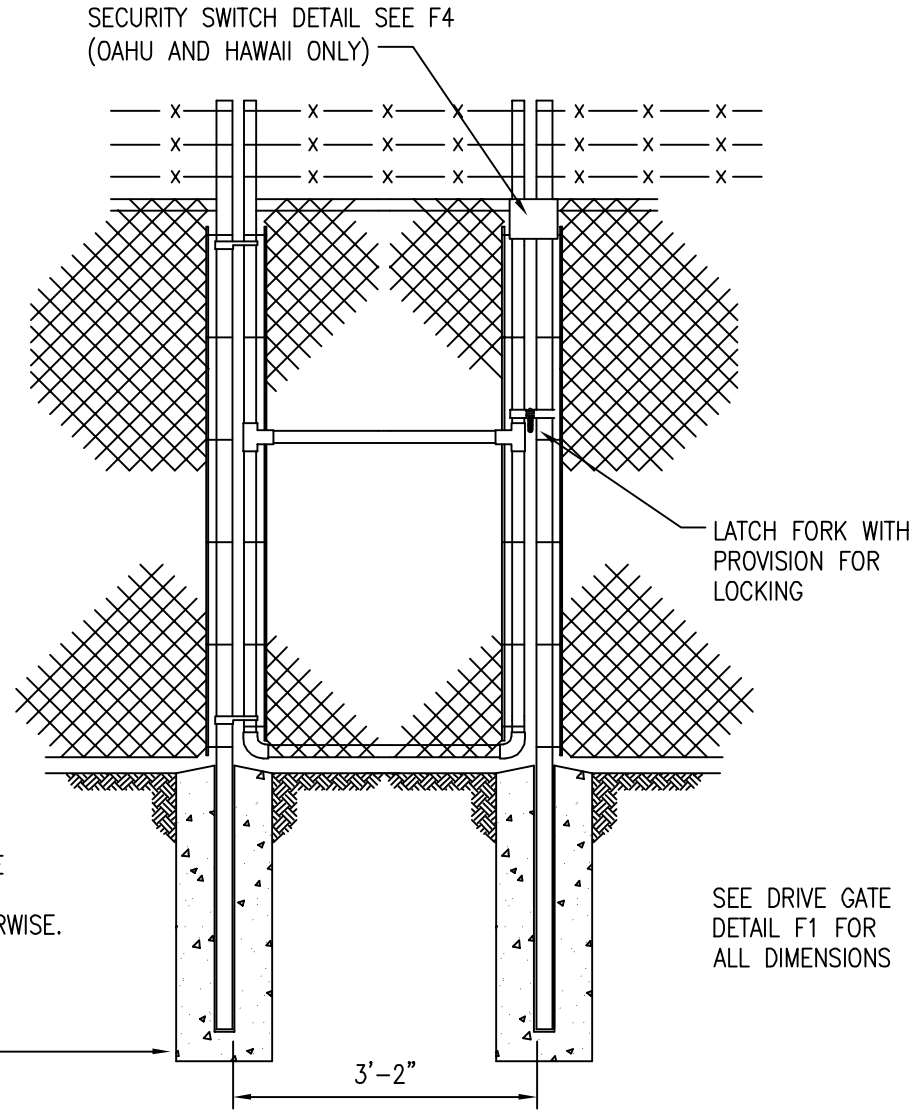

30" CHAIN LINK PEDESTRIAN GATE

OAHU
MAUI
HAWAII
KAUAI

CHAIN LINK FENCE POST AND PEDESTRIAN GATE

SCALE: NTS

STANDARD DETAILS

F2

2002 REVISION

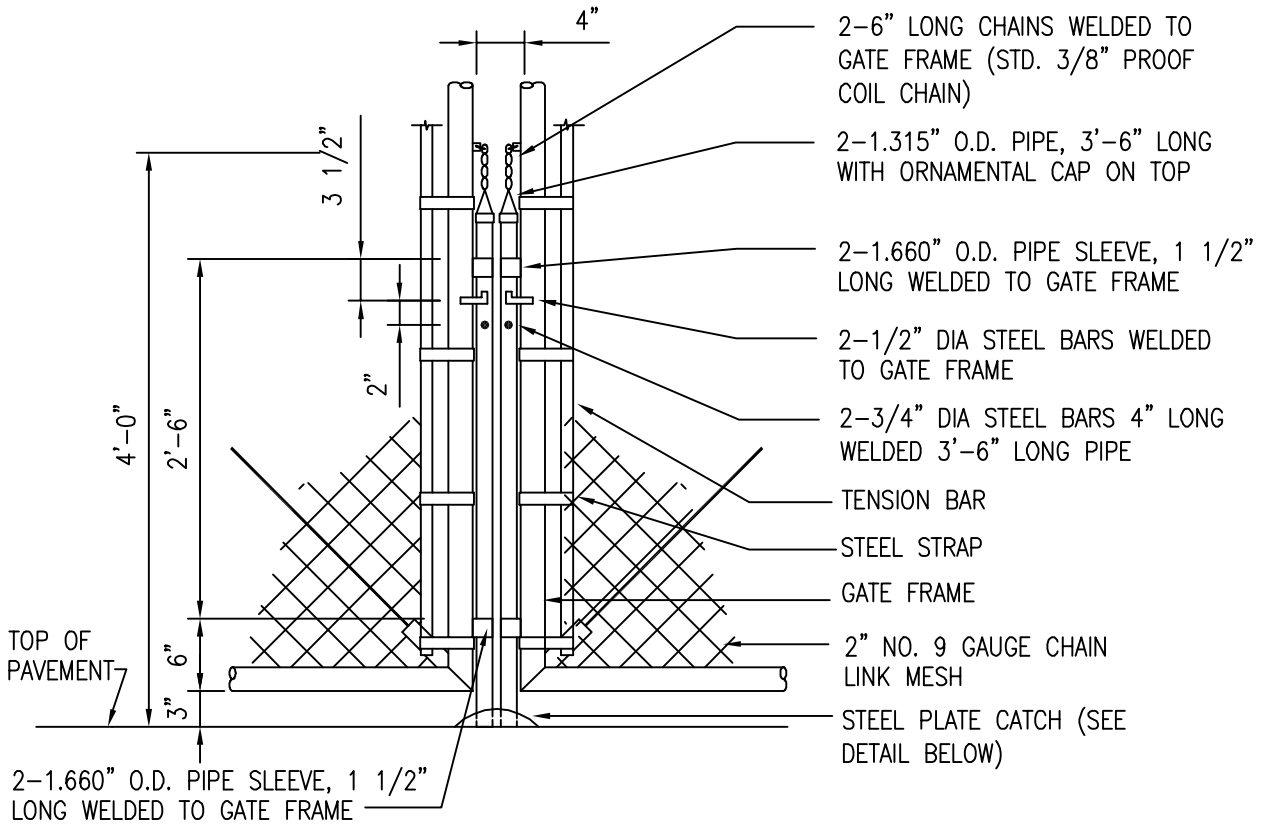

DETAIL AT CATCH GATE

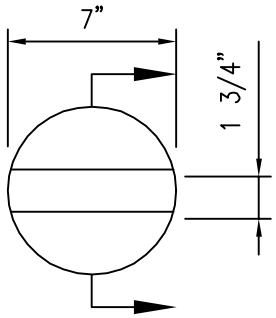

PLAN

NOTES:

1 PROVIDE 2 GATE STOPS, SIMILAR IN CONSTRUCTION AS GATE CATCH FOR DRIVE GATES WHEN FULLY OPEN.

2 ALL MATERIALS SHALL BE HOT-DIPPED GALVANIZED UNLESS SPECIFIED OTHERWISE.

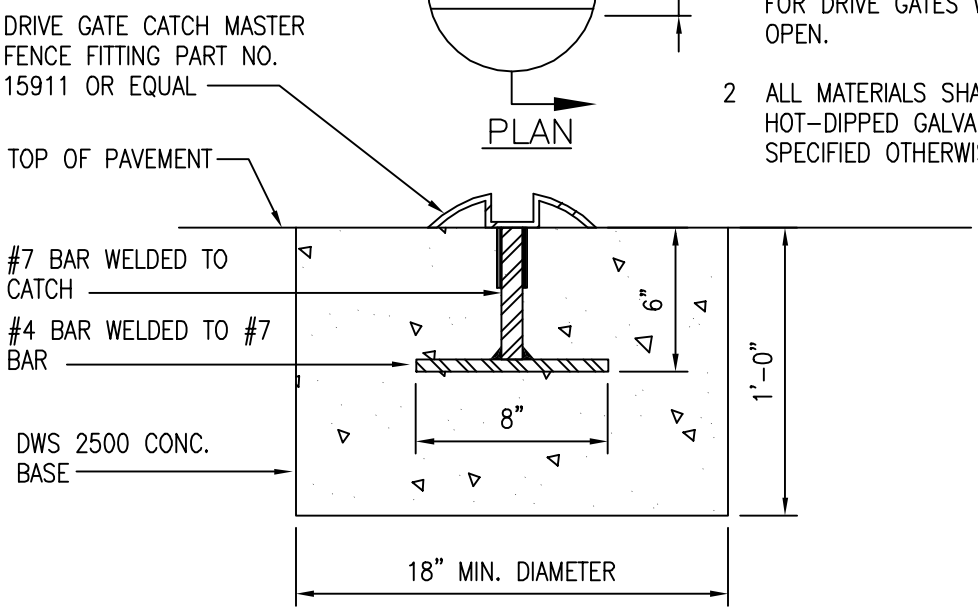

SECTION

			2002
			REVISION
OAHU MAUI HAWAII KAUAI	**CHAIN LINK FENCE** **MISCELLANEOUS DETAILS** SCALE: NTS	STANDARD DETAILS	F3

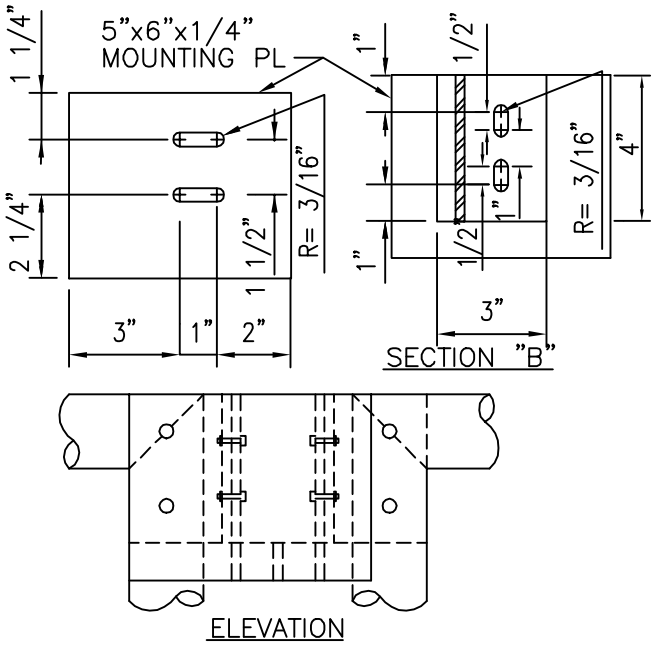

A / F4 SECURITY SWITCH DETAIL FOR INSWINGING DOUBLE LEAF CHAIN LINK FENCE

(OPPOSITE HAND FOR OUTSWINGING)

N.T.S.

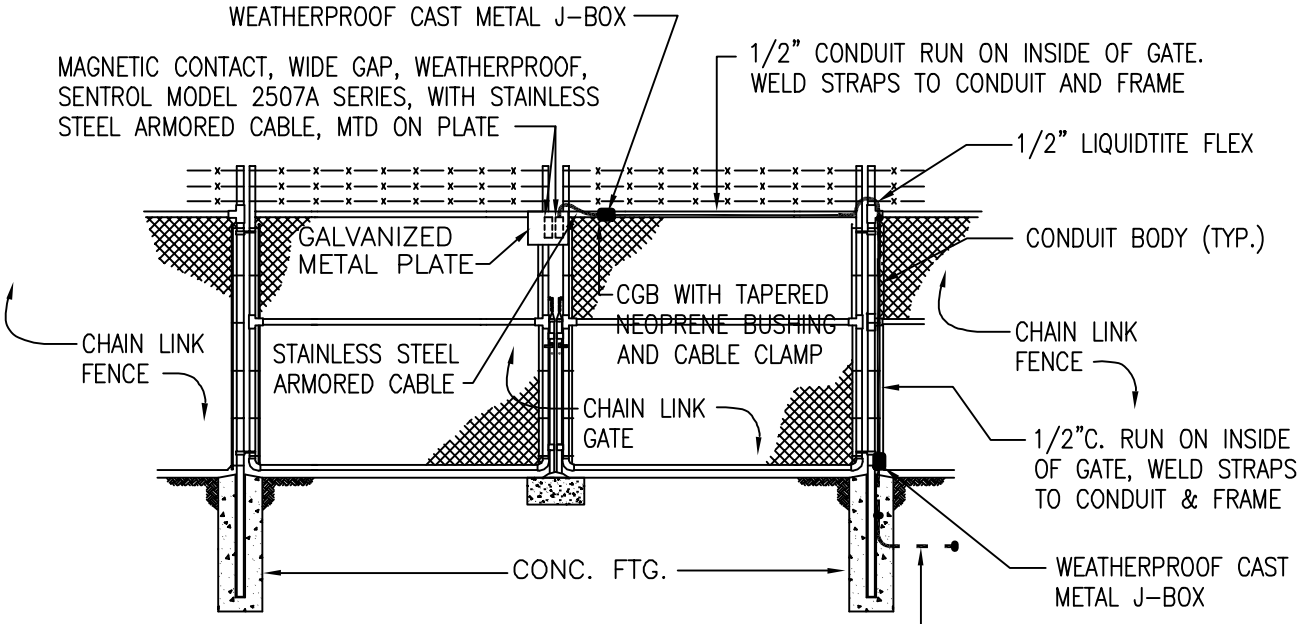

ELEVATION

DETAIL OF GATE SWITCH

NOTE: ALL MATERIALS SHALL BE HOT-DIP GALVANIZED UNLESS SPECIFIED OTHERWISE.

SEE OTHER PLATES FOR DETAILS NOT SHOWN.

2002	
REVISION	

OAHU HAWAII KAUAI	**CHAIN LINK FENCE** **SECURITY SWITCH DETAIL** **SCALE: NTS**	STANDARD DETAILS	F4

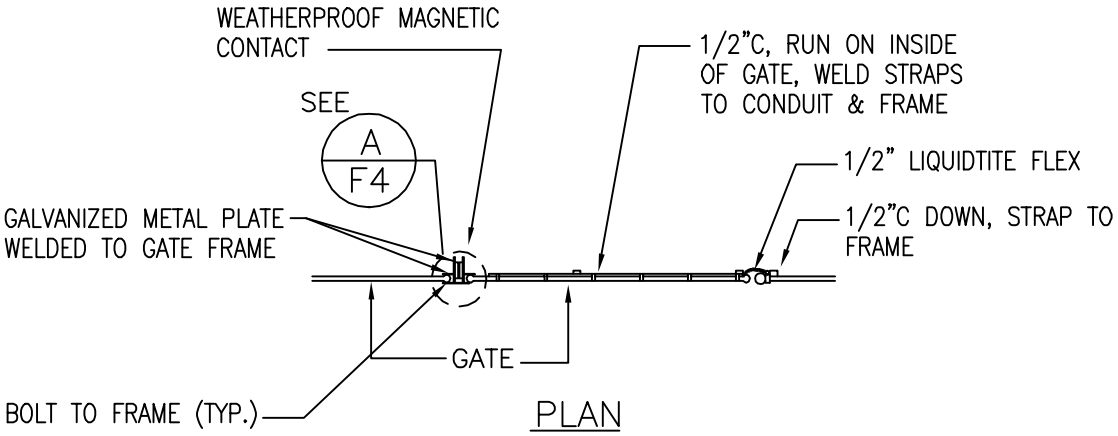

PLAN

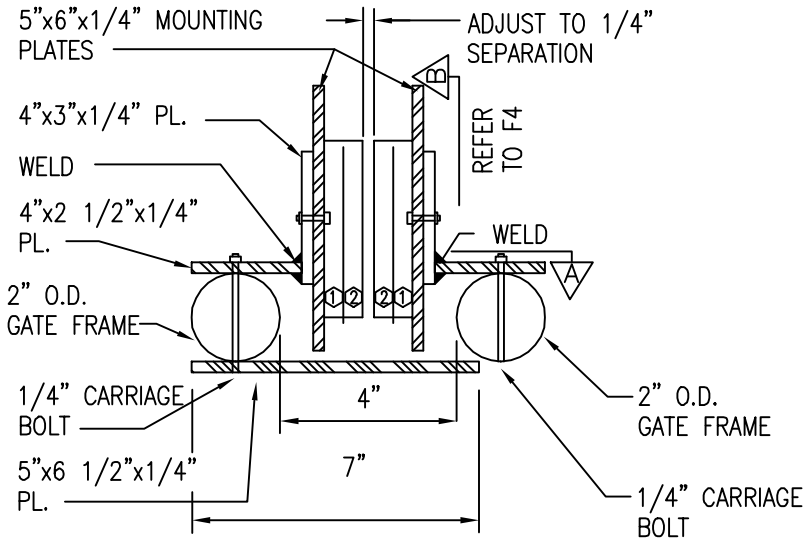

PLAN

SWITCH ASSEMBLY DESCRIPTION

1. SPACER–SENTROL #1913 OR EQUAL
2. MAGNETIC SWITCH–SENTROL #2507 AH BIASED MAGNETIC SWITCH OR APPROVED EQUAL

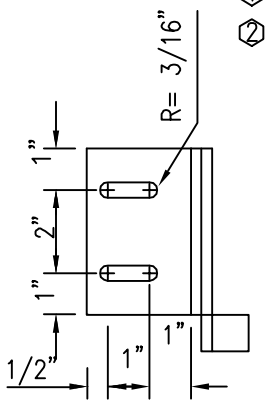

SECTION "A"

2002	
REVISION	

OAHU HAWAII KAUAI	**CHAIN LINK FENCE** **SECURITY SWITCH DETAIL** SCALE: NTS	STANDARD DETAILS	F5

	LIST OF MATERIALS
A	ANGLE FIRE HYDRANT VALVE, 2 1/2" IPT x 2 1/2" NATIONAL STANDARD FIRE HOSE COUPLING SCREW THREADS "JONES J-334" W/ CAP & CHAIN OR EQUAL.
B	2 1/2" GALV. STEEL PIPE, SCHEDULE 40 (CUT TO FIT)
C	2 1/2" GALV. STEEL 90° ELBOW
D	TEE
E	CONCRETE REACTION BLOCK
F	2 1/2" GATE VALVE, S.E.
G	CAST IRON VALVE BOX AND COVER
H	TERRA – TAPE "D"
J	2 1/2" BUSHING (S. x T.)
K	2 1/2" PVC MALE ADAPTER
L	2 1/2" PVC NIPPLE, SCHEDULE 40
M	2 1/2" BRASS NIPPLE (12" LONG)
N	6" x 2'-0" DIA. OR 2'-0" x 2'-0" SQ. SETTLEMENT SLAB

NOTE:

ALL STANDPIPES SHALL BE CLEANED AFTER INSTALLATION AND PAINTED W/ TWO COATS OF PAINT. PAINT SHALL BE DUPONT "DOLOX" HIGH VISIBILITY YELLOW OR KEM LUSTRE ENAMEL LIGHT YELLOW (NO. F-65Y12).

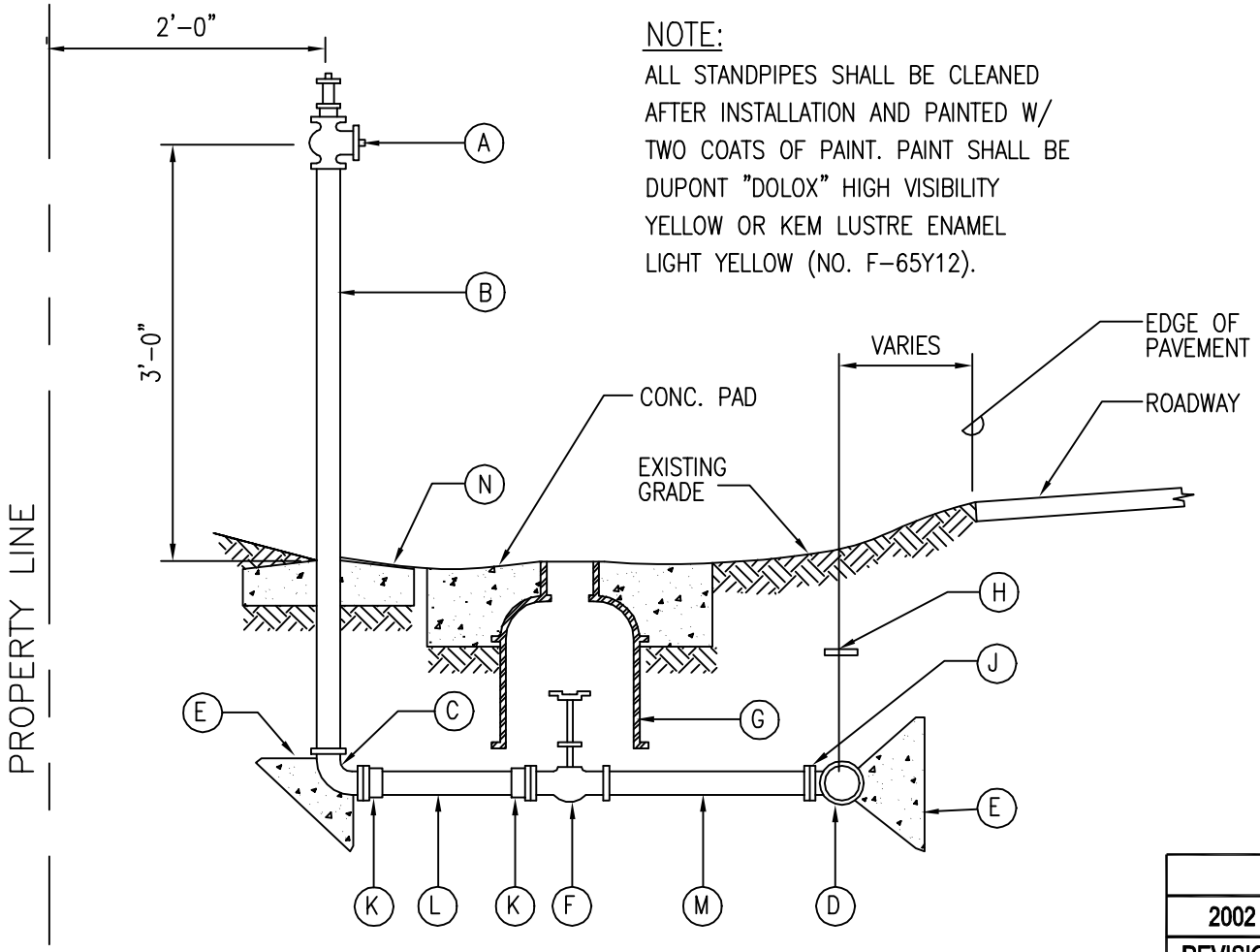

KAUAI	2 1/2" STANDPIPE DETAIL SCALE: NTS	STANDARD DETAILS	2002 REVISION FH1

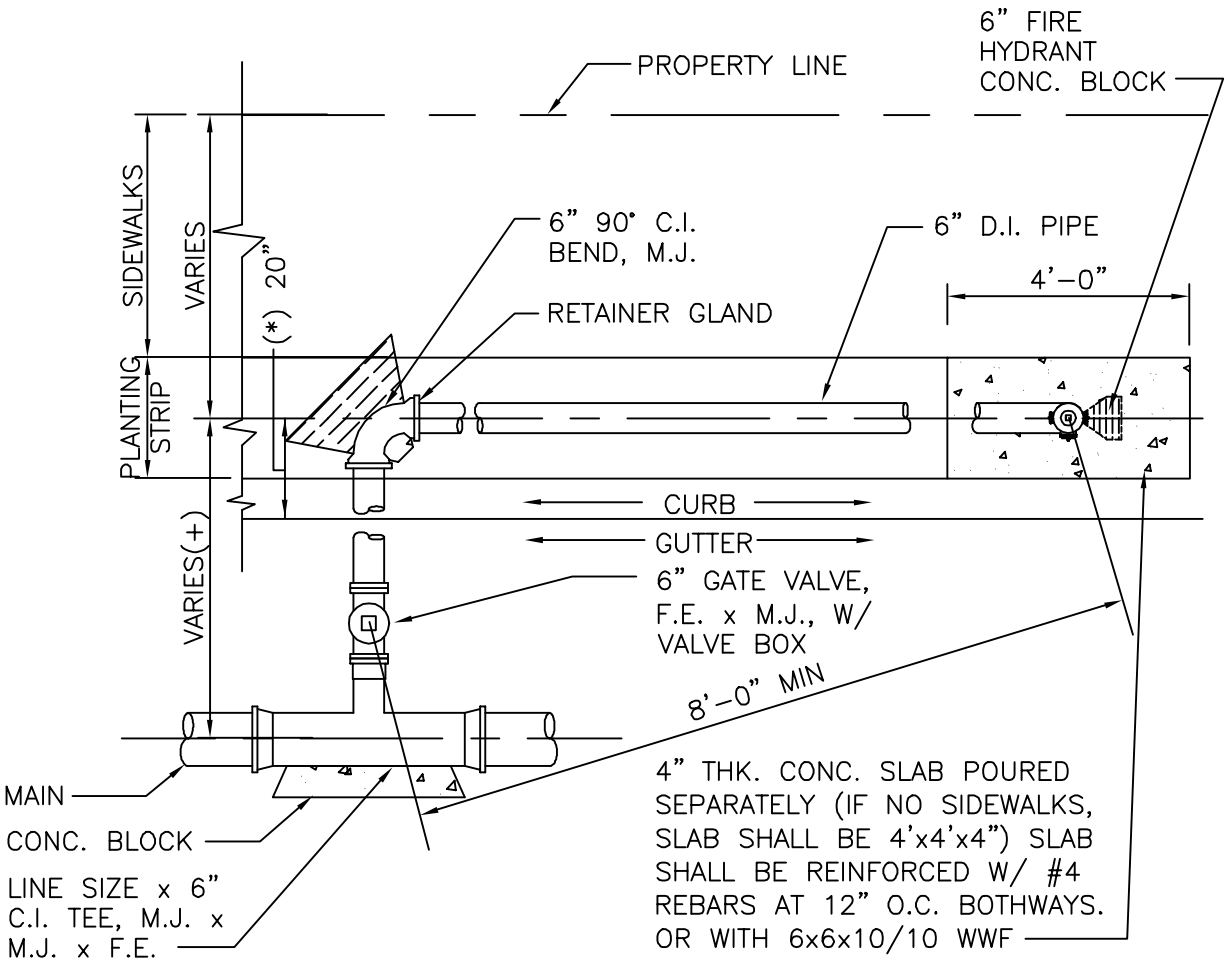

NOTES:

1. GASKETS FOR FLANGED JOINTS SHALL BE 1/8" DUCK-INSERTED RUBBER PACKING GARLOCK NO. 19.
2. BOLTS SHALL BE BREAK-OFF TYPE, 5/8" DIA. X 3" LONG MACHINE BOLTS WITH CUT THREADS, AMERICAN STANDARD HEAVY HEXAGON HEADS, STAINLESS STEEL OR SILICON BRONZE.
3. NUTS SHALL BE AMERICAN STANDARD HEAVY COLD PUNCHED HEXAGON NUTS, STAINLESS STEEL OR SILICON BRONZE. (DOES NOT APPLY TO BREAK AWAY BOLTS)
4. CONCRETE SHALL BE DWS 2500.
5. FOR AREAS WITHOUT SIDEWALKS A CONCRETE CURB OR 4" D.I. PIPE SHALL BE INSTALLED IF CALLED FOR IN THE PLANS AND AS SHOWN IN THESE DETAILS.
6. REFER TO DETAIL FH3 FOR ADDITIONAL DETAILS.

+ IF SPACE IS AVAILABLE, TAPPING VALVE/ TAPPING SLEEVE ASSEMBLY MAY BE USED WHEN APPROVED BY MANAGER.

* FOR AREAS WITH ROLLED CURB THE FIRE HYDRANT CENTERLINE SHALL BE 24" FROM THE EDGE OF THE ROLLED CURB.

			2002
			REVISION
HAWAII	HYDRANT CONNECTION LAYOUT "A" (WITH ELBOW) SCALE: NTS	STANDARD DETAILS	FH2

NOTE:
1. GASKETS FOR FLANGED JOINTS SHALL BE 1/8" DUCK-INSERTED RUBBER PACKING GARLOCK NO. 19.
2. BOLTS SHALL BE BREAK-OFF TYPE, 5/8" DIA. X 3" LONG MACHINE BOLTS WITH CUT THREADS, AMERICAN STANDARD HEAVY HEXAGON HEADS, STAINLESS STEEL OR SILICON BRONZE.
3. NUTS SHALL BE AMERICAN STANDARD HEAVY COLD PUNCHED HEXAGON NUTS, STAINLESS STEEL OR SILICON BRONZE. (DOES NOT APPLY TO BREAK AWAY BOLTS)

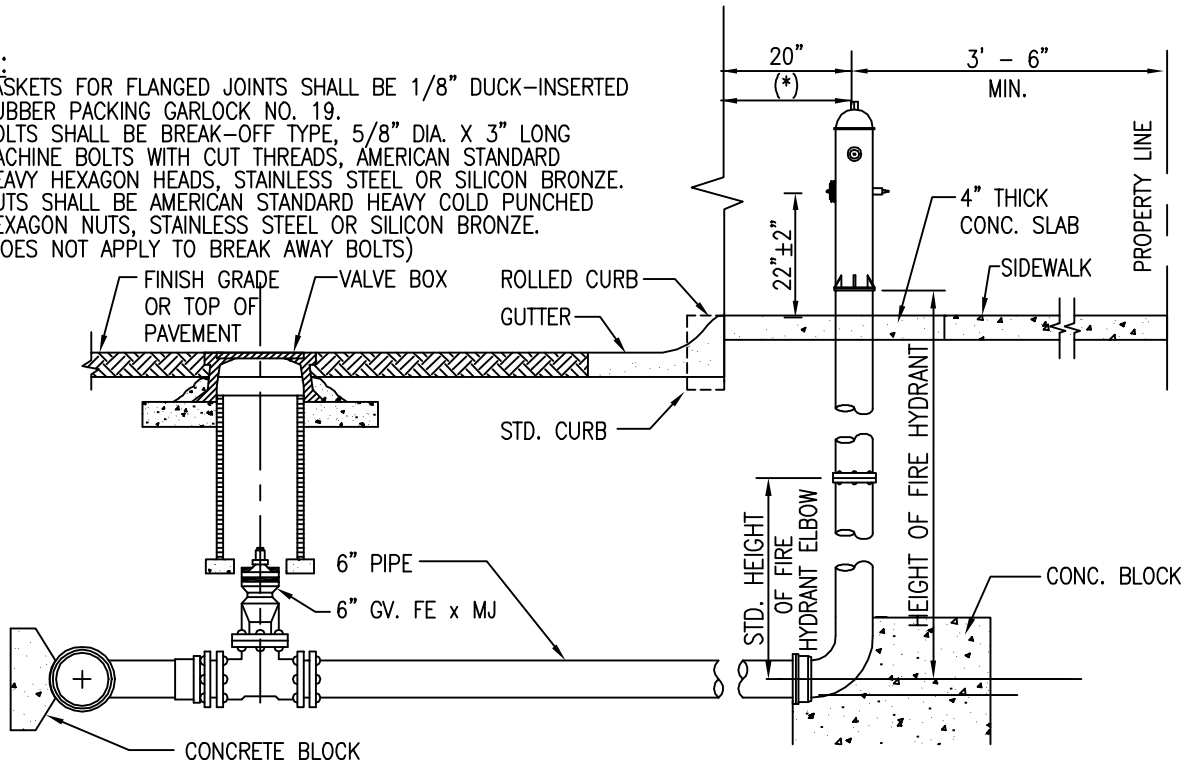

SECTION

STANDARD HYDRANT EXTENSIONS ARE AVAILABLE IN THE FOLLOWING LENGTHS: 6 TO 30 INCHES LONG IN INCREMENTS OF 6 INCHES.

NOTES:
1. CONCRETE SHALL BE DWS 2500.
2. FOR AREAS WITHOUT SIDEWALKS A CONC. CURB OR 4" D.I. PIPES GUARD POSTS SHALL BE INSTALLED IF CALLED FOR IN THE PLANS AND AS SHOWN IN THESE DETAILS.

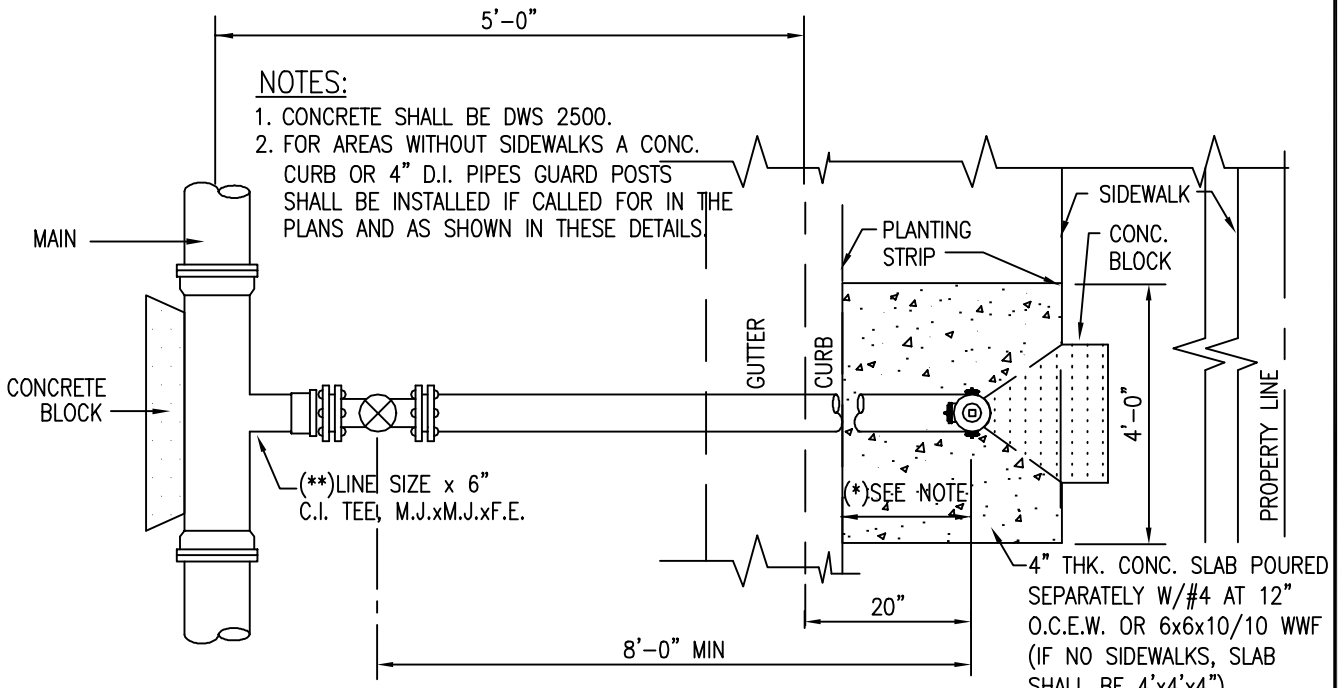

* FOR AREAS W/ ROLLED CURBS THE F.H. CENTER LINE SHALL BE 24" FROM THE EDGE OF THE ROLLED CURB.

PLAN

** TAPPING SLEEVE/TAPPING VALVE ASSEMBLY MAY BE USED WHEN APPROVED BY MANAGER.

			2002
			REVISION
HAWAII	HYDRANT CONNECTION LAYOUT "B" (STRAIGHT RUN) SCALE: NTS	STANDARD DETAILS	FH3

STANDARD HEIGHT FOR HYDRANT ELBOW
30"
36"
42"
48"

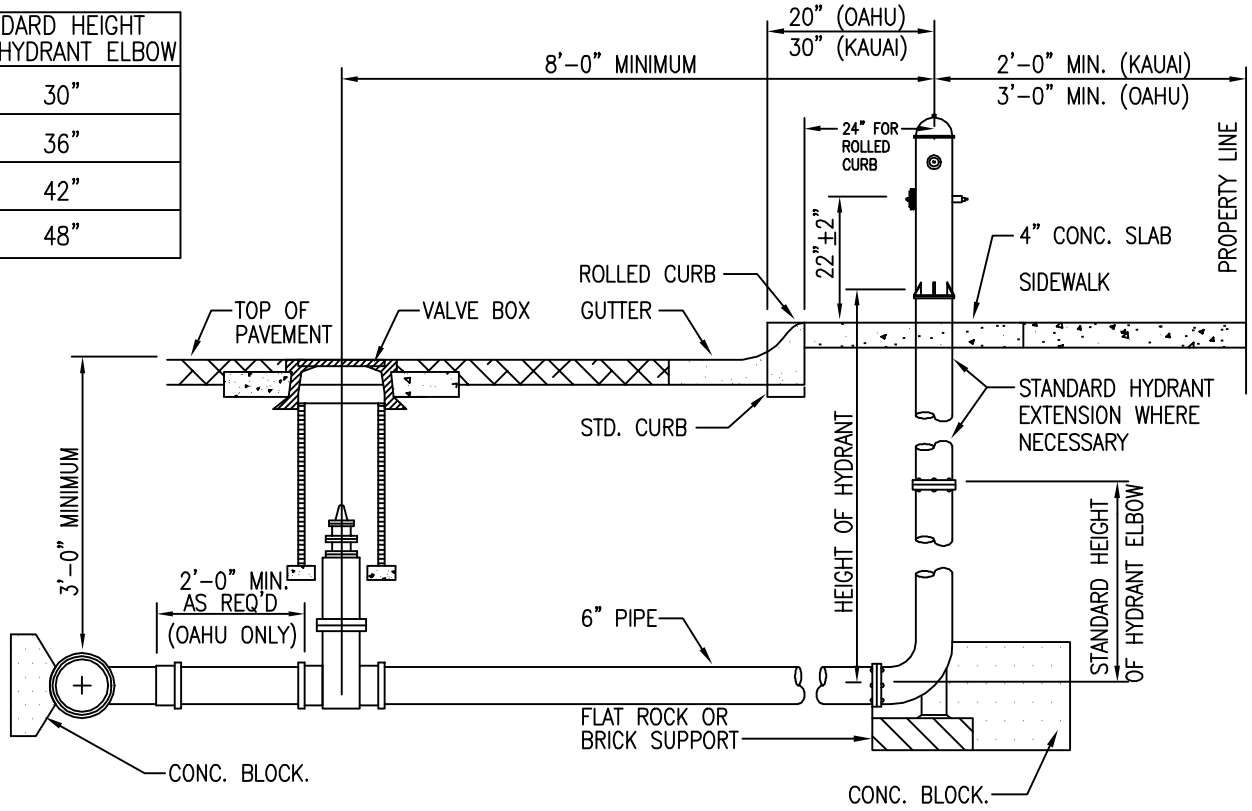

SECTION

STANDARD HYDRANT EXTENSIONS ARE AVAILABLE IN THE FOLLOWING LENGTHS: 6 TO 30 INCHES LONG IN INCREMENTS OF 6 INCHES.

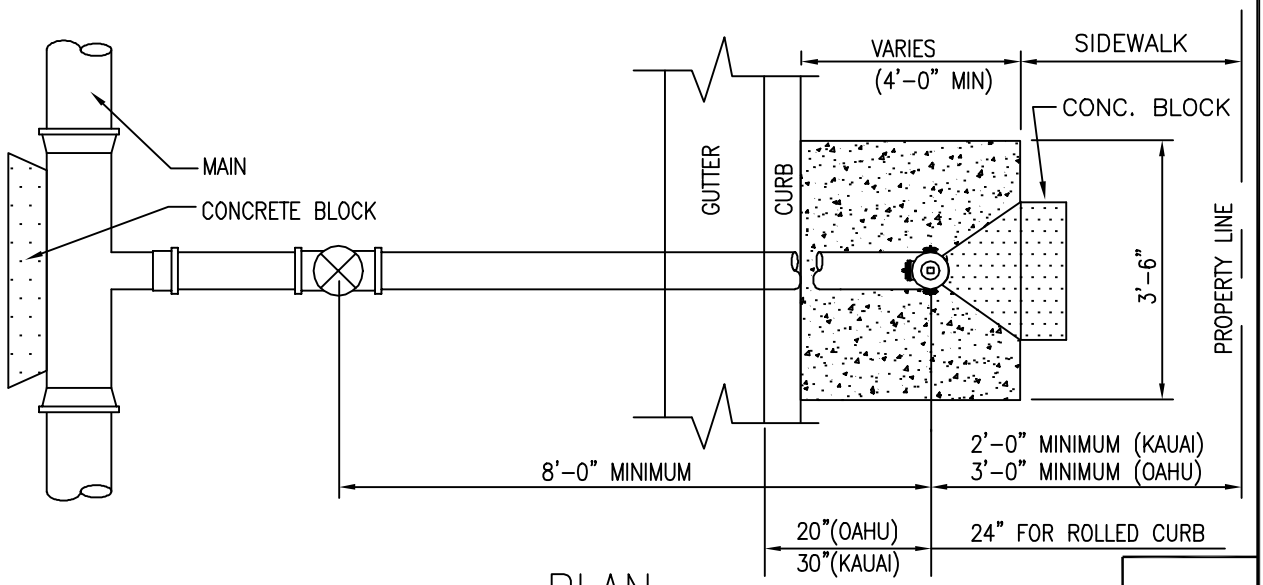

PLAN

* SEE NOTES ON PLATE FH8

2002
REVISION

KAUAI OAHU	HYDRANT CONNECTION STRAIGHT RUN SCALE: NTS	STANDARD DETAILS	FH4

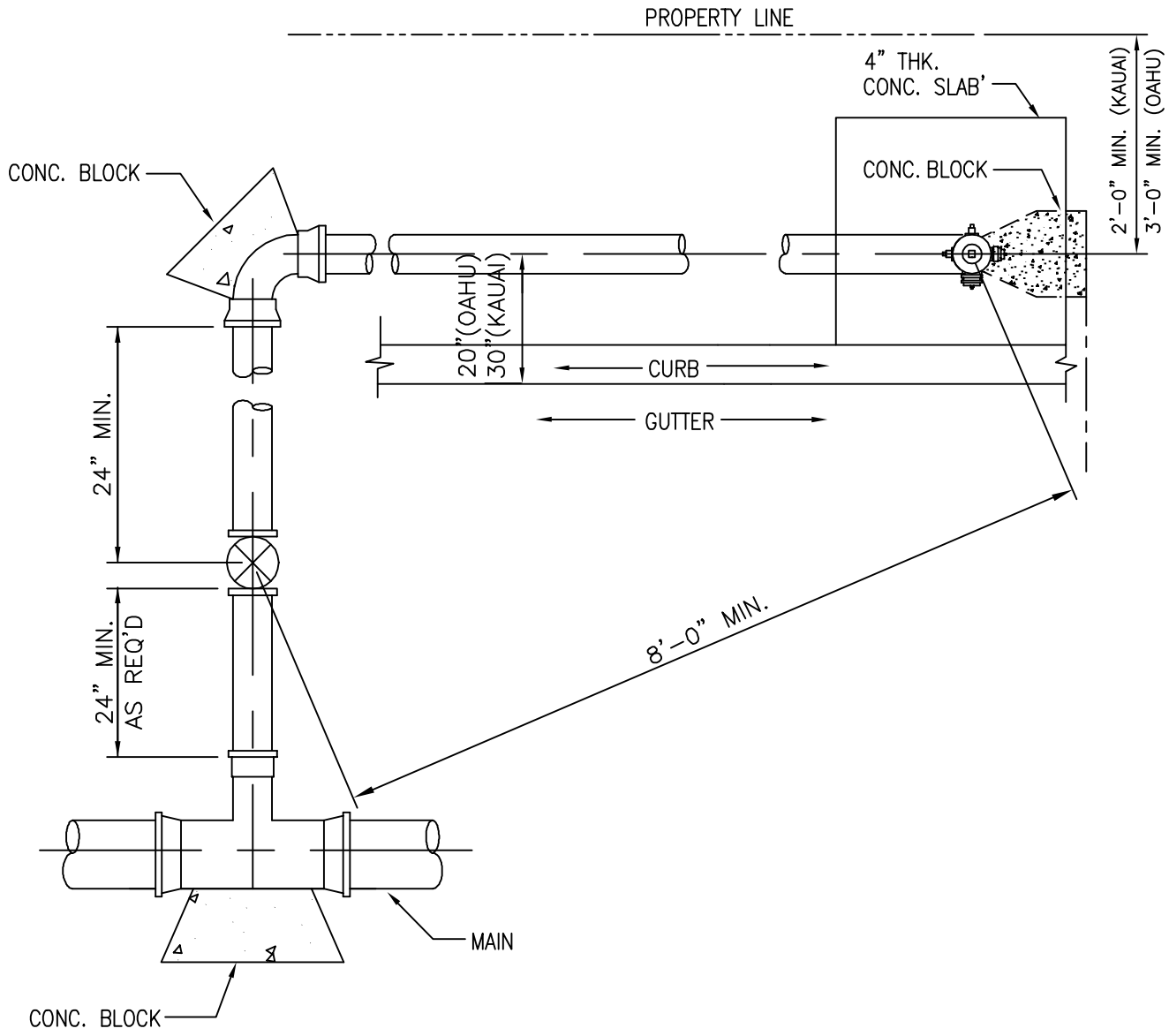

NOTES:

1. MINIMUM DIRECT DISTANCE FROM FIRE HYDRANT TO GATE VALVE SHALL BE 8'-0".
2. CONCRETE SHALL BE DWS 2500.
3. FLANGED OUTLET FOR THE TEE IS OPTIONAL FOR OAHU; MANDATORY FOR KAUAI.
4. REFER TO PLATE FH4 FOR DIMENSIONS OF 4" CONCRETE SLAB AROUND FIRE HYDRANT.
5. TAPPING SLEEVE WITH VALVE MAY BE USED. (SEE NOTE ON PLATE FH8)
6. LUBRICATE HYDRANT NOZZLE THREADS WITH NON-TOXIC GREASE.
7. INSTALL FH MARKERS (SEE PLATES FH12 AND FH13)
8. THE 4-1/2" NOZZLE SHOULD FACE PERPENDICULAR TO THE CURB/ROAD.

			2002
			REVISION
KAUAI OAHU	**HYDRANT CONNECTION** **WITH ELBOW** **SCALE: NTS**	STANDARD DETAILS	FH5

STANDARD LENGTHS FOR HYDRANT ELBOWS
30"
36"
42"
48"

HYDRANT EXTENSIONS ARE AVAILABLE IN STANDARD LENGTHS OF 6, 12, 18, 24, AND 30 INCHES.

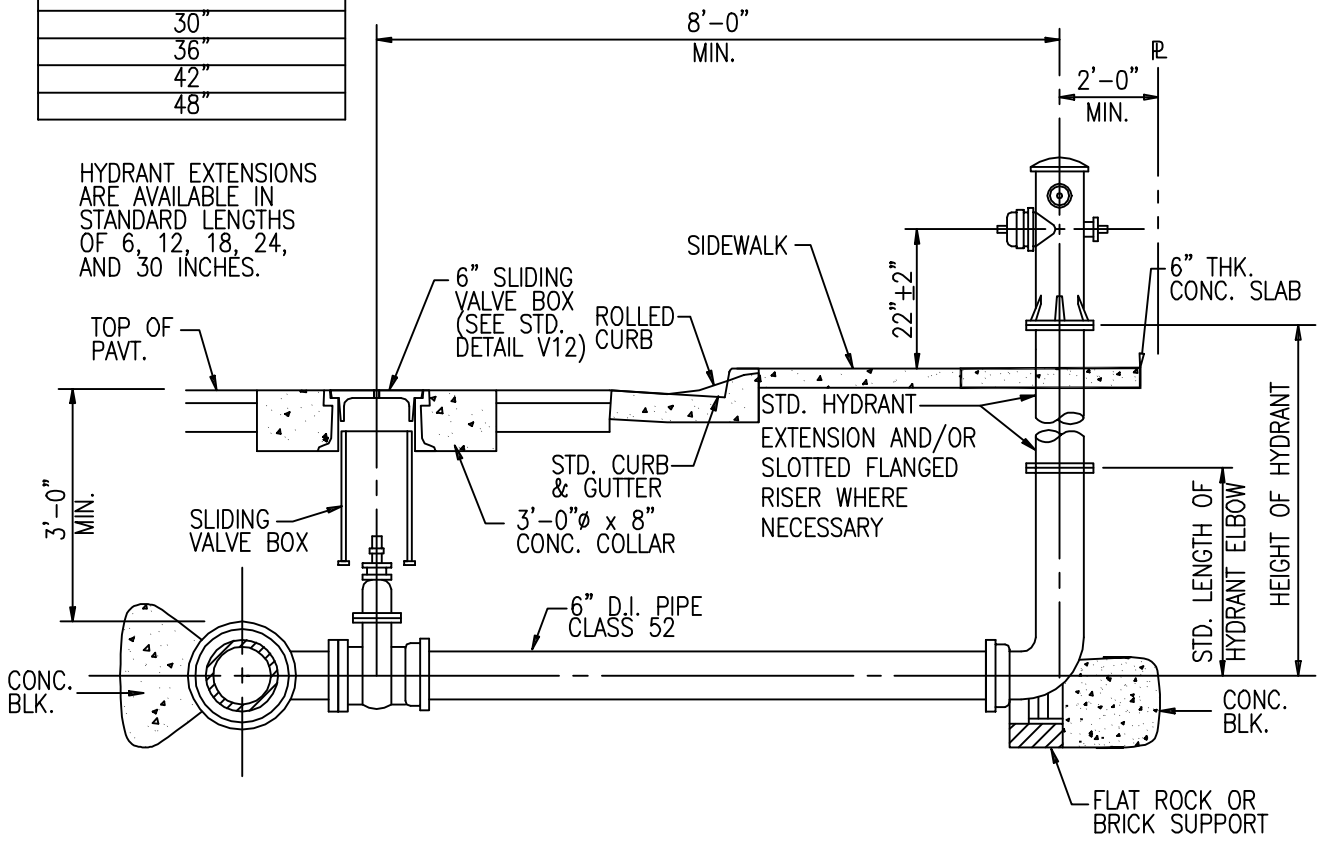

SECTION

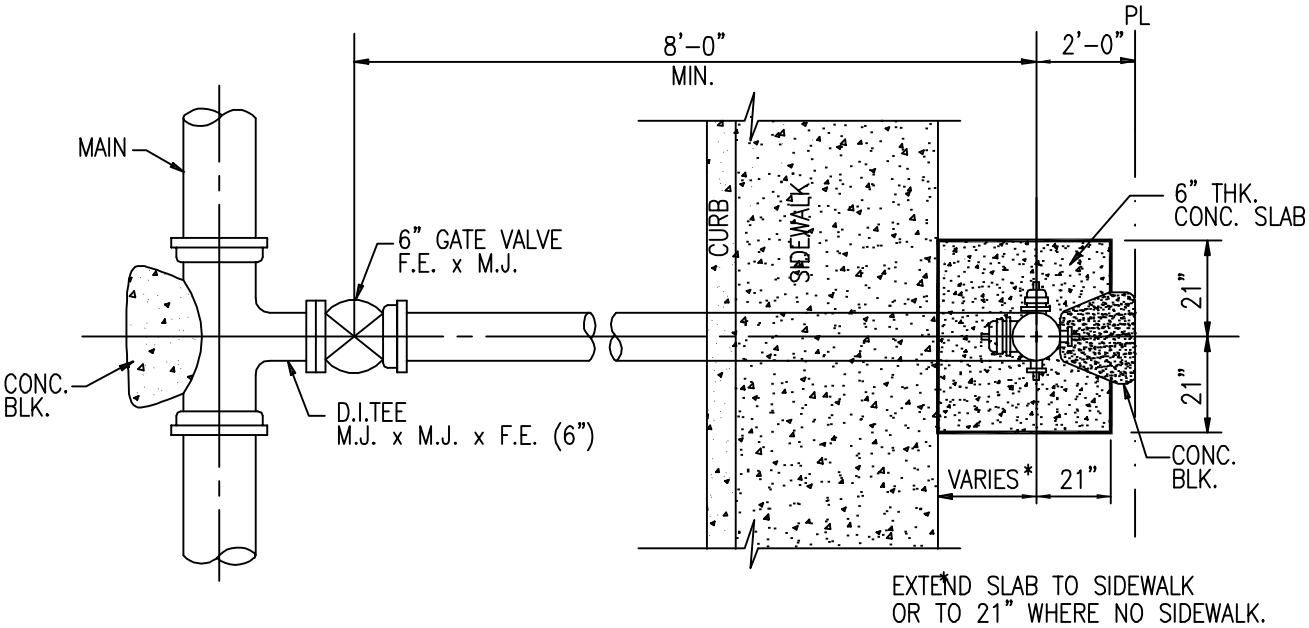

PLAN

REFER TO STANDARD DETAIL FH8 FOR NOTES.

2002
REVISION

MAUI	HYDRANT CONNECTION STRAIGHT RUN SCALE: NTS	STANDARD DETAILS	FH6

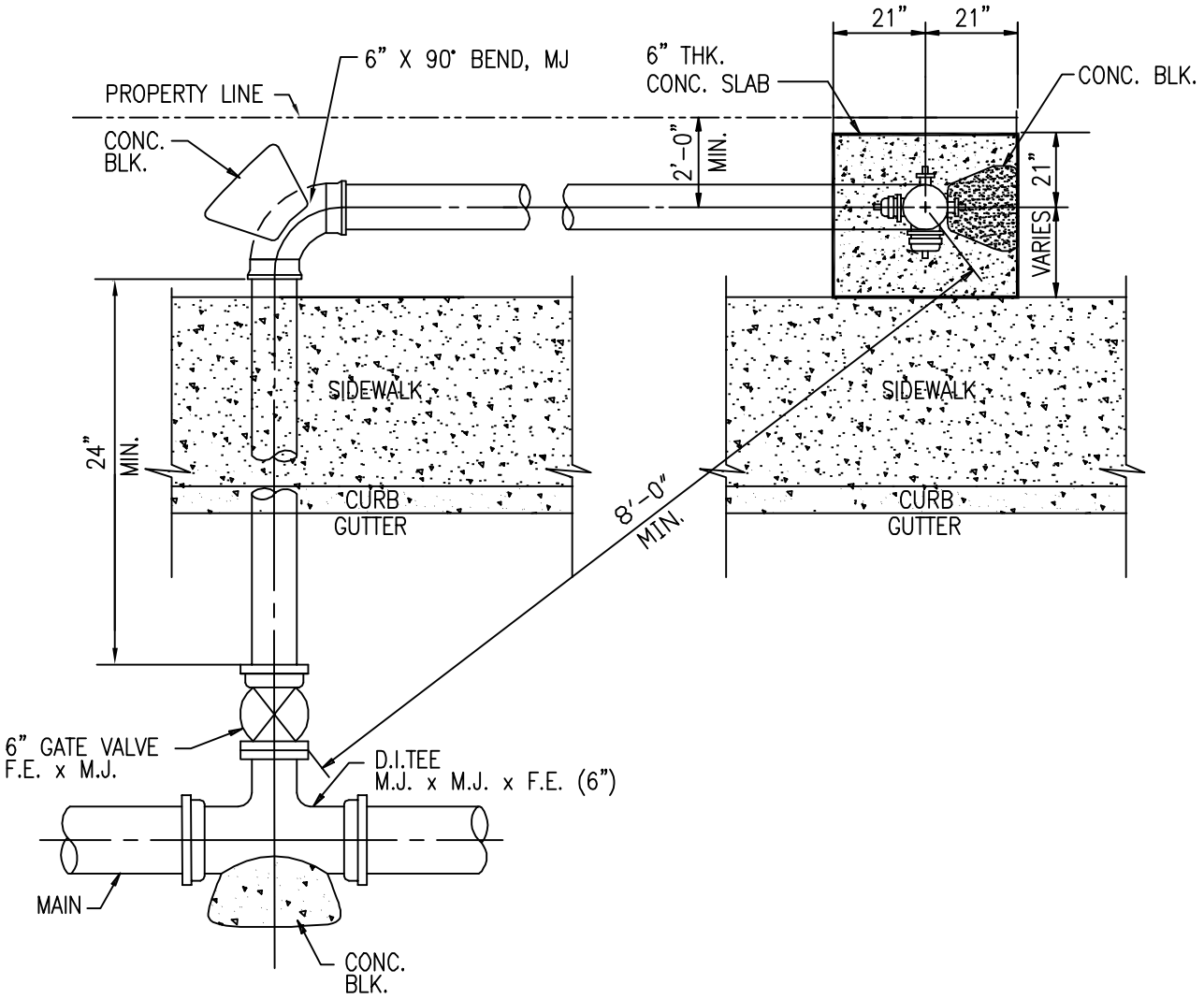

PLAN

REFER TO STANDARD DETAIL FH8 FOR NOTES.

REFER TO STANDARD DETAIL FH6 FOR ADDITIONAL INFORMATION FOR FIRE HYDRANT INSTALLATION.

			2002
			REVISION
MAUI	HYDRANT CONNECTION WITH ELBOW SCALE: NTS	STANDARD DETAILS	FH7

NOTE:

1. GASKETS FOR FLANGED JOINTS SHALL BE 1/8" DUCK-INSERTED RUBBER PACKING GARLOCK NO. 19.
2. BOLTS SHALL BE BREAK-OFF TYPE, 5/8" DIA. x 3" LONG MACHINE BOLTS WITH CUT THREADS, AMERICAN STANDARD COARSE HEXAGON HEADS, STAINLESS STEEL OR SILICON BRONZE. INSTALL BOLT WITH THREADS FACING DOWN.
3. NUTS SHALL BE AMERICAN STANDARD HEAVY COLD PUNCHED HEXAGON NUTS, STAINLESS STEEL OR SILICON BRONZE.
4. CONCRETE SHALL BE DWS 2500.
5. REFER TO PLATE FH11 FOR FIRE HYDRANT INSTALLATION WITH CURB GUARD. (OAHU & KAUAI ONLY). FOR MAUI, REFER TO PLATE FH9 WHERE NO STREET CURBING.
6. FLANGED OUTLET FOR THE TEE IS OPTIONAL FOR OAHU; MANDATORY FOR KAUAI AND MAUI.
7. TAPPING SLEEVE WITH TAPPING VALVE ASSEMBLY MAY BE USED FOR CONNECTION TO EXIST MAIN.
8. LUBRICATE HYDRANT NOZZLE THREADS WITH NON-TOXIC GREASE.
9. PROVIDE SLOTTED FLANGED RISER FOR HYDRANT AS NEEDED TO ALIGN 4-1/2" NOZZLE PERPENDICULAR TO CURB. (FOR MAUI ONLY)
10. INSTALL HYDRANT MARKERS. (SEE PLATES FH12 AND FH13)

			2002
			REVISION
KAUAI OAHU MAUI	HYDRANT CONNECTION NOTES SCALE: NTS	STANDARD DETAILS	FH8

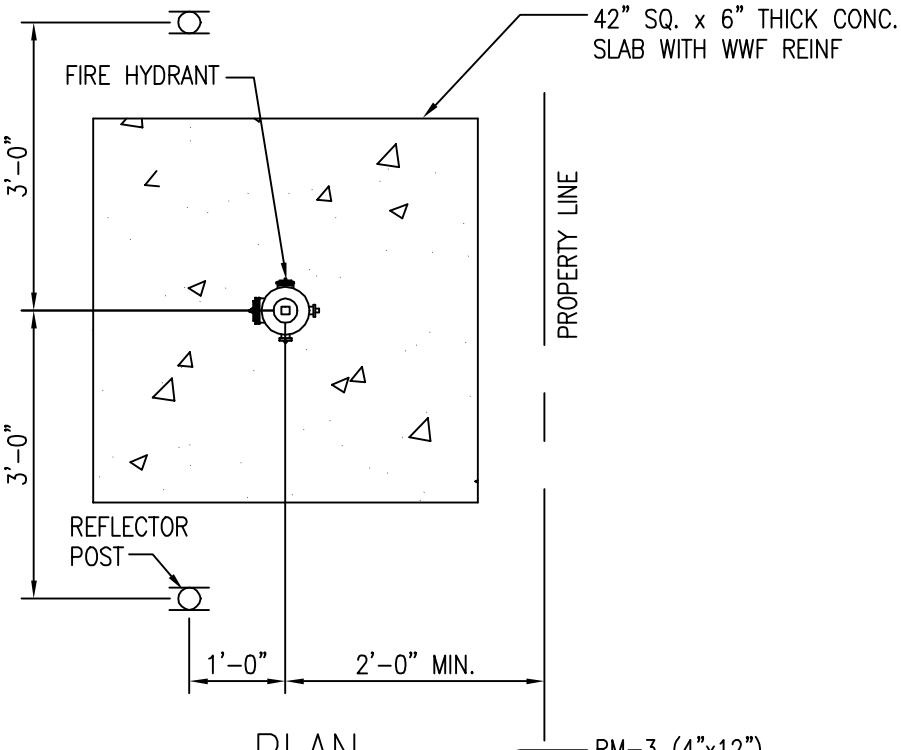

PLAN

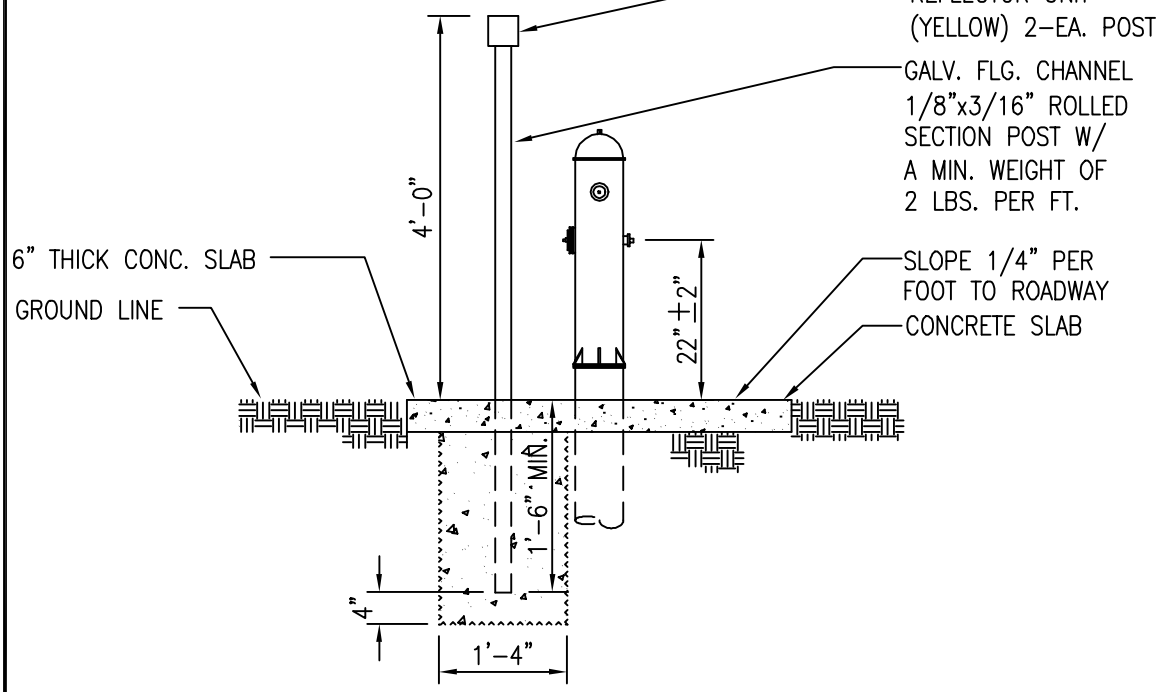

ELEVATION
(REFLECTOR POST DETAIL
FOR MARKING HYDRANTS
WITHOUT STREET CURBING)

			2002
			REVISION
MAUI	**HYDRANT CONCRETE SLAB & REFLECTOR POST** SCALE: NTS	STANDARD DETAILS	FH9

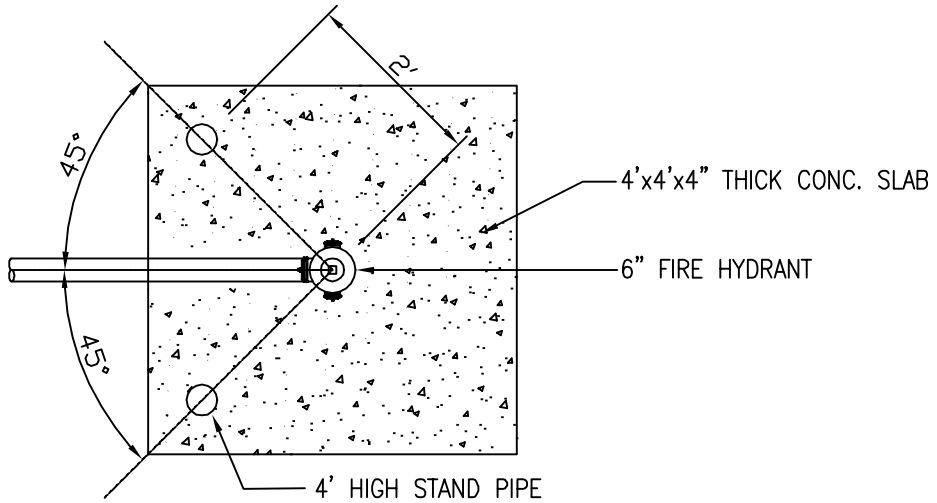

PLAN

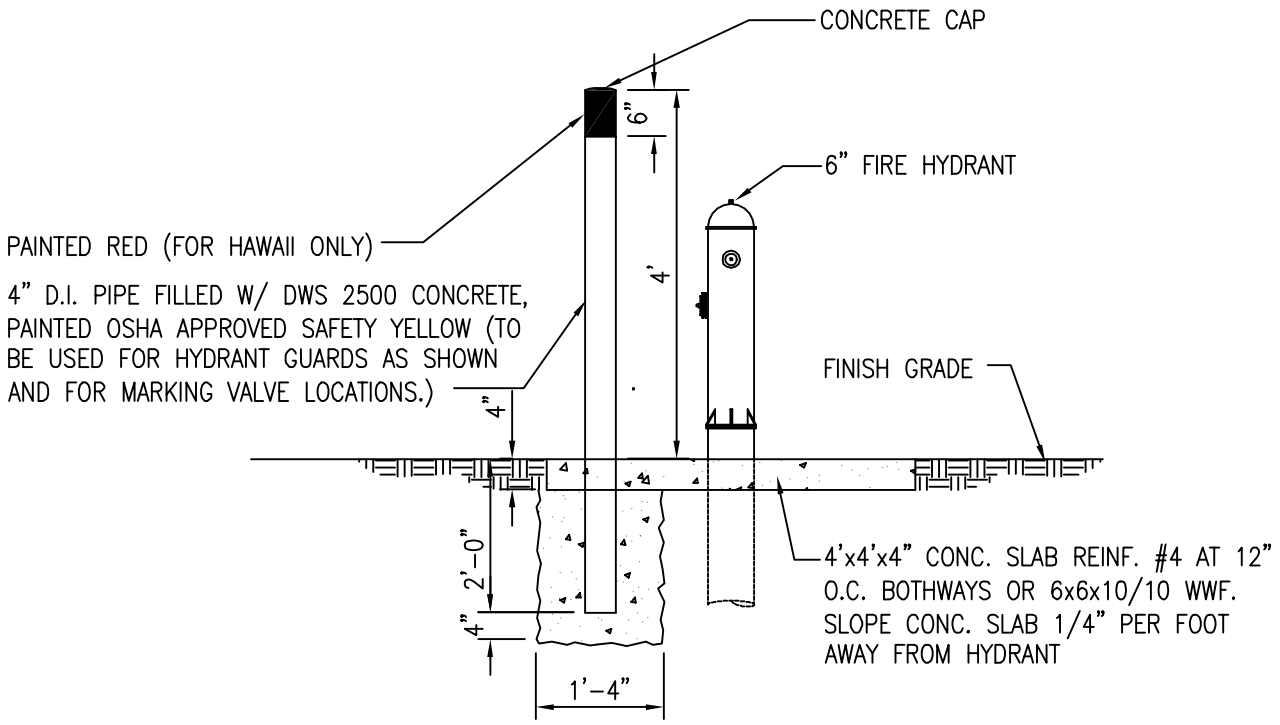

			2002
			REVISION
OAHU HAWAII	HYDRANT CONCRETE SLAB AND GUARD POSTS SCALE: NTS	STANDARD DETAILS	FH10

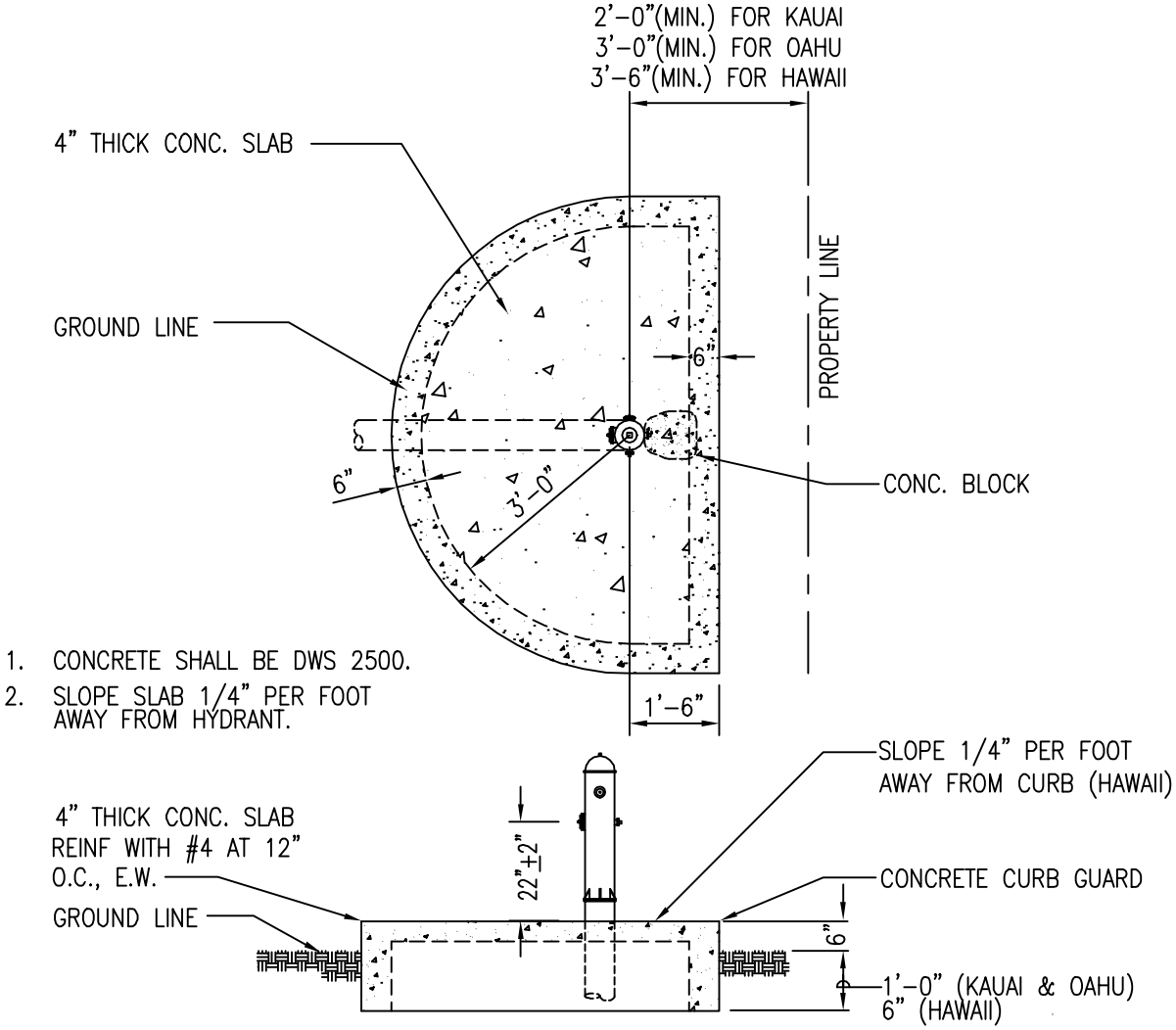

1. CONCRETE SHALL BE DWS 2500.
2. SLOPE SLAB 1/4" PER FOOT AWAY FROM HYDRANT.

DETAIL OF CURB GUARD AT HYDRANT WHERE REQUIRED

			2002
			REVISION
KAUAI OAHU HAWAII	HYDRANT CURB GUARD SCALE: NTS	STANDARD DETAILS	FH11

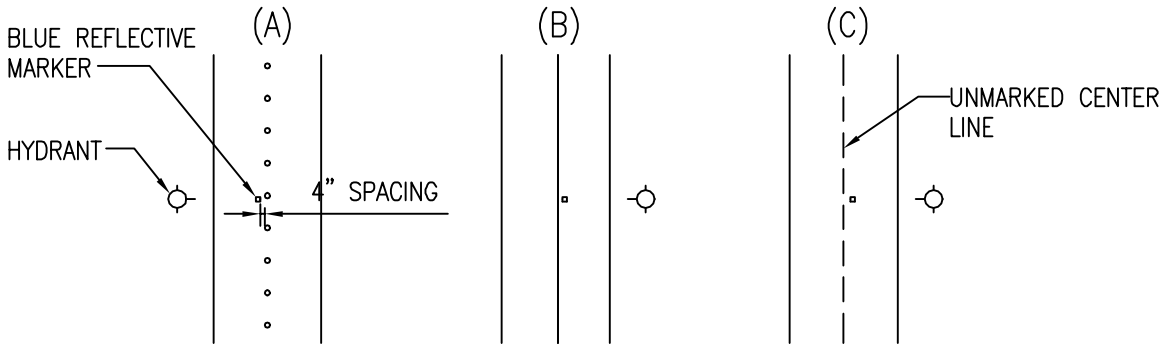

FIGURE 1
TWO LANE STREET

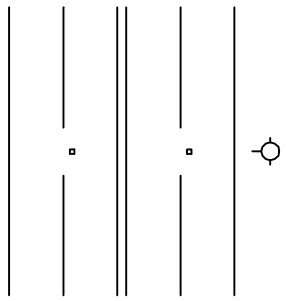

FIGURE 2
DIVIDED STREET

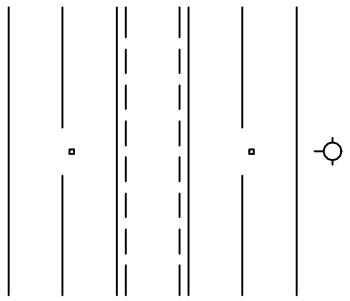

FIGURE 3
MULTI-LANE STREET W/ TURN LANE

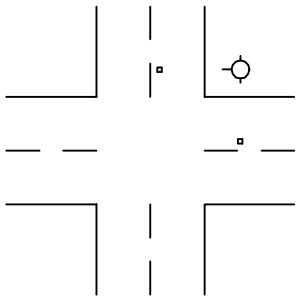

FIGURE 4
TWO LANE STREET @ INTERSECTION

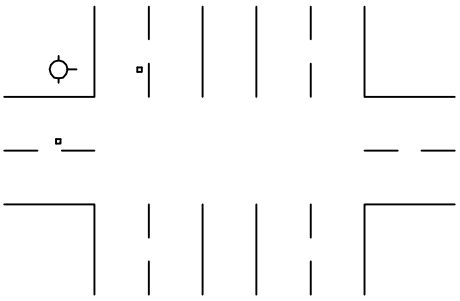

FIGURE 5
FOUR LANE STREET W/ TURN LANE @ INTERSECTION

HYDRANT MARKER LOCATION

2002	
REVISION	

KAUAI OAHU MAUI	**HYDRANT MARKER** **LOCATION FOR STREETS** **SCALE: NTS**	STANDARD DETAILS	FH12

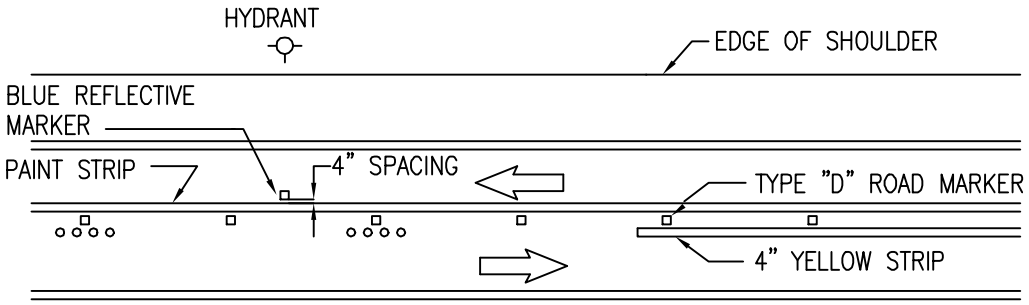

DIAGRAM A: TWO LANE HIGHWAY

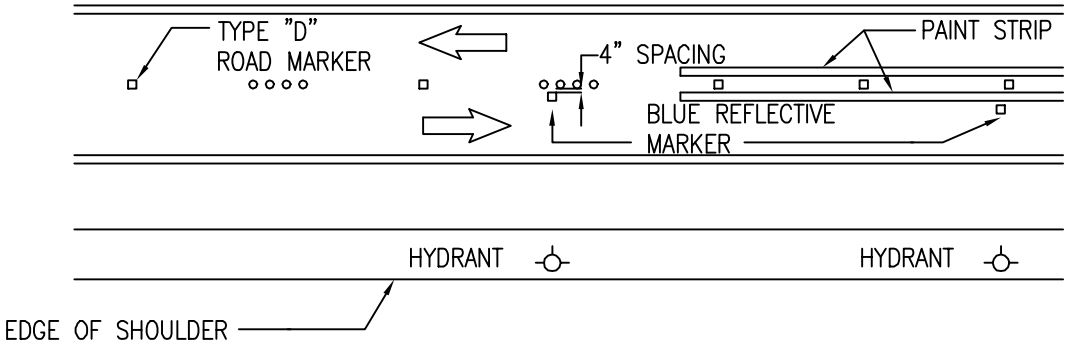

DIAGRAM B: TWO LANE HIGHWAY

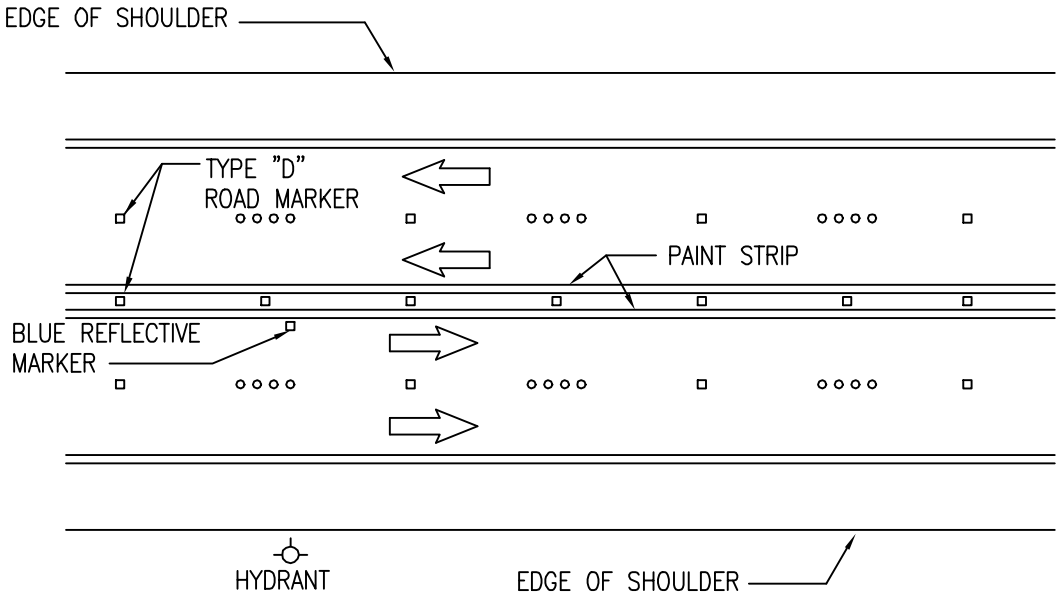

DIAGRAM C: MULTI-LANE HIGHWAY

			2002
			REVISION
KAUAI OAHU MAUI	**HYDRANT MARKER** **LOCATION FOR HIGHWAYS** SCALE: NTS	STANDARD DETAILS	FH13

SCHEDULE OF FITTINGS

ITEM	DESCRIPTION	SINGLE SERVICE
A	BRONZE SERVICE SADDLE W/ 1" CC TAP FOR C-900 PVC PIPE & D.I. PIPE	1
B	1" CC x 1" MPT BALL CORPORATION	1
C	PACK JOINT COUPLINGS (FORD C14-44 OR APPROVED EQUAL)	1
D	1" COPPER TUBE, TYPE "K" SOFT	1
E	1" 90° COPPER ELBOW, S x S	1
F	1" COPPER MALE ADAPTER, SXT	1
G	ANGLE BALL VALVE, 1" FEMALE IPT INLET x 3/4" METER COUPLING NUT OUTLET (FORD BA13-342W OR APPROVED EQUAL)	1
H	METER SPACER, SUPPLIED BY DEPT. OF WATER & INSTALLED BY CONTRACTOR	1
I	BALL VALVE W/ HANDLE, 3/4" METER COUPLING NUT INLET x 1" FEMALE IPT OUTLET (FORD B13-342 W/ HT-34 HANDLE OR APPROVED EQUAL)	1
J	LINESETTER, 1" COPPER TUBE, TYPE "K" SOFT, 12" LONG (SEE STD. DET. L3)	1
K	1" PLASTIC THREAD PROTECTOR	1
L	TYPE "B" CONCRETE METER BOX W/ CAST IRON COVER	1
M	TEE W/ 1" BUSHING (WHEN CONNECTING TO 3" OR SMALLER PIPE)	1

NOTE:
INSTALL TYPE "X" CONC. METER BOX W/ CAST IRON COVER IN SIDEWALK OR PAVED AREAS. TOP OF METER BOX TO BE FLUSHED WITH FINISHED GRADE.

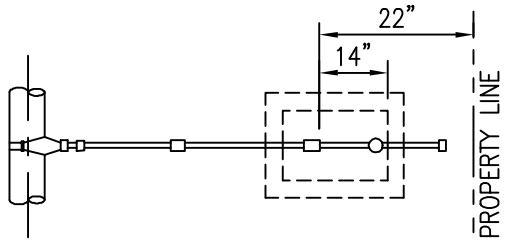

PLAN

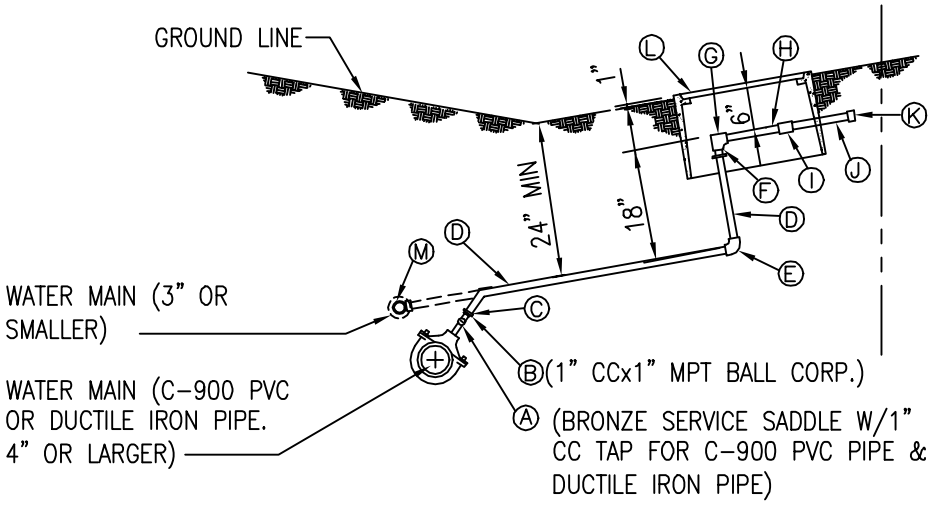

PROFILE

			2002
			REVISION
KAUAI	**SINGLE SERVICE LATERAL** **PLAN, PROFILE & MATERIAL LIST** SCALE: NTS	STANDARD DETAILS	L1

SCHEDULE OF FITTINGS

ITEM	DESCRIPTION	DOUBLE SERVICE
A	BRONZE SERVICE SADDLE W/ 1-1/2" CC TAP FOR C-900 PVC PIPE AND DUCTILE IRON PIPE	1
B	1-1/2" CC x 1-1/2" MPT BALL CORPORATION	1
C	PACK JOINT COUPLING (FORD C14-66 OR APPROVED EQUAL)	1
D	1-1/2" COPPER TUBE, TYPE "K" SOFT	2
E	1" 90° COPPER ELBOW, S x S	2
F	1" COPPER MALE ADAPTER, S x T	2
G	ANGLE BALL VALVE, 1" FEMALE IPT INLET x 3/4" METER COUPLING NUT OUTLET (FORD BA13-342W OR APPROVED EQUAL)	2
H	METER SPACER, SUPPLIED BY DEPT. OF WATER & INSTALLED BY CONTRACTOR	2
I	BALL VALVE W/ HANDLE, 3/4" METER COUPLING NUT INLET x 1" FEMALE IPT OUTLET (FORD B13-342 W/ HT-34 HANDLE OR APPROVED EQUAL)	2
J	LINESETTER, 1" COPPER TUBE, TYPE "K" SOFT, 12" LONG (SEE STD. DET. L3)	2
K	1" PLASTIC THREAD PROTECTOR	2
L	TYPE "B" CONCRETE METER BOX WITH CAST IRON COVER	2
M	1" x 1" x 1-1/2" COPPER TEE, S x S x S	1
N	TEE W/ 1-1/2" BUSHING (WHEN CONNECTING TO 3" OR SMALLER PIPE)	1

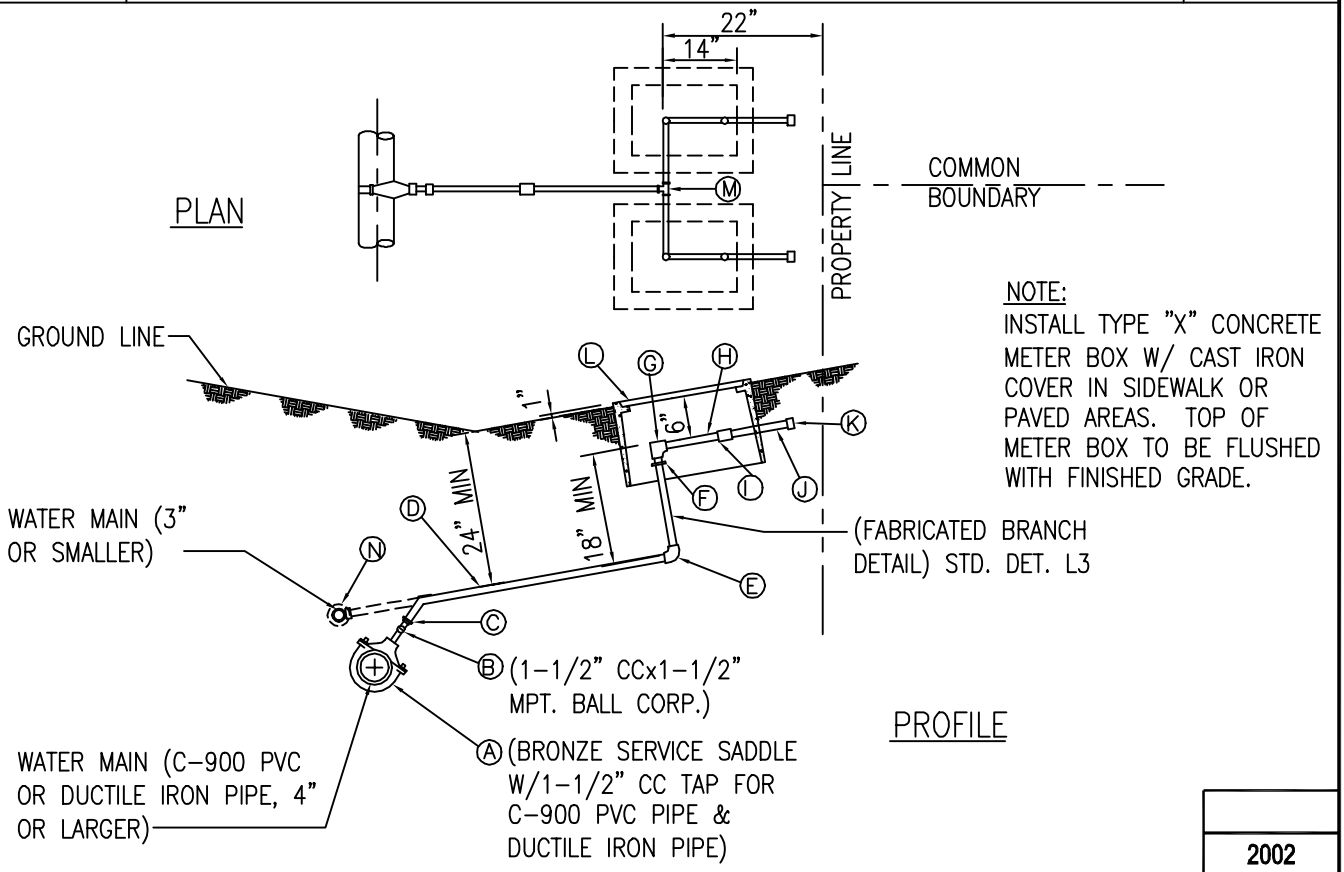

NOTE:
INSTALL TYPE "X" CONCRETE METER BOX W/ CAST IRON COVER IN SIDEWALK OR PAVED AREAS. TOP OF METER BOX TO BE FLUSHED WITH FINISHED GRADE.

			2002
			REVISION
KAUAI	**DOUBLE SERVICE LATERAL** **PLAN, PROFILE & MATERIAL LIST** SCALE: NTS	STANDARD DETAILS	L2

SCHEDULE OF COPPER FITTINGS

NO.	DESCRIPTION	SINGLE SERVICE	DOUBLE SERVICE
A	1" COPPER TUBE, TYPE 'K'	1	1
B	1" COPPER MALE ADAPTER	1	2
C	1" X 90° ELBOW (CAST SOLDER)	1	2
D	1" X 1" X 1 1/2" TEE, (CAST SOLDER)		1
E	ANGLE VALVE, 1" FEMALE IPT, INLET 3/4" METER COUPLING NUT OUTLET (FORD KV13-342W OR APPROVED EQUAL)	1	2

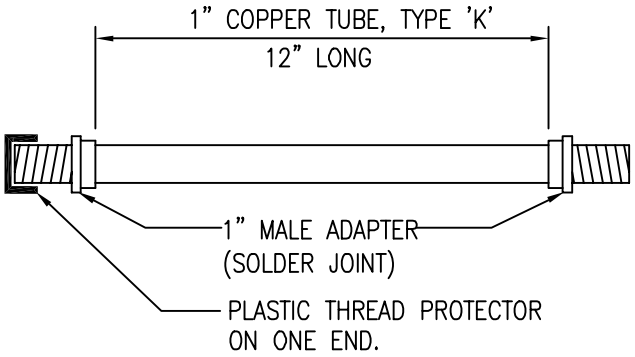

LINESETTER DETAIL

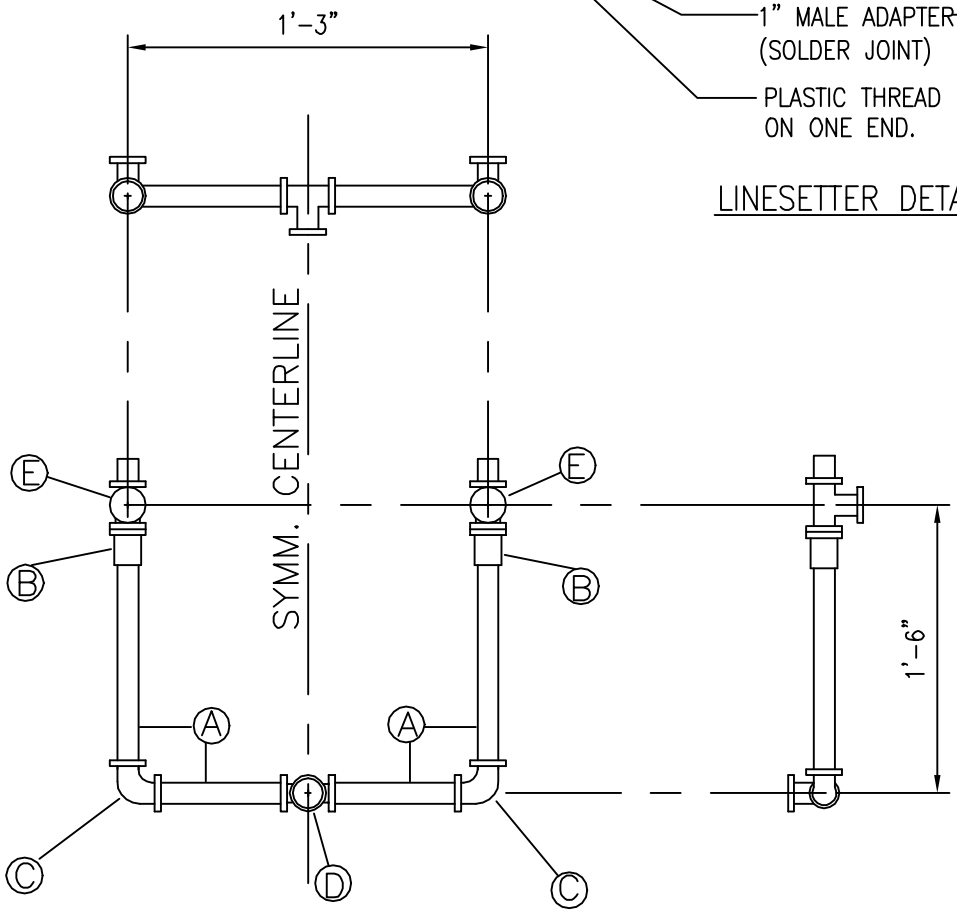

FABRICATED BRANCH PIPE DETAIL

2002	
REVISION	

KAUAI	FABRICATED BRANCH PIPE AND LINESETTER DETAIL SCALE: NTS	STANDARD DETAILS	L3

ITEM	DESCRIPTION	SIZE
A	SERVICE SADDLE (SIZE DEPENDS UPON MAIN)	1 1/2" CC TAP
B	BALL CORPORATION (FORD FB 400 OR APPROVED EQUAL)	1 1/2" CC X 1 1/2" MPT
C	PACK JOINT COUPLING (FORD C14-66 OR APPROVED EQUAL)	1 1/2"
D	COPPER TUBE TYPE "K" SOFT	1 1/2"
E	90° COPPER ELBOW	1 1/2"
F	COPPER MALE ADAPTER	1 1/2" X 1"
G	ANGLE BALL VALVE (FORD BA13-444W OR APPROVED EQUAL)	1"
H	METER SPACER (TO BE SUPPLIED BY THE DEPT. OF WATER & INSTALLED BY CONTRACTOR)	1"
I	BALL VALVE(FORD B13-444W W/HT 34 OR APPROVED EQUAL)	1"
J	COPPER MALE ADAPTER	1 1/2"
K	TYPE "X" CONC. METER BOX W/ C.I. COVER	---

SCHEDULE OF FITTINGS

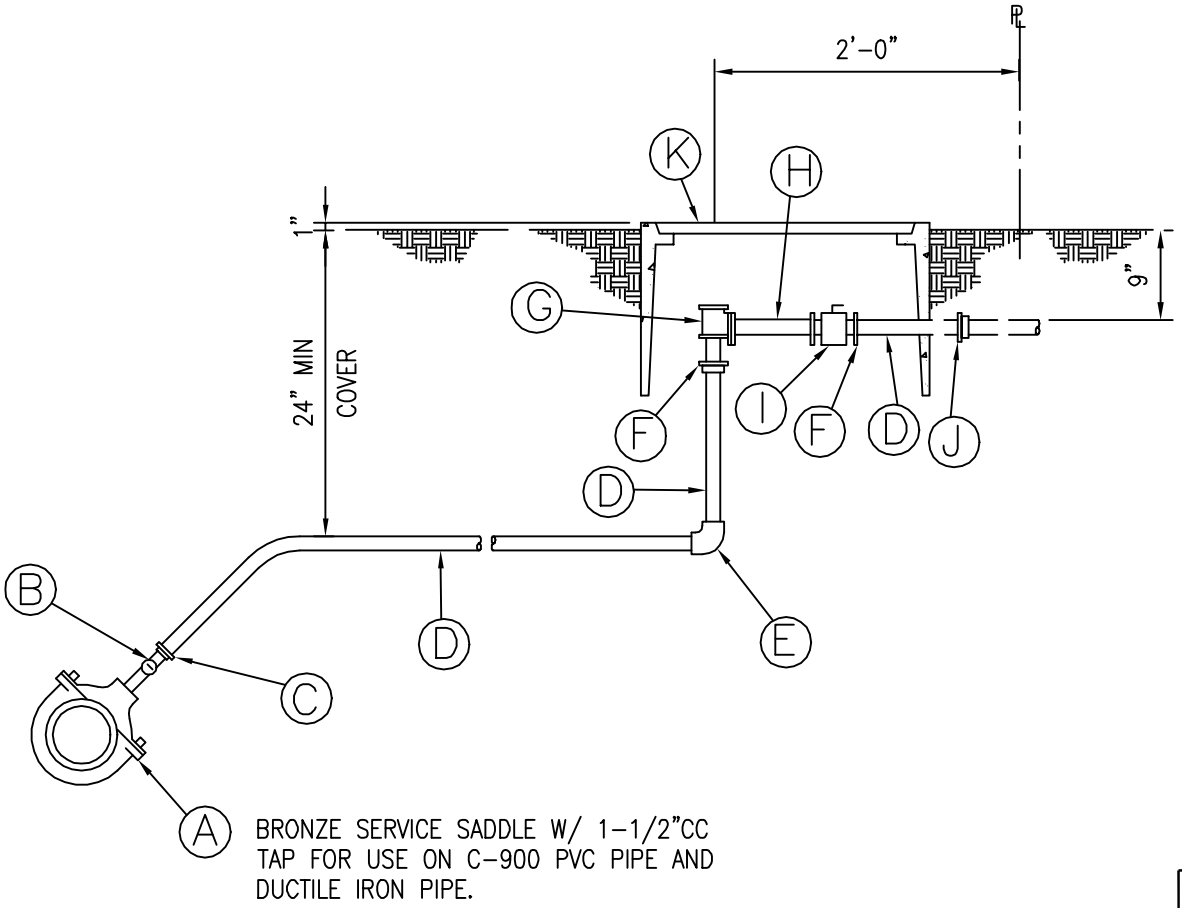

PROFILE

			2002
			REVISION
KAUAI	**ONE INCH METER** **PROFILE & MATERIAL LIST** SCALE: NTS	STANDARD DETAILS	L4

ITEM	DESCRIPTION	SIZE
A	SERVICE SADDLE (SIZE DEPENDS UPON MAIN)	2" CC TAP
B	BALL CORPORATION (FORD FB 400 OR APPROVED EQUAL)	2" CC X MPT
C	PACK JOINT COUPLING (FORD C14-77 OR APPROVED EQUAL)	2"
D	COPPER TUBE TYPE "K" SOFT	2"
E	90° COPPER ELBOW	2"
F	COPPER MALE ADAPTER	2" X 1 1/2"
G	ANGLE BALL VALVE (FORD BFA13-666W OR APPROVED EQUAL)	1 1/2"
H	METER SPACER (TO BE SUPPLIED BY THE DEPT OF WATER & INSTALLED BY CONTRACTOR)	1 1/2"
I	BALL VALVE (FORD BF13-676W W/ HB67S OR APPROVED EQUAL)	1 1/2"
J	COPPER MALE ADAPTER	2"
K	TYPE "X" CONC. METER BOX W/ C.I. COVER	——

SCHEDULE OF FITTINGS

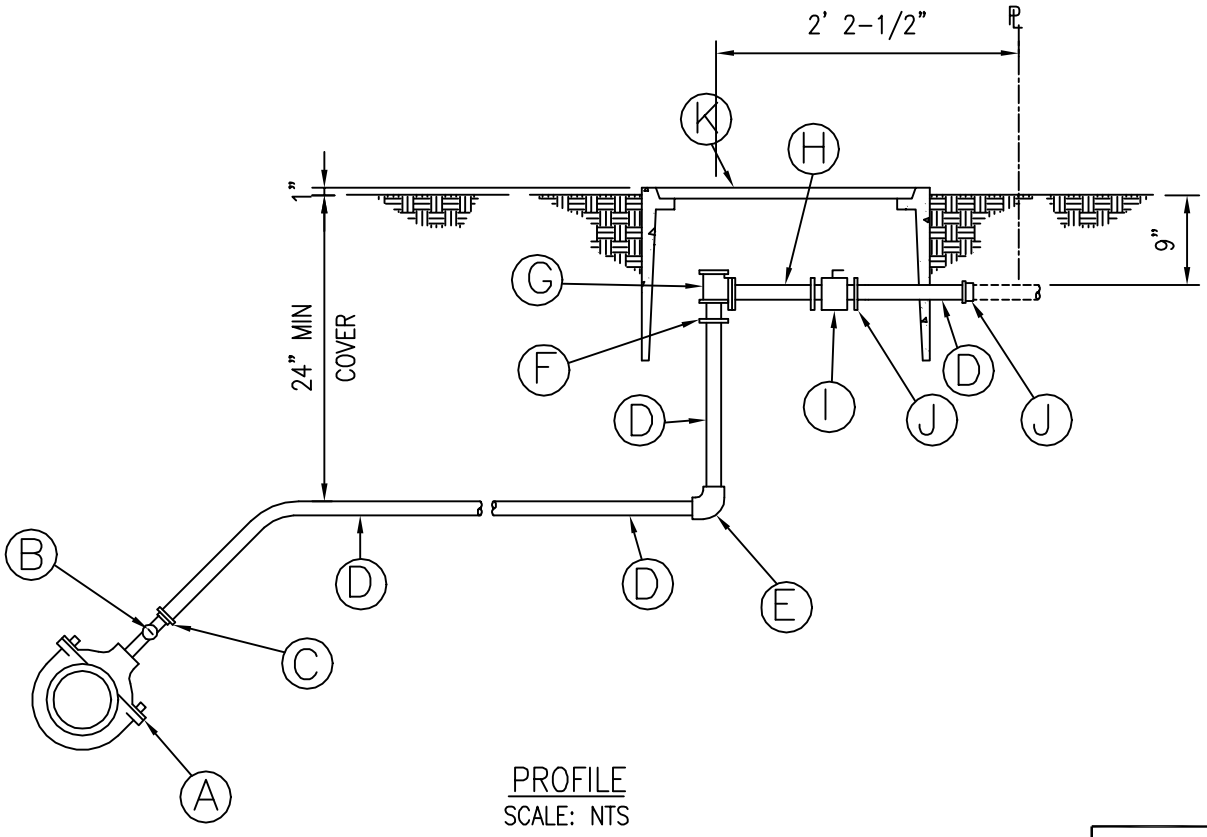

PROFILE
SCALE: NTS

BRONZE SERVICE SADDLE W/ 2" CC TAP FOR USE ON C-900 PVC PIPE AND DUCTILE IRON PIPE

2002
REVISION

KAUAI	1 1/2" INCH METER PROFILE & MATERIAL LIST SCALE: NTS	STANDARD DETAILS	L5

ITEM	DESCRIPTION	SIZE
A	SERVICE SADDLE (SIZE DEPENDS UPON MAIN)	2" CC TAP
B	BALL CORPORATION (FORD FB 800 OR APPROVED EQUAL)	2" CC X 2 1/2" MPT
C	PACK JOINT COUPLING (FORD C14-88 OR APPROVED EQUAL)	2 1/2"
D	COPPER TUBE TYPE "K" SOFT	2 1/2"
E	90° COPPER ELBOW	2 1/2"
F	COPPER FLUSH BUSHING	2 1/2" C X 2" FTG.
G	COPPER TUBE TYPE "K" SOFT	2"
H	COPPER MALE ADAPTER	2"
I	ANGLE BALL VALVE (FORD BFA13-777W OR APPROVED EQUAL)	2"
J	METER SPACER (TO BE SUPPLIED BY THE DEPT. OF WATER & INSTALLED BY CONTRACTOR)	2"
K	BALL VALVE (FORD BF13-787W W/ HB 67S OR APPROVED EQUAL)	2"
L	COPPER MALE ADAPTER	2 1/2"
M	TYPE III METER BOX FRAME AND COVER	———

SCHEDULE OF FITTINGS

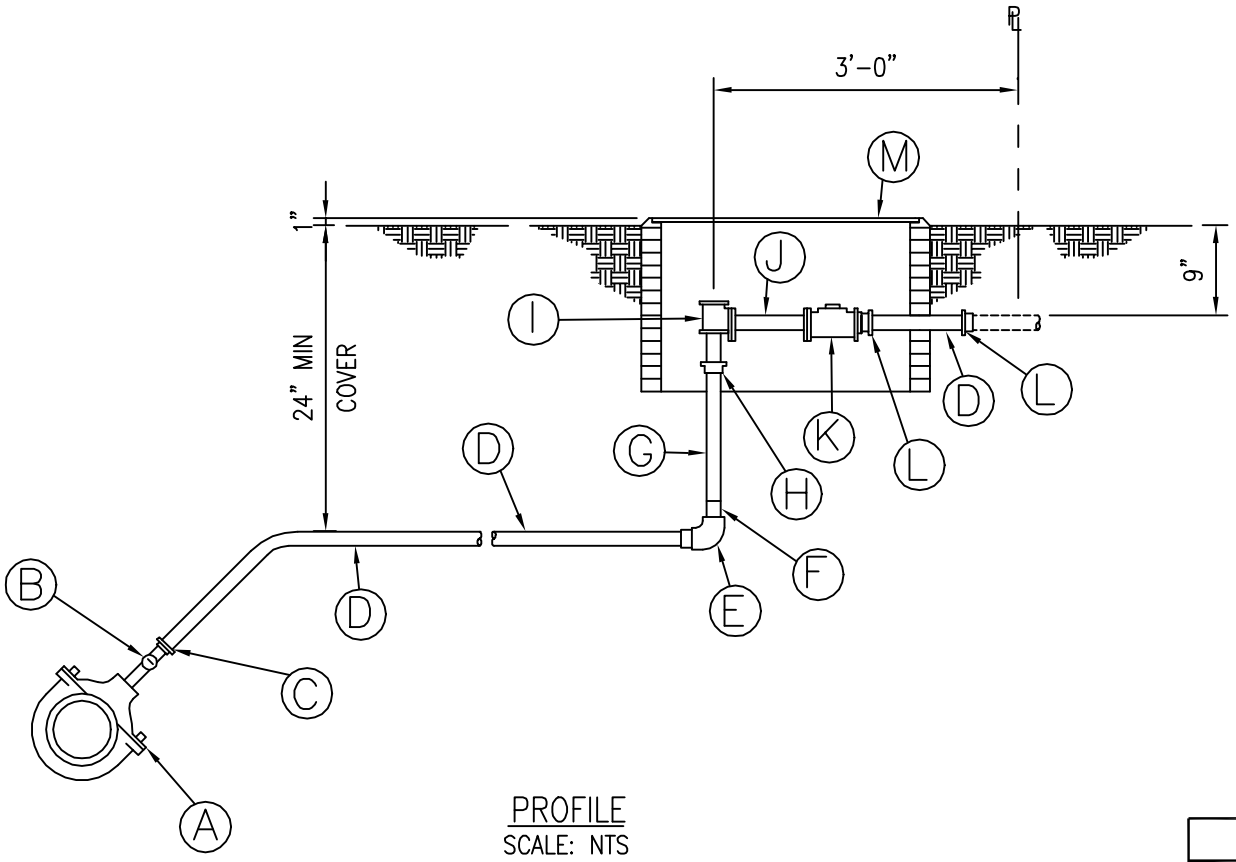

PROFILE
SCALE: NTS

BRONZE SERVICE SADDLE W/ 2" CC TAP FOR
USE C-900 PVC PIPE AND DUCTILE IRON PIPE

2002
REVISION

KAUAI	TWO-INCH METER PROFILE & MATERIAL LIST SCALE: NTS	STANDARD DETAILS	L6

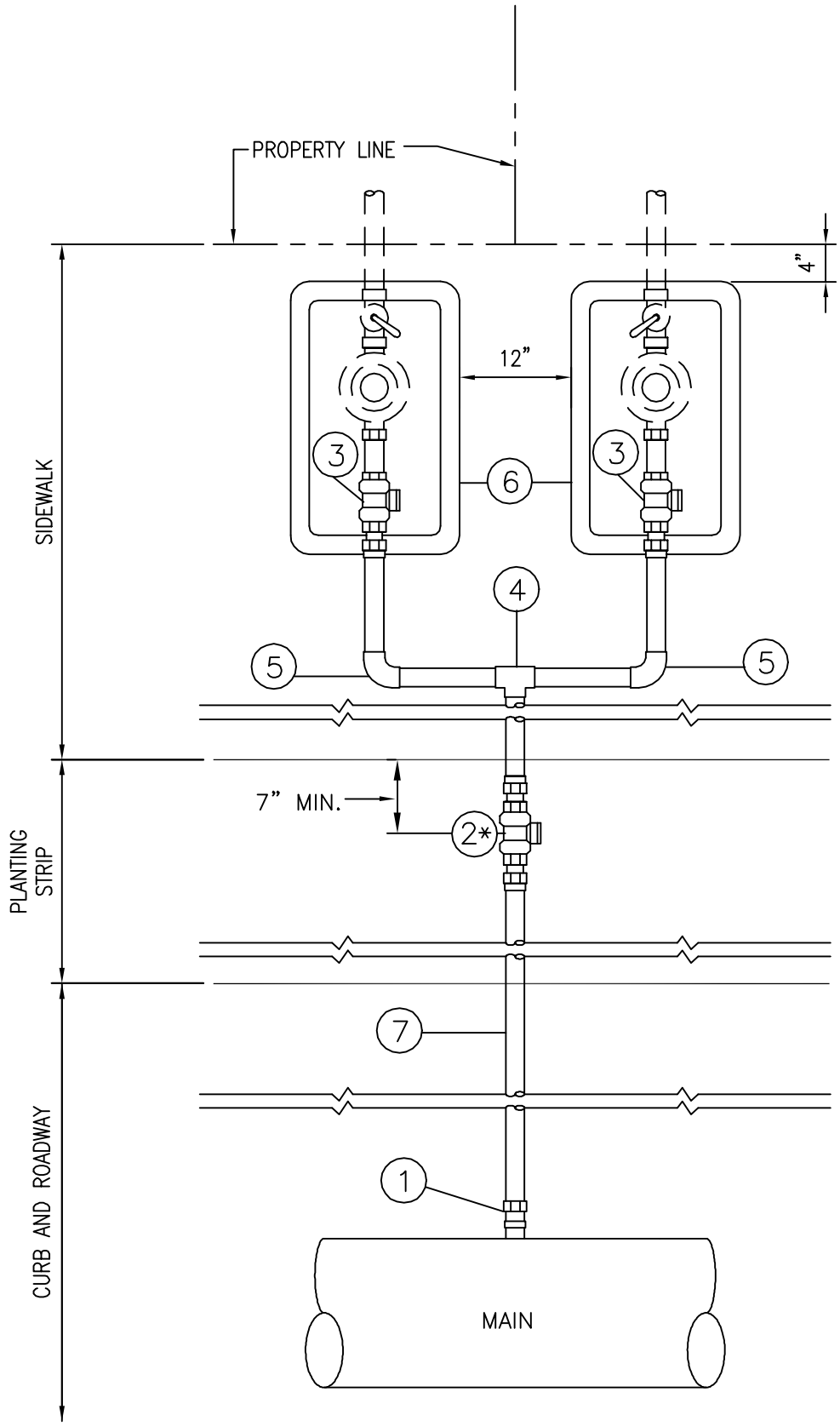

METER BOX EXCEPTION – FOR 1 1/2" TYPE "B", 1 1/2" TYPE "C", AND 1 1/2" TYPE "D" SERVICE LATERALS, INSTALL TYPE "X" METER BOXES IN A.C. AND CONCRETE PAVED AREAS. INSTALL TYPE "B" METER BOXES IN UNPAVED AREAS. CURB STOP TO BE LOCATED BELOW PLANTING STRIP. FOR CONC. SIDEWALKS W/O PLANTING STRIP, CURB STOP SHALL BE LOCATED 12" ON CENTERLINE SIDE OF CURB FACE. FOR A.C. PAVED AND STABILIZED SHOULDERS, CURB STOP SHALL BE LOCATED NEXT TO COPPER TEE, MIN. 7".

NOTE:
REFER TO L10 FOR SCHEDULE OF COPPER FITTINGS.

			2002
			REVISION
HAWAII	COPPER SERVICE LATERAL FOR MULTIPLE METERS SCALE: NTS	STANDARD DETAILS	L7

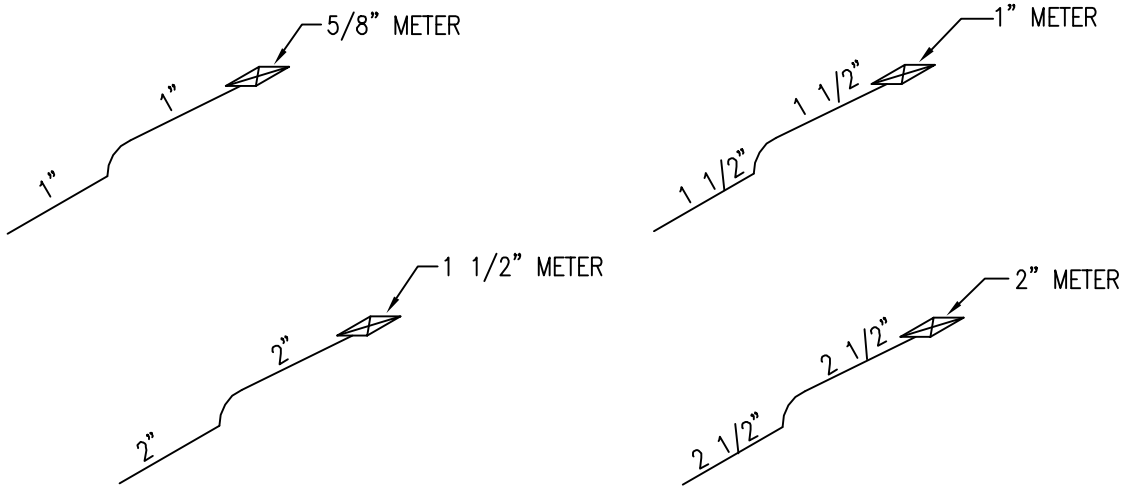

TYPE A

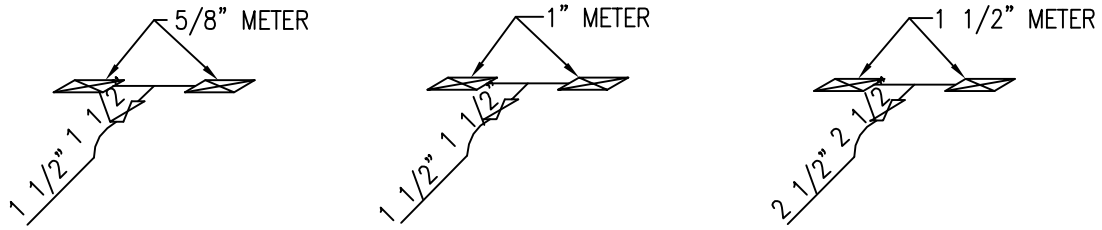

TYPE B

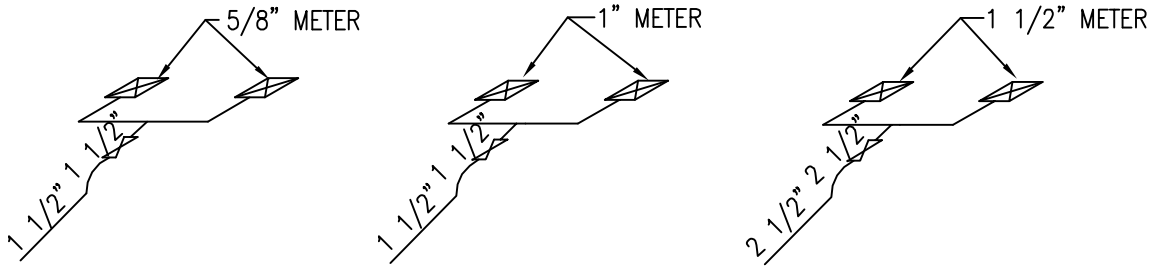

TYPE C

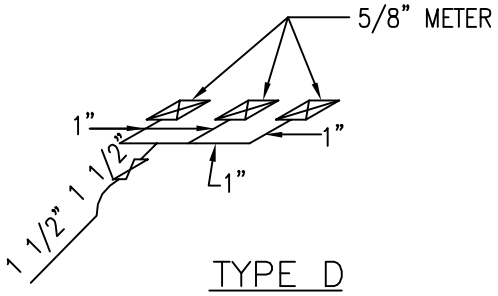

TYPE D

NOTE:
THE SIZE COMBINATIONS SHOWN ARE THOSE MOST COMMONLY USED, BUT THIS FIGURE IS NOT INTENDED TO LIMIT THE COMBINATIONS WHICH MAY BE USED. HOWEVER, COMBINATIONS OTHER THAN THESE SHOWN ABOVE MAY BE INSTALLED ONLY WITH THE APPROVAL OF THE MANAGER.

			2002
			REVISION
HAWAII	SERVICE LATERALS AND CONNECTIONS SCALE: NTS	STANDARD DETAILS	L8

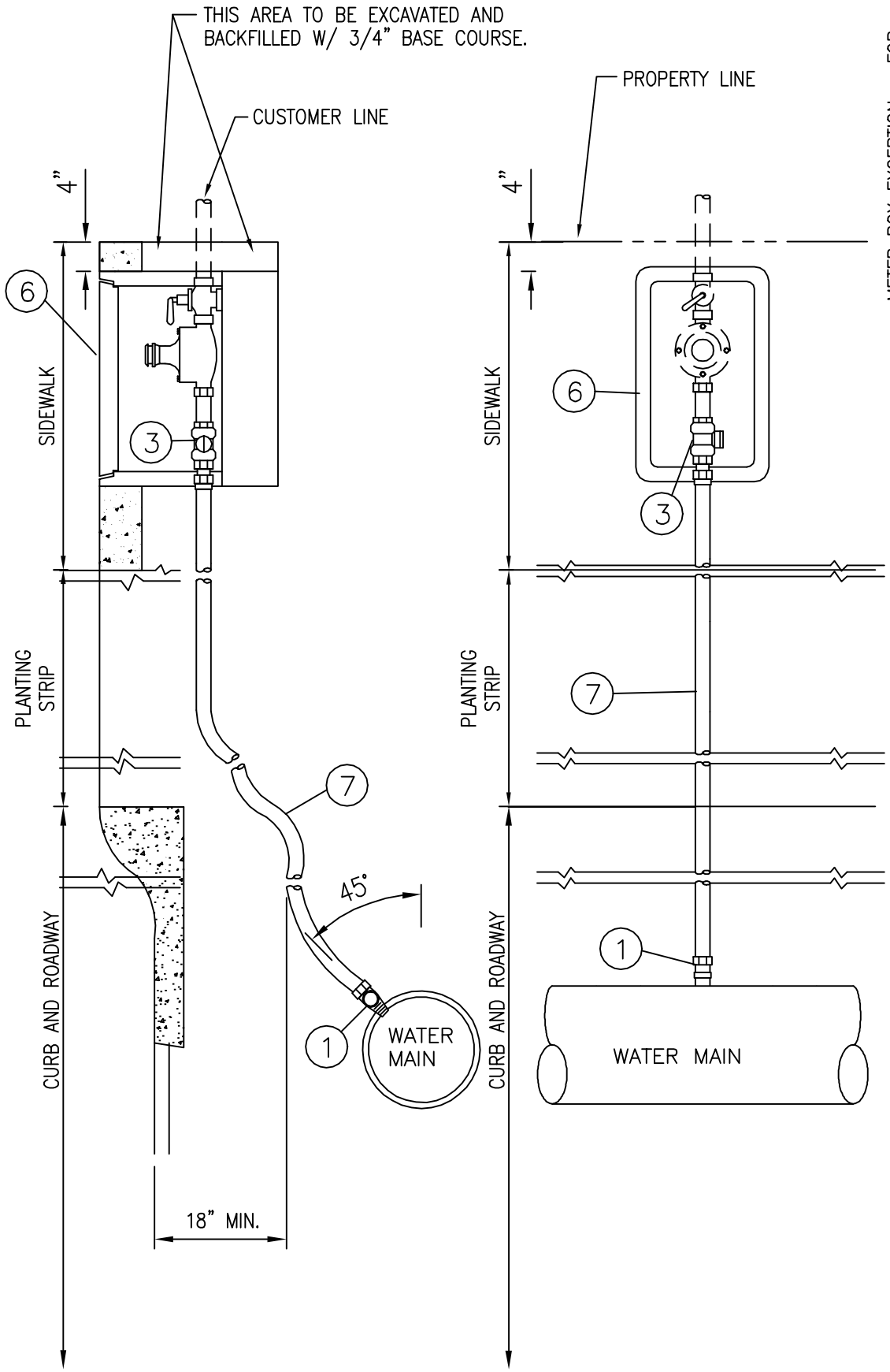

METER BOX EXCEPTION – FOR 1" TYPE "A" SERVICE LATERALS, INSTALL TYPE "X" METER BOX IN A.C. AND CONCRETE PAVED AREAS. INSTALL TYPE "B" METER BOXES IN UNPAVED AREAS.

NOTE:

REFER TO L10 FOR SCHEDULE OF COPPER FITTINGS.
FOR MULTIPLE CONNECTION, SEE L8.
FOR ASPHALTIC CONCRETE PAVED AREAS, METER BOX SHALL BE LOCATED 4" FROM THE PROPERTY LINE.
FOR NON-SIDEWALK AREAS, METER BOX SHALL BE LOCATED 12" FROM PROPERTY LINE.
FOR SERVICE SADDLE REQUIREMENTS SEE TABLE 100-15 OF THE WATER SYSTEM STANDARDS.

HAWAII	**COPPER SERVICE LATERAL** **FOR 5/8" & 1" METERS** SCALE: NTS	STANDARD DETAILS	2002 REVISION L9

HAWAII

SERVICE LATERAL/CONNECTION

MATERIAL SCHEDULE

SCALE: NTS

STANDARD DETAILS

L10

REVISION 2002

SERVICE LATERAL AND CONNECTION MATERIAL SCHEDULE

		SERVICE CONNECTION MATERIAL															
		SERVICE LATERAL MATERIAL															
		BRONZE BALL CORP. (a)		BRONZE CURB STOP (b)		BRONZE CURB STOP (c)		TEE CxCxC STYLE		90° ELBOW CxC STYLE		METER BOX	COPPER TUBING TYPE K	METER		CUSTOMER VALVE (d)	
TYPE	SIZE	SIZE	QNT.	SIZE	QNT.	SIZE	QNT.	SIZE	QNT.	SIZE	QNT.	QNT.	SIZE	SIZE	QNT.	SIZE	QNT.
A	1	1X1	1			1*	1					1	1	5/8	1	3/4	1
	1- 1/2	1-1/2X1-1/2	1			1-1/2	1					1	1- 1/2	1	1	1	1
	2	2X2	1			2	1					1	2	1- 1/2	1	1-1/2	1
	2- 1/2	2X2	1			2	1					1	2- 1/2	2	1	2	1
B	1- 1/2	1-1/2X1-1/2	1	1-1/2	1	1*	2	1 x 1 x 1-1/2	1			2	1- 1/2	5/8	2	3/4	2
	1- 1/2	1-1/2x1-1/2	1	1-1/2	1	1-1/2"	2	1-1/2X1-1/2X1-1/2	1			2	1- 1/2	1	2	1	2
	2- 1/2	2X2	1	2-1/2	1	2	2	2 X 2 X 2- 1/2	1			2	2- 1/2	1- 1/2	2	1-1/2	2
C	1- 1/2	1-1/2X1-1/2	1	1-1/2	1	1*	2	1 X 1 X 1- 1/2	1	1	2	2	1- 1/2	5/8	2	3/4	2
	1- 1/2	1-1/2x1-1/2	1	1-1/2	1	1-1/2"	2	1-1/2X1-1/2X1-1/2	1	1- 1/2	2	2	1- 1/2	1	2	1	2
	2- 1/2	2X2	1	2-1/2	1	2	2	2 X 2 X 2- 1/2	1	2	2	2	2- 1/2	1-1/2	2	1-1/2	2
D	1- 1/2	1-1/2x1-1/2	1	1-1/2	1	1*	3	1-1/2x1x1-1/2	1	1	2	3	1- 1/2	5/8	3	3/4	3
								1- 1/2 X 1 X 1	1								
ITEM NO.		1		2		3		4		5		6	7	8		9	

(a) BRONZE BALL CORP.
INLET: AWWA TAPER
OUTLET: PACK JOINT, "M.P.T. W/ADAPTER (F.P.T. x PACK JOINT)" OR
M.P.T. W/ BRASS UNION (FPT X C)

(b) BRONZE BALL CURB STOP
INLET–OUTLET: PACK JOINTS OR
FPT W/ ADAPTER (C X MPT)

(*) 1" SERVICE CONNECTION
INLET: (TO FIT 1" COPPER PIPE)
OUTLET: METER COUPLING FOR
5/8" x 3/4" METER

(c) BRONZE BALL CURB STOP
INLET: PACK JOINT
OUTLET: METER COUPLING OR FPT W/BRASS BUSHING
OR
INLET: FPT W/ ADAPTER (C X MPT)
OUTLET: FPT W/BRASS BUSHING
OR
INLET: FPT W/ ADAPTER (C X MPT)
OUTLET: FPT W/ BRASS BUSHING AND METER COUPLING.

(d) CUSTOMER VALVE: BALL VALVE WITH HAND LEVER
INLET: METER COUPLING OR FLANGE, PACK JOINT, OR FPT.
OUTLET: FPT OR PACK JOINT.

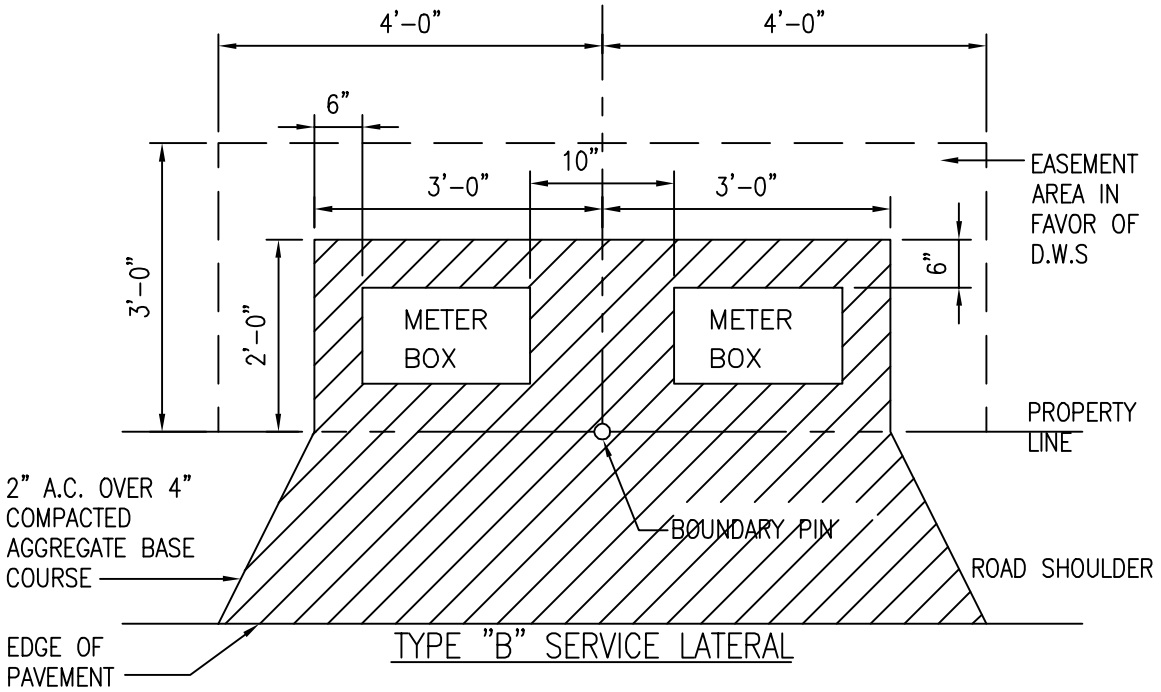

TYPE "B" SERVICE LATERAL

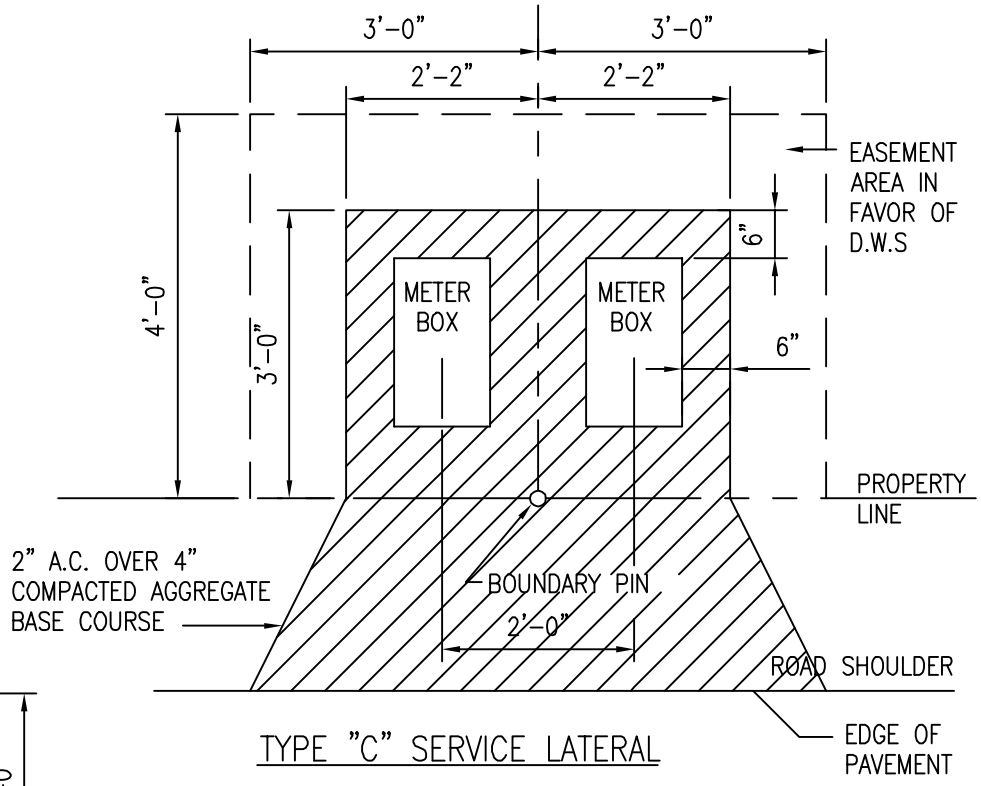

TYPE "C" SERVICE LATERAL

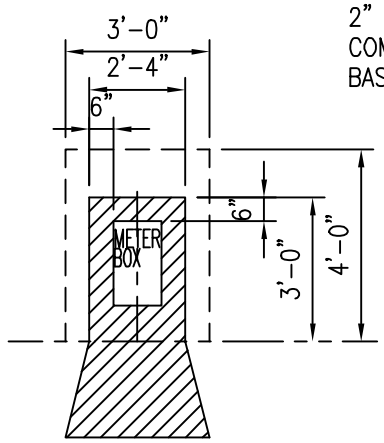

TYPE "A" SERVICE LATERAL

TYPE "X" METER BOXES SHALL BE INSTALLED

2002	
REVISION	

HAWAII	**STABILIZATION OF 5/8 INCH METER EASEMENTS** SCALE: NTS	STANDARD DETAILS	L11

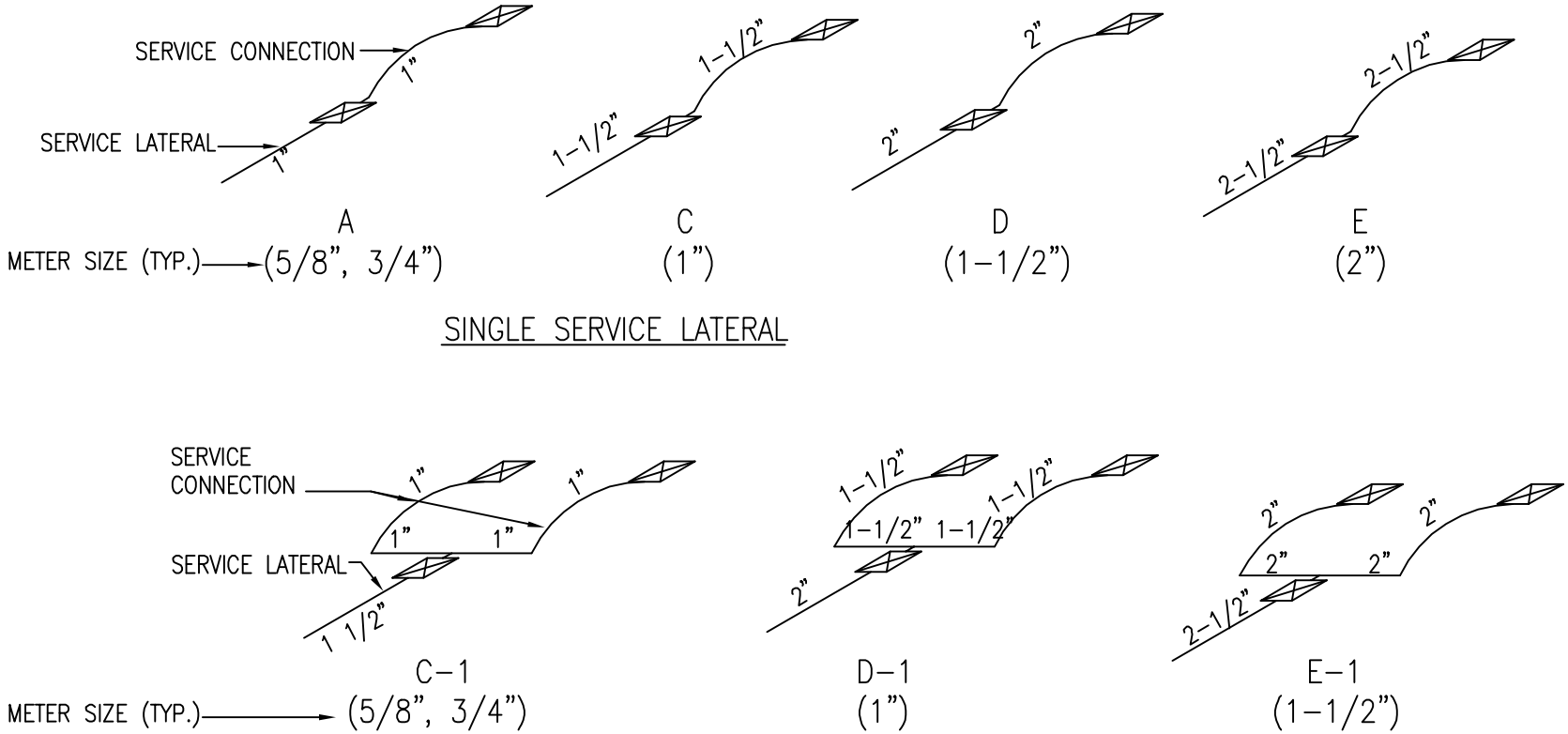

THE PURPOSE OF THIS FIGURE IS TO SIMPLIFY THE DESIGNATION OF SERVICE LATERALS AND CONNECTIONS ON CONSTRUCTION PLANS. THE SIZE COMBINATIONS SHOWN HEREON ARE THOSE MOST COMMONLY USED, BUT THIS FIGURE IS NOT INTENDED TO LIMIT THE COMBINATIONS WHICH MAY BE USED.

OAHU

SERVICE LATERALS AND CONNECTIONS STANDARD SIZING ARRANGEMENTS

SCALE: NTS

STANDARD DETAILS

L12

2002 REVISION

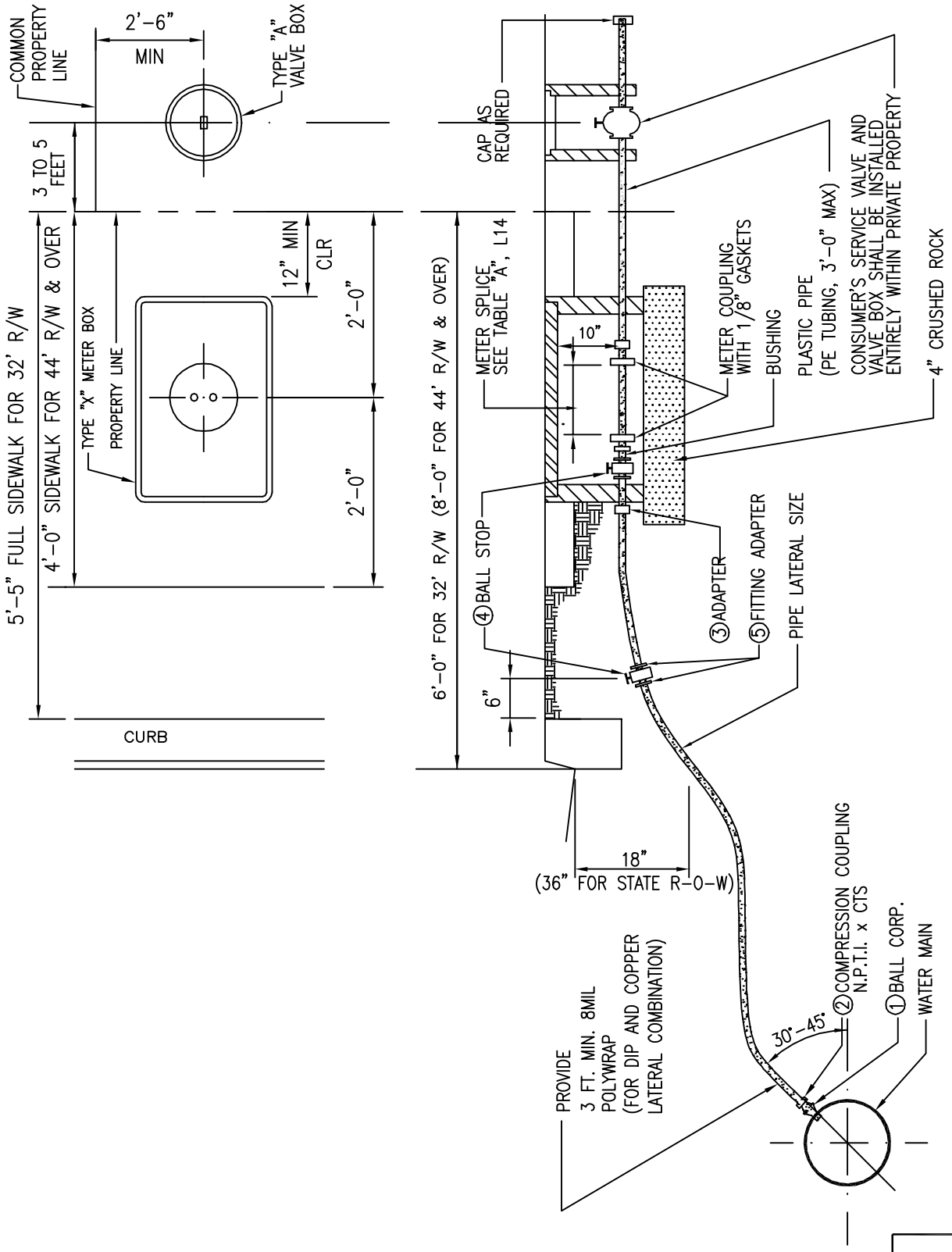

			2002
			REVISION
OAHU	COPPER SERVICE LATERAL FOR CONNECTION TYPE "X" METER BOX 5/8", 3/4", & 1" METERS SCALE: NTS	STANDARD DETAILS	L13

NOTES:

1. SEE M3 FOR DETAILS OF TYPE "X" METER BOX.
2. IF THE CONSUMER'S SERVICE VALVE CANNOT BE INSTALLED 3-5 FEET FROM THE PROPERTY LINE, THE VALVE SHALL BE INSTALLED AS DIRECTED BY THE MANAGER, OR INSTALL BALL CORP. WITHIN METER BOX AFTER METER.
3. SEE PLATE M43 FOR METER INSTALLATION IN NON-SIDEWALK AREA.

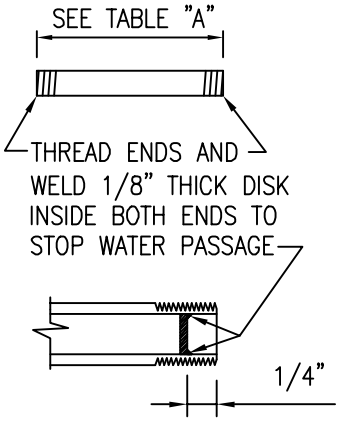

TABLE "A"		
METER SIZE	SPLICE SIZE	SPLICE LENGTH
5/8"	1" DIA.	7 1/2"
3/4"	1" DIA.	9"
1"	1 1/4" DIA.	10 3/4"

METER SPLICE DETAIL

			2002
			REVISION
OAHU	COPPER SERVICE LATERAL FOR CONNECTION TYPE "X" METER BOX 5/8", 3/4", & 1" METERS SCALE: NTS	STANDARD DETAILS	L14

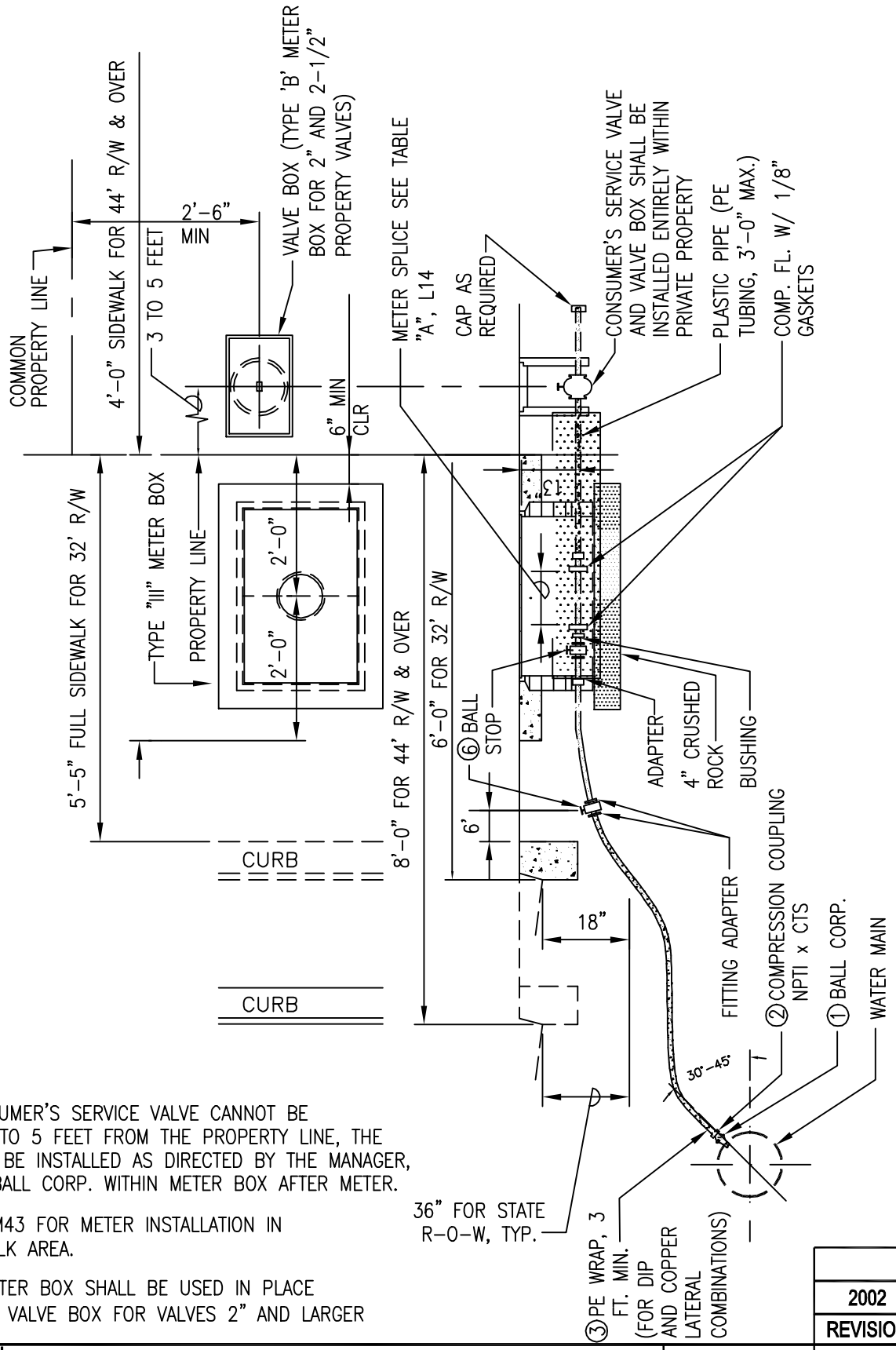

NOTES:

1. IF THE CONSUMER'S SERVICE VALVE CANNOT BE INSTALLED 3 TO 5 FEET FROM THE PROPERTY LINE, THE VALVE SHALL BE INSTALLED AS DIRECTED BY THE MANAGER, OR INSTALL BALL CORP. WITHIN METER BOX AFTER METER.
2. SEE PLATE M43 FOR METER INSTALLATION IN NON-SIDEWALK AREA.
3. TYPE "B" METER BOX SHALL BE USED IN PLACE OF TYPE "A" VALVE BOX FOR VALVES 2" AND LARGER

OAHU	COPPER SERVICE LATERAL FOR CONNECTION TYPE III METER BOX 1 1/2" AND 2" METERS SCALE: NTS	STANDARD DETAILS	2002 REVISION L15

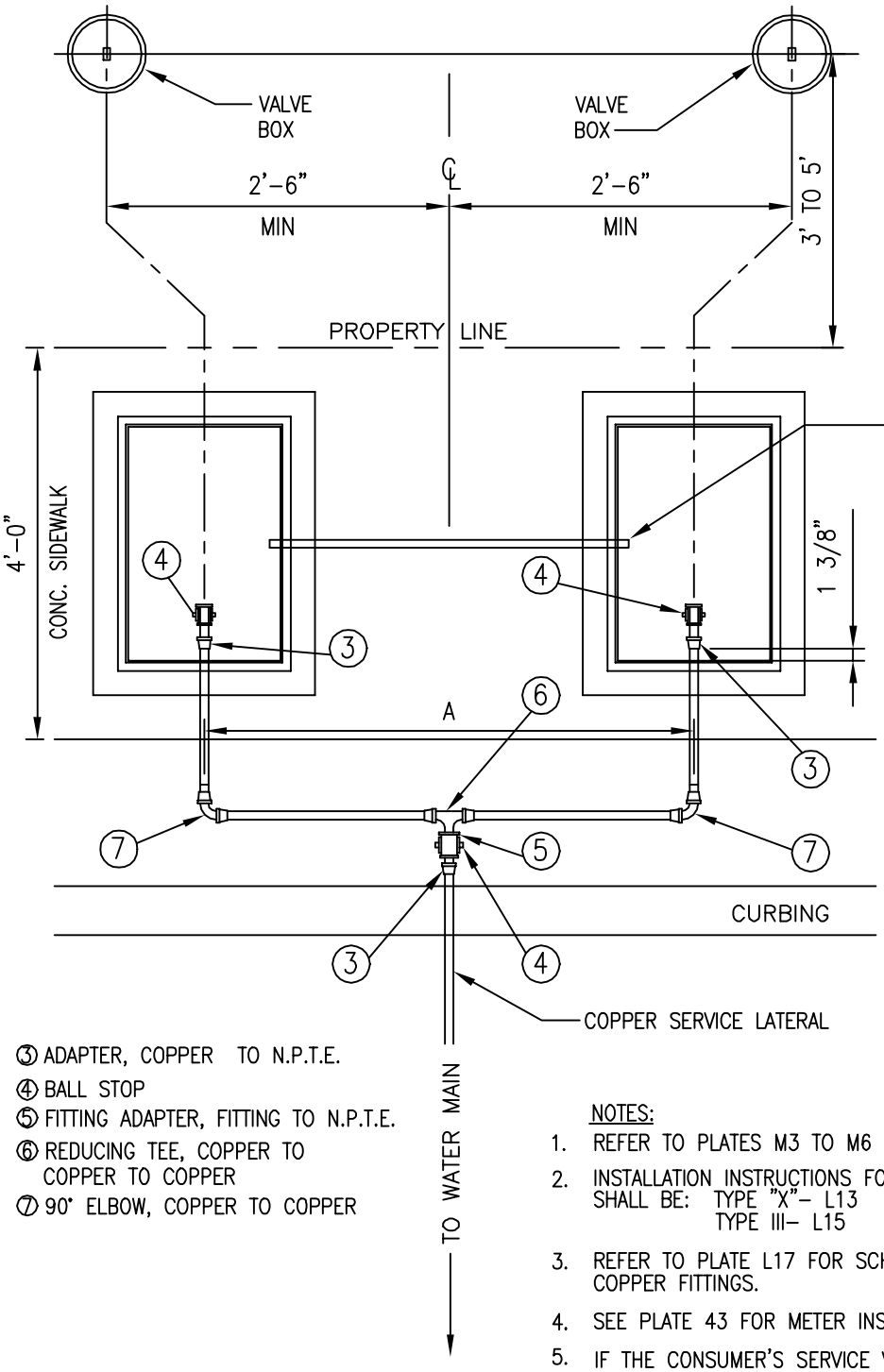

INSTALL 3/4" PVC SCHEDULE 80 CONDUIT WITH STRING UNDER THE METER BOXES, WHENEVER THE DISTANCE BETWEEN METER BOXES (2 TO 12 MULTIPLE METER BOXES) IS 4'-0" OR LESS (EDGE TO EDGE). CONDUIT SHALL EXTEND 2" WITHIN METER BOX, KEEP BOTH ENDS EXPOSED, PLUG OR TAPE TO PREVENT SOIL INTRUSION, AS REQUIRED. FOR INSTALLATION IN EXISTING SLAB, SAW CUT TRENCH, REPAIR CONCRETE WITH EPOXY MORTAR, LEVEL AND FINISH TO MATCH EXISTING.

③ ADAPTER, COPPER TO N.P.T.E.
④ BALL STOP
⑤ FITTING ADAPTER, FITTING TO N.P.T.E.
⑥ REDUCING TEE, COPPER TO COPPER TO COPPER
⑦ 90° ELBOW, COPPER TO COPPER

NOTES:

1. REFER TO PLATES M3 TO M6 FOR DETAILS OF METER BOXES.
2. INSTALLATION INSTRUCTIONS FOR METER BOXES IN SIDEWALK AREA SHALL BE: TYPE "X"– L13
   TYPE III– L15
3. REFER TO PLATE L17 FOR SCHEDULE OF COPPER FITTINGS.
4. SEE PLATE 43 FOR METER INSTALLATION IN NON–SIDEWALK AREAS.
5. IF THE CONSUMER'S SERVICE VALVE CANNOT BE INSTALLED 3 TO 5 FEET FROM THE PROPERTY LINE, THE VALVE SHALL BE INSTALLED AS DIRECTED BY THE MANAGER.

TYPE OF METER BOX	MIN. DIMENSION "A"
TYPE "X"	25"
TYPE III	29"

2002
REVISION

OAHU

COPPER SERVICE LATERAL
FOR CONNECTION (MULTIPLE SERVICE)
SCALE: NTS

STANDARD DETAILS

L16

ITEM NO.	DESCRIPTION	SINGLE SERVICE CONN.	CONNECTION FOR TWO SERVICES
1	BALL CORPORATION, BRONZE	1	1
2	GROUND JOINT UNION, COPPER TO N.P.T.I.	1	1
3	ADAPTER, COPPER TO N.P.T.E.	1	3
4	BALL STOP	2	3
5	FITTING ADAPTER, FITTING TO N.P.T.E	2	1
6	REDUCING TEE, COPPER TO COPPER TO COPPER	–	1
7	90° ELBOW, COPPER TO COPPER	–	2

NPTI= NATIONAL PIPE THREAD, INTERNAL
NPTE= NATIONAL PIPE THREAD, EXTERNAL
CTS= COPPER TUBING SIZE

SCHEDULE OF COPPER FITTINGS

2002
REVISION

OAHU

SPECIAL LATERAL AND CONNECTION
FITTING SCHEDULE
SCALE: NTS

STANDARD DETAILS

L17

OAHU

MATERIAL LIST
FOR COPPER LATERALS

SCALE: NTS

STANDARD DETAILS

L18

TABLE A (COPPER)													
METER			LOW RANGE FOR METER SIZING (GPM)	LATERAL TYPE	LATERAL SIZE	SPLICE SIZE	SPLICE LENGTH	METER COUPL'G	BRASS REDUC.	SERVICE VALVE	BRASS PIPE	CAP	METER BOX
CODE	SIZE	FLOW GPM											
02	5/8"	20	0–20	"A"	1"	1" DIA.	7 1/2"	3/4"	1"x3/4"	1"	1"x10"	1"	TYPE X
03	3/4"	30	21–30	"A"	1"	1" DIA.	9"	3/4"	1"x3/4"	1"	1"x10"	1"	TYPE X
04	1"	50	31–50	"C"	1–1/2"	1" DIA.*	10 3/4"	1"	1 1/2"x1"	1 1/2"	1 1/2"x10"	1 1/2"	TYPE X
06	1 1/2"	100	51–100	"D"	2"	1 1/2" DIA.	13" R.E.	1 1/2 FL.	NONE	1 1/2"	1 1/2"x10"	1 1/2"	TYPE III
07	2"	160	101–160	"E"	2–1/2"	2" DIA.**	17" R.E.	2" FL.	NONE	2"	2"x10"	2"	TYPE III

* INCLUDES 2–1 1/4"x 1" BUSHINGS

* * INCLUDES 2–2"x2 1/2" BUSHINGS

MAXIMUM METER SIZES FOR DOMESTIC SERVICE LATERALS		
LATERAL TYPE	MAXIMUM METER SIZE FOR SINGLE SERVICE LATERAL	MAXIMUM METER SIZES FOR COMMON SERVICE LATERAL
"A"	3/4"	NA
"C"	1"	3/4" & 3/4"
"D"	1–1/2"	1" & 1"
"E"	2"	1–1/2" & 1"

REVISION 2002

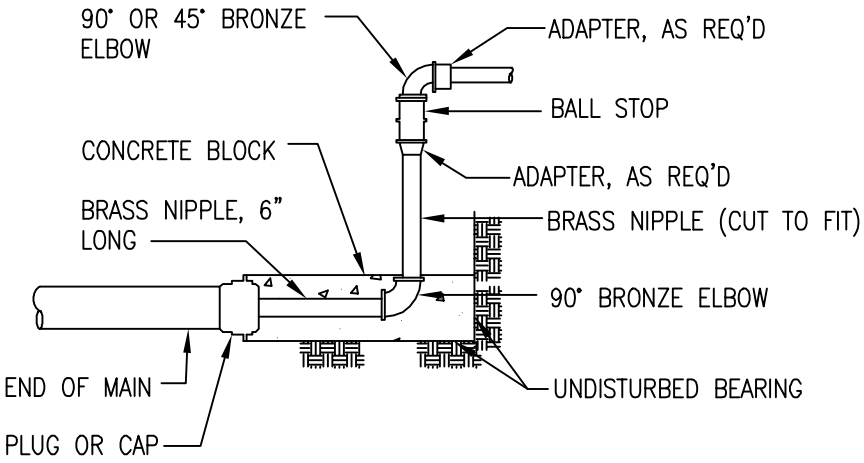

SERVICE LATERAL CONNECTION AT END OF LINE

			2002
			REVISION
OAHU	END OF LINE CONNECTION SCALE: NTS	STANDARD DETAILS	L19

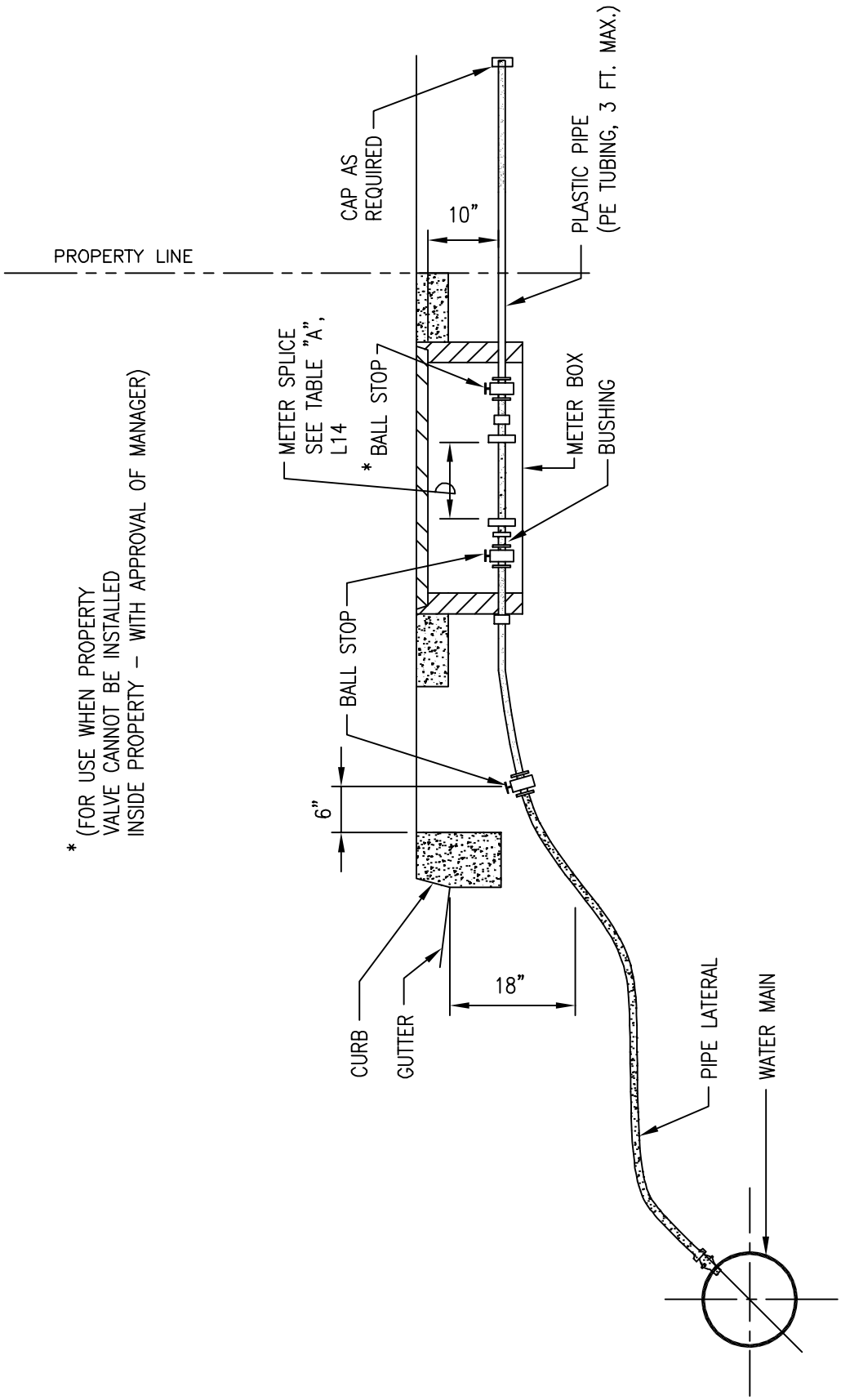

* (FOR USE WHEN PROPERTY VALVE CANNOT BE INSTALLED INSIDE PROPERTY – WITH APPROVAL OF MANAGER)

TYPICAL DETAIL FOR INSTALLATION
OF BALL STOP AFTER METER

			2002
			REVISION
OAHU	TYPICAL DETAIL FOR INSTALLATION OF BALL STOP AFTER METER SCALE: NTS	STANDARD DETAILS	L20

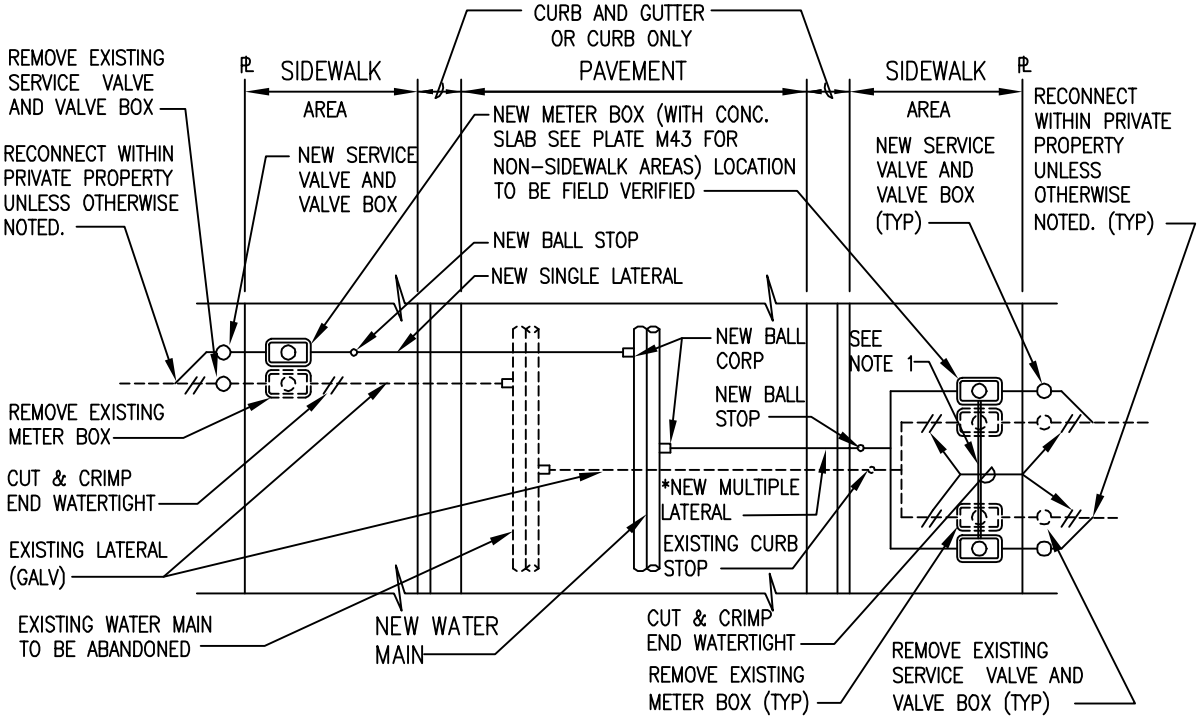

PLAN

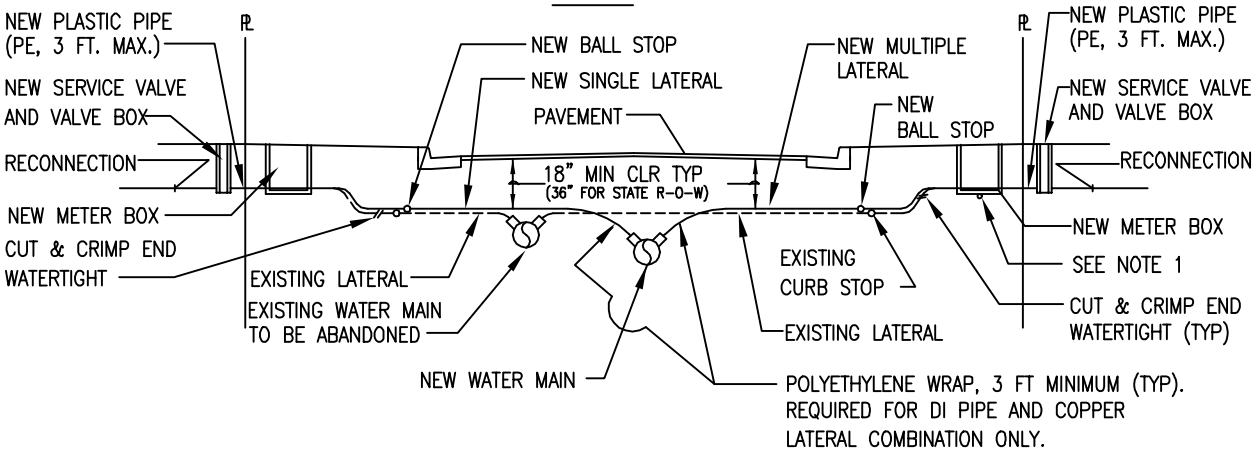

PROFILE

NOTES:

1. CONTRACTOR SHALL INSTALL A 3/4" PVC SCHEDULE 80 CONDUIT WITH STRING WHENEVER THE DISTANCE BETWEEN METER BOXES (2 TO 12 MULTIPLE METER BOXES) IS 4'-0" OR LESS (EDGE TO EDGE). CONDUIT SHALL EXTEND 2" WITHIN METER BOX, KEEP BOTH ENDS EXPOSED, PLUG OR TAPE TO PREVENT SOIL INTRUSION, AS REQUIRED. SAW CUT TRENCH AS REQUIRED AND REPAIR TO MATCH EXISTING CONDITIONS. FOR CONCRETE SLAB, REPAIR TRENCH WITH EPOXY MORTAR, LEVEL AND FINISH TO MATCH EXISTING.
2. INSTALL ELBOWS AND PIPE EXTENSIONS BEFORE METERS TO PROVIDE 18-INCH MINIMUM COVER FOR SERVICE LATERALS, AS REQUIRED.

			2002
			REVISION
OAHU	NEW LATERAL INSTALLATION SCHEMATIC DETAIL SCALE: NTS	STANDARD DETAILS	L21

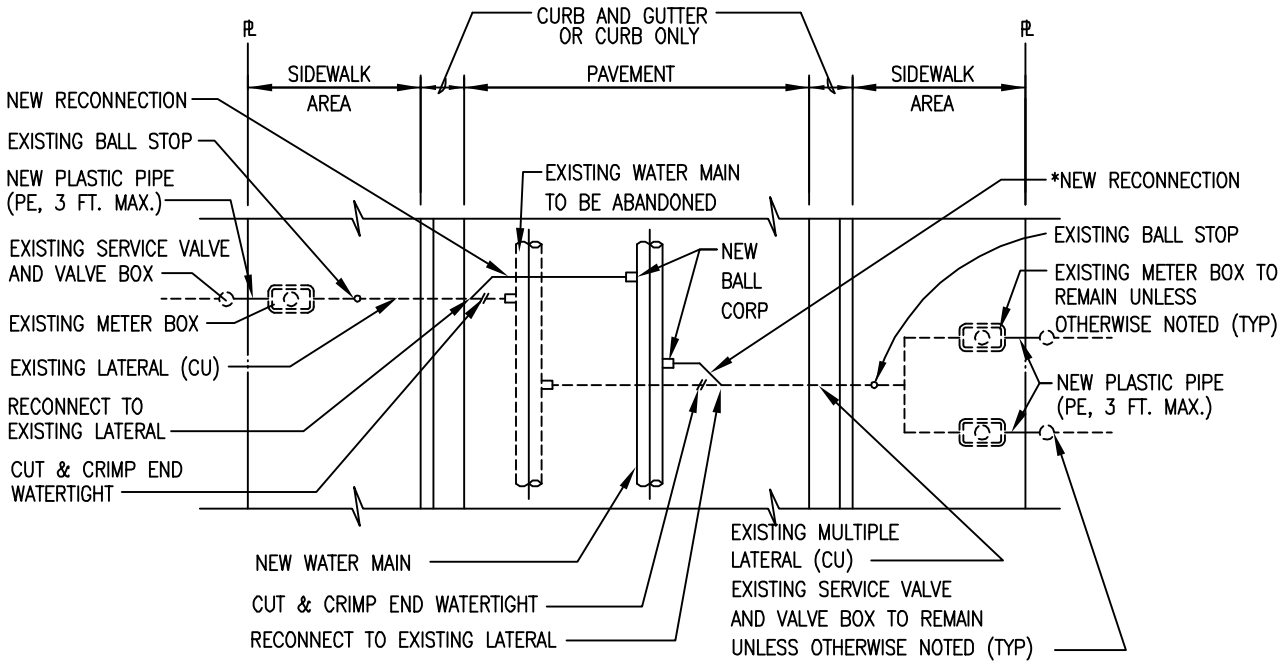

PLAN

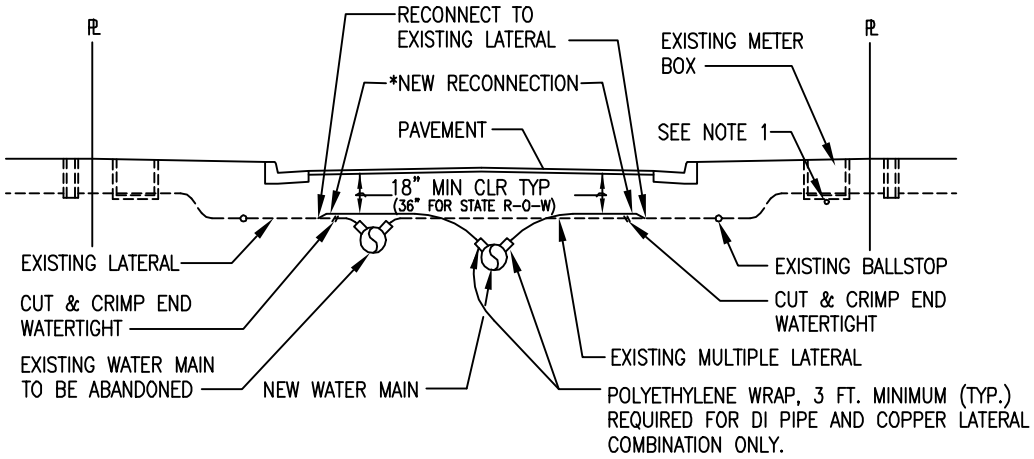

PROFILE

			2002
			REVISION
OAHU	LATERAL RECONNECTION SCHEMATIC DETAIL SCALE: NTS	STANDARD DETAILS	L22

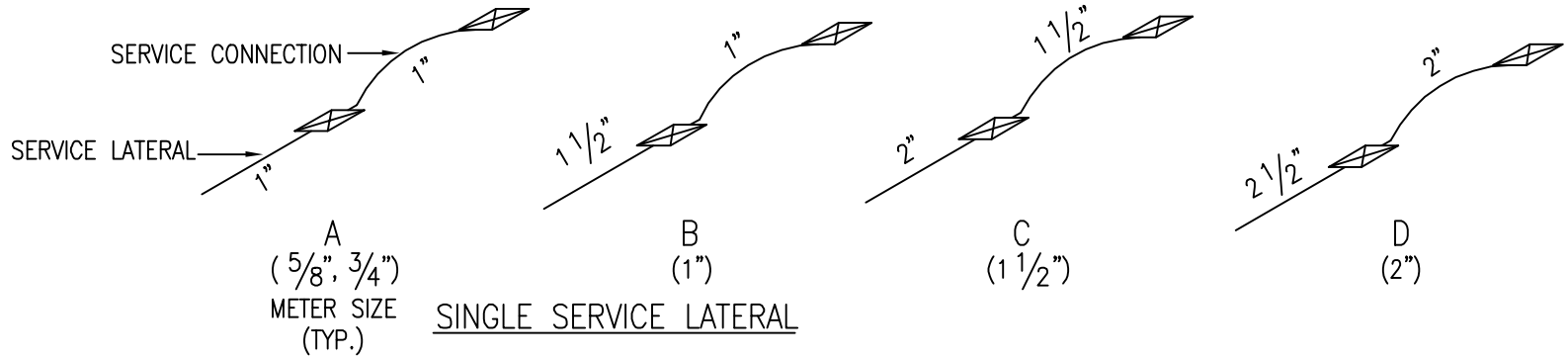

SINGLE SERVICE LATERAL

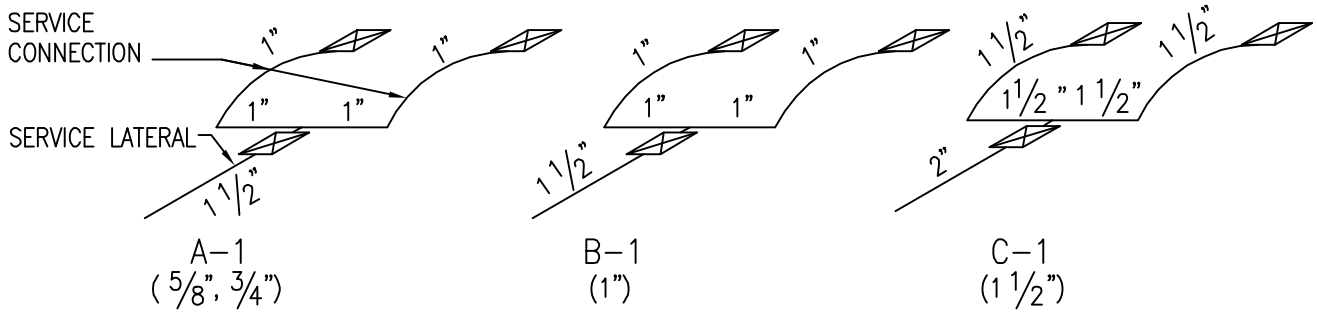

DOUBLE SERVICE LATERAL

THE PURPOSE OF THIS FIGURE IS TO SIMPLIFY THE DESIGNATION OF SERVICE LATERALS AND CONNECTIONS ON CONSTRUCTION PLANS. THE SIZE COMBINATIONS SHOWN HEREON ARE THOSE MOST COMMONLY USED, BUT THIS FIGURE IS NOT INTENDED TO LIMIT THE COMBINATIONS WHICH MAY BE USED.

MAUI

SERVICE LATERALS AND CONNECTIONS STANDARD SIZING ARRANGEMENTS

SCALE: NTS

STANDARD DETAILS

L23

2002 REVISION

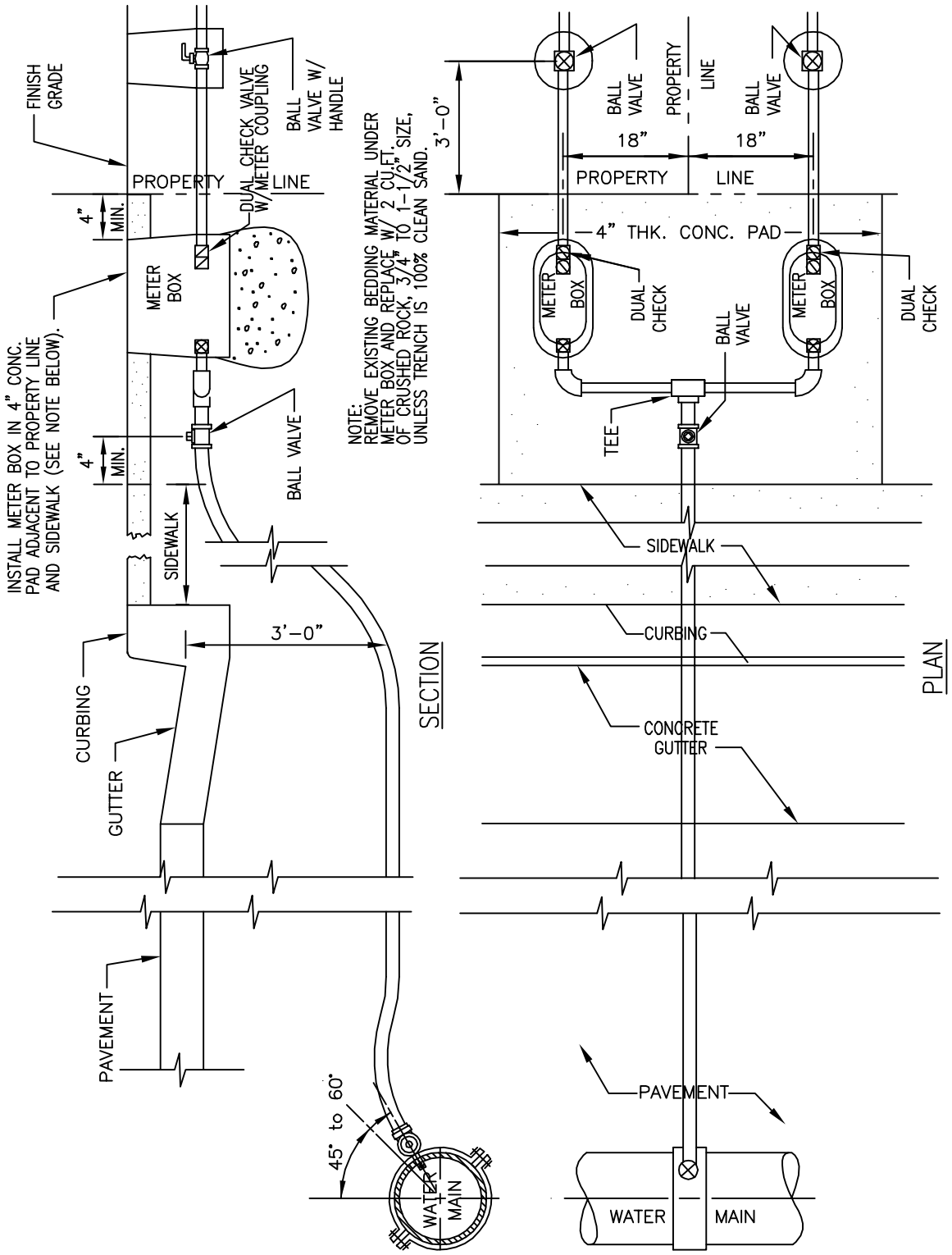

			2002
			REVISION
MAUI	TYPICAL SERVICE LATERAL SCALE: NTS	STANDARD DETAILS	L24

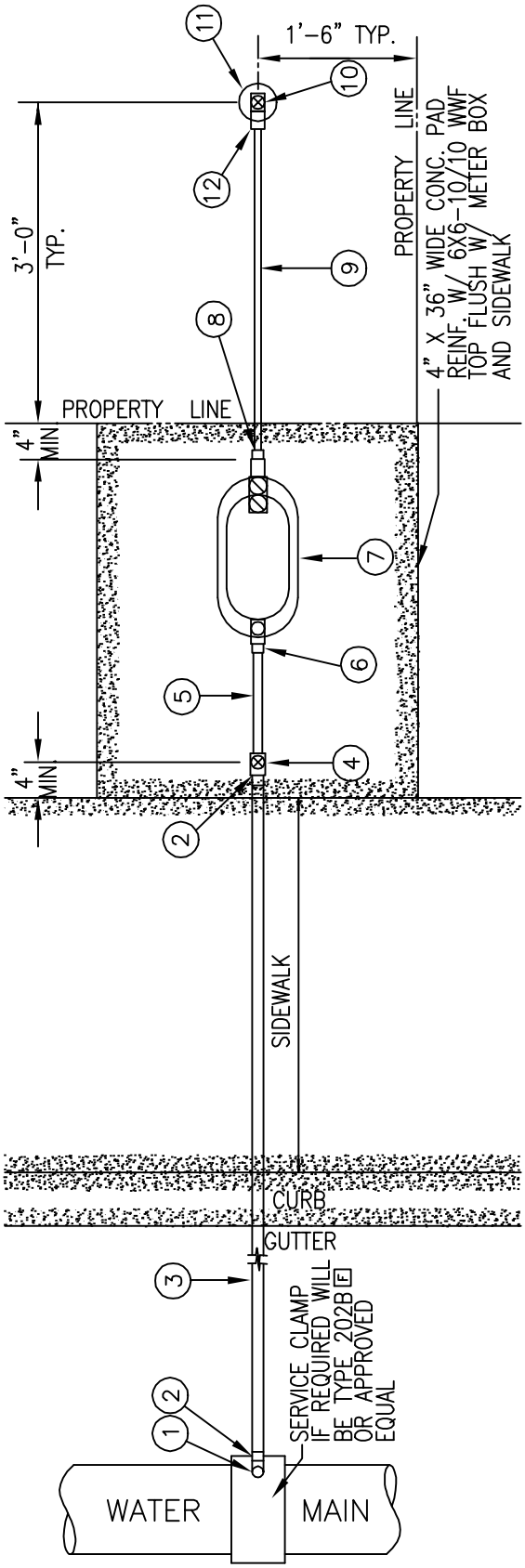

NOTE: SEE L26 FOR MATERIALS AND NOTES

MAUI	SINGLE SERVICE LATERAL TYPE "A", 5/8" & 3/4" METERS) SCALE: NTS	STANDARD DETAILS	2002 REVISION L25

TYPE	METER SIZE	1 CORP. STOP	2 COPPER ADAPTER	3 COPPER SERVICE TUBING	4 BRONZE BALL VALVE	5 BRASS NIPPLE	6 BRASS FITTING
A	5/8" x 3/4"	1" AWWA THREAD x FEMALE I.P.T. FB 1600-4 [F]	1" MALE I.P.T. x COPPER	1"	1" FEMALE I.P.T. B 11-444 [F]	1" x 4"	N/A
A	3/4" x 3/4"	1" AWWA THREAD x FEMALE I.P.T. FB 1600-4 [F]	1" MALE I.P.T. x COPPER	1"	1" FEMALE I.P.T. B 11-444 [F]	1" x 4"	1" x 45° ELBOW W/ CLOSE NIPPLE OR 45° STREET ELBOW

TYPE	METER SIZE	7 CAST IRON METER BOX	8 COPPER ADAPTER	9 COPPER SERVICE TUBING	10 BRONZE BALL VALVE	11 PLASTIC VALVE BOX	12 DIELECTRIC COUPLING
A	5/8" x 3/4"	1" FEMALE I.P.T. INLET 3/4" FEMALE I.P.T. OUTLET LYLB 111-243-TP (METER SHUTOFF AND DUAL CHECK VALVE INCLUDED) [F]	3/4" MALE I.P.T. x COPPER	3/4"	3/4" FEMALE I.P.T. B 11-333 HB-34S [F]	10" AMETEK 10-181-014 W/ GREEN COVER 10-181-015	3/4 BRASS W/ CLOSE NIPPLE
A	3/4" x 3/4"	1" FEMALE I.P.T. INLET 3/4" FEMALE I.P.T. OUTLET LYLB 211-343-TP (METER SHUTOFF AND DUAL CHECK VALVE INCLUDED) [F]	3/4" MALE I.P.T. x COPPER	3/4"	3/4" FEMALE I.P.T. B 11-333 HB-34S [F]	10" AMETEK 10-181-014 W/ GREEN COVER 10-181-015	3/4 BRASS W/ CLOSE NIPPLE

[F] DENOTES FORD METER BOX MANUFACTURING CO. NUMBER.

NOTES

1. ALL FITTINGS AND MATERIALS SHALL BE AS LISTED BY BRAND NAME OR APPROVED EQUAL.
   FOR CONDITION OTHER THAN STANDARD CONDITION SHOWN, ENGINEER SHALL SUBMIT MODIFIED DETAIL FOR APPROVAL.
2. SEE L25 FOR PLAN VIEW
3. WHERE THERE IS NO SIDEWALK, THE 4" CONCRETE PAD SHALL MEASURE 42" FRONT-TO-BACK AND 36" ALONG THE PROPERTY LINE, WITH TOP ELEVATION 2" ABOVE THE GRADED SHOULDER.
4. REPLACE PLASTIC VALVE BOX WITH CAST IRON FRAME & COVER IF SUBJECT TO TRAFFIC.

MAUI

SINGLE SERVICE LATERAL
(TYPE "A", 5/8" & 3/4" METERS)

SCALE: NTS

STANDARD DETAILS

L26

REVISION 2002

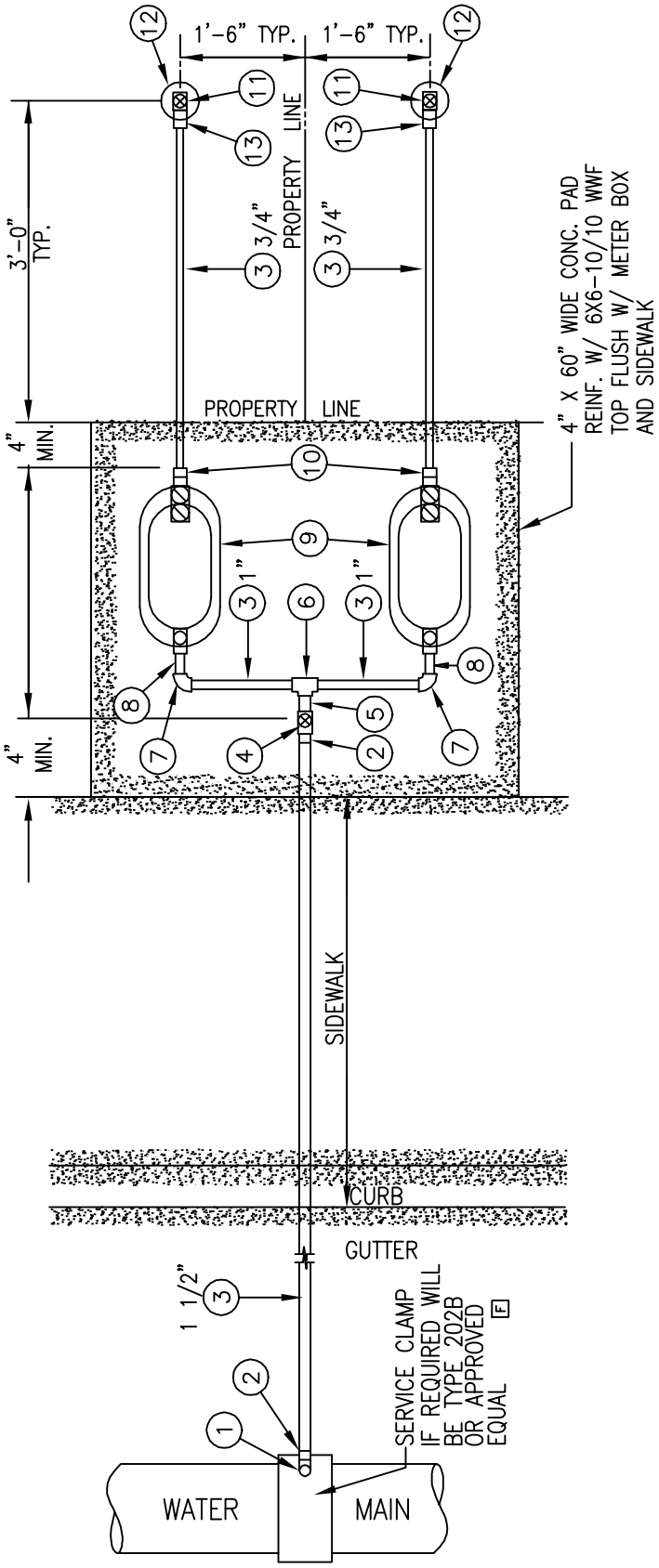

NOTE: SEE L28 FOR MATERIALS AND NOTES

			2002
			REVISION
MAUI	DOUBLE SERVICE LATERAL (TYPE "A-1", 5/8" & 3/4" METERS) SCALE: NTS	STANDARD DETAILS	L27

TYPE	METER SIZE	1 BALL STOP CORP.	2 COPPER ADAPTER	3 COPPER SERVICE TUBING	4 BRONZE BALL VALVE	5 COPPER ADAPTER	6 COPPER TEE
A-1	5/8" x 3/4"	1 1/2" AWWA THREAD x FEMALE I.P.T. FB 1600-6 F	1 1/2" MALE I.P.T. x COPPER	SIZES AS NOTED ON L27	1 1/2" FEMALE I.P.T. B 11-666 F	1 1/2" MALE I.P.T. x COPPER (SPIGOT)	1" x 1" x 1 1/2" C x C x C
A-1	3/4" x 3/4"	1 1/2" AWWA THREAD x FEMALE I.P.T. FB 1600-6 F	1 1/2" MALE I.P.T. x COPPER	SIZES AS NOTED ON L27	1 1/2" FEMALE I.P.T. B 11-666 F	1 1/2" MALE I.P.T. x COPPER (SPIGOT)	1" x 1" x 1 1/2" C x C x C

TYPE	METER SIZE	7 COPPER 90° ELLS	8 COPPER ADAPTER	9 CAST IRON METER BOX	10 COPPER ADAPTER	11 BRONZE BALL VALVE	12 PLASTIC VALVE BOX	13 DIELECTRIC COUPLING
A-1	5/8" x 3/4"	1" C x C	1" MALE I.P.T. x COPPER (SPIGOT)	1" FEMALE I,P,T, INLET 3/4" FEMALE I.P.T. OUTLET LYLB 111-243-TP (METER SHUTOFF AND DUAL CHECK VALVE INCLUDED) F	3/4" MALE I.P.T. x COPPER	3/4" FEMALE I.P.T. B 11-333 HB-34S F	10" AMETEK 10-181-014 W/ GREEN COVER 10-181-015	3/4 BRASS WITH CLOSE NIPPLE
A-1	3/4" x 3/4"	1" C x C (ROTATED 45°)	1" MALE I.P.T. x COPPER (SPIGOT)	1" FEMALE I,P,T, INLET 3/4" FEMALE I.P.T. OUTLET LYLB 211-343-TP (METER SHUTOFF AND DUAL CHECK VALVE INCLUDED) F	3/4" MALE I.P.T. x COPPER	3/4" FEMALE I.P.T. B 11-333 HB-34S F	10" AMETEK 10-181-014 W/ GREEN COVER 10-181-015	3/4 BRASS WITH CLOSE NIPPLE

F DENOTES FORD METER BOX MANUFACTURING CO. NUMBER.

NOTES

1. ALL FITTINGS AND MATERIALS SHALL BE AS LISTED BY BRAND NAME OR APPROVED EQUAL.
   FOR CONDITION OTHER THAN STANDARD CONDITION SHOWN, ENGINEER SHALL SUBMIT MODIFIED DETAIL FOR APPROVAL.
2. SEE L27 FOR PLAN VIEW
3. WHERE THERE IS NO SIDEWALK, THE 4" CONCRETE PAD SHALL MEASURE 42" FRONT-TO-BACK AND 60" ALONG THE PROPERTY LINE, WITH TOP ELEVATION 2" ABOVE THE GRADED SHOULDER.
4. REPLACE PLASTIC VALVE BOX WITH CAST IRON FRAME & COVER IF SUBJECT TO TRAFFIC.

MAUI

DOUBLE SERVICE LATERAL
(TYPE "A-1", 5/8" & 3/4" METERS)
SCALE: NTS

STANDARD DETAILS

L28

2002 REVISION

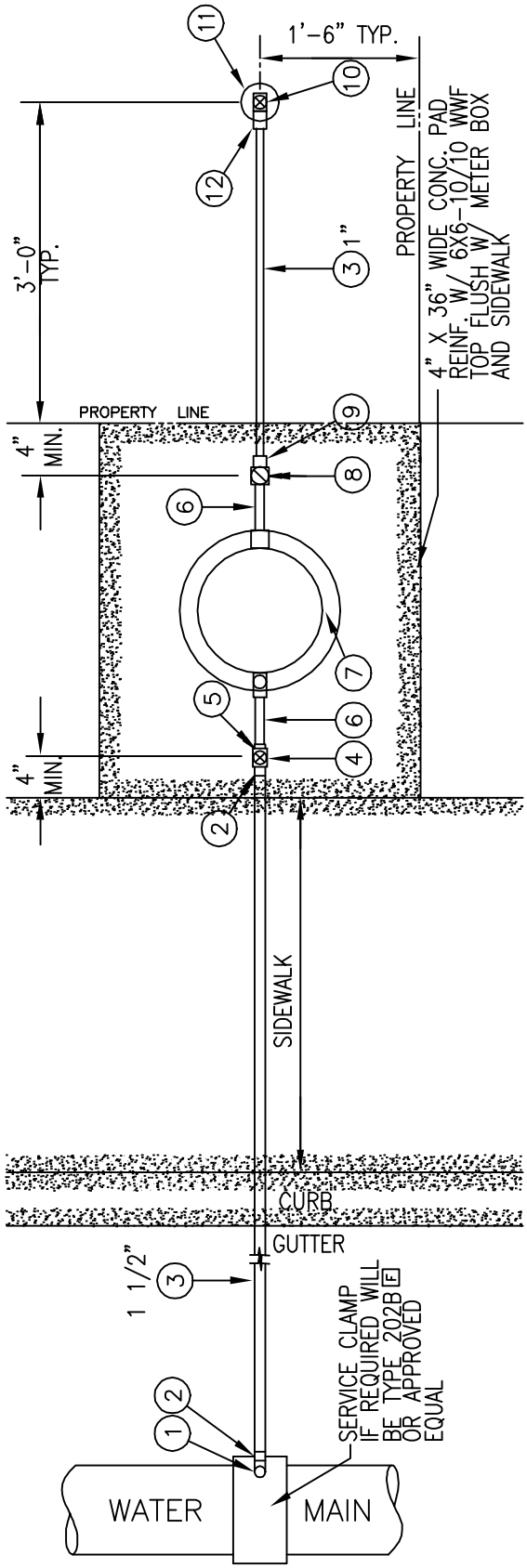

NOTE: SEE L30 FOR MATERIALS AND NOTES

			2002
			REVISION
MAUI	SINGLE SERVICE LATERAL (TYPE "B", 1" METER) SCALE: NTS	STANDARD DETAILS	L29

TYPE	METER SIZE	1 CORP. STOP	2 COPPER ADAPTER	3 COPPER SERVICE TUBING	4 BRONZE BALL VALVE	5 BRASS BUSHING	6 BRASS NIPPLE	7 CAST IRON METER BOX
B	1"	1 1/2" AWWA THREAD x FEMALE I.P.T. FB 1600-6 F	1 1/2" MALE I.P.T. x COPPER	SIZES AS NOTED ON L29	1 1/2" FEMALE I.P.T. B 11-666 F	1" FEMALE I.P.T. x 1 1/2" MALE I.P.T. C 18-46 F	1" x 4"	INLET-OUTLET 1" FEMALE I.P.T. (METER SHUTOFF INCLUDED) YLB 111-444-TP F

TYPE	METER SIZE	8 BRASS CHECK VALVE	9 COPPER ADAPTER	10 BRONZE BALL VALVE	11 PLASTIC VALVE BOX	12 DIELECTRIC COUPLING
B	1"	1" IN-LINE SPRING HS 11-444 F	1" MALE I.P.T. x COPPER	1" FEMALE I.P.T. B 11-444 HB-34S F	10" AMETEK 10-181-014 W/ GREEN COVER 10-181-015	1" BRASS WITH CLOSE NIPPLE

F DENOTES FORD METER BOX MANUFACTURING CO. NUMBER.

NOTES

1. ALL FITTINGS AND MATERIALS SHALL BE AS LISTED BY BRAND NAME OR APPROVED EQUAL. FOR CONDITION OTHER THAN STANDARD CONDITION SHOWN, ENGINEER SHALL SUBMIT MODIFIED DETAIL FOR APPROVAL.
2. SEE L29 FOR PLAN VIEW
3. WHERE THERE IS NO SIDEWALK, THE 4" CONCRETE PAD SHALL MEASURE 42" FRONT-TO-BACK AND 36" ALONG THE PROPERTY LINE, WITH TOP ELEVATION 2" ABOVE THE GRADED SHOULDER.
4. REPLACE PLASTIC VALVE BOX WITH CAST IRON FRAME & COVER IF SUBJECT TO TRAFFIC.

MAUI

SINGLE SERVICE LATERAL (TYPE "B", 1" METER)

SCALE: NTS

STANDARD DETAILS

L30

REVISION 2002

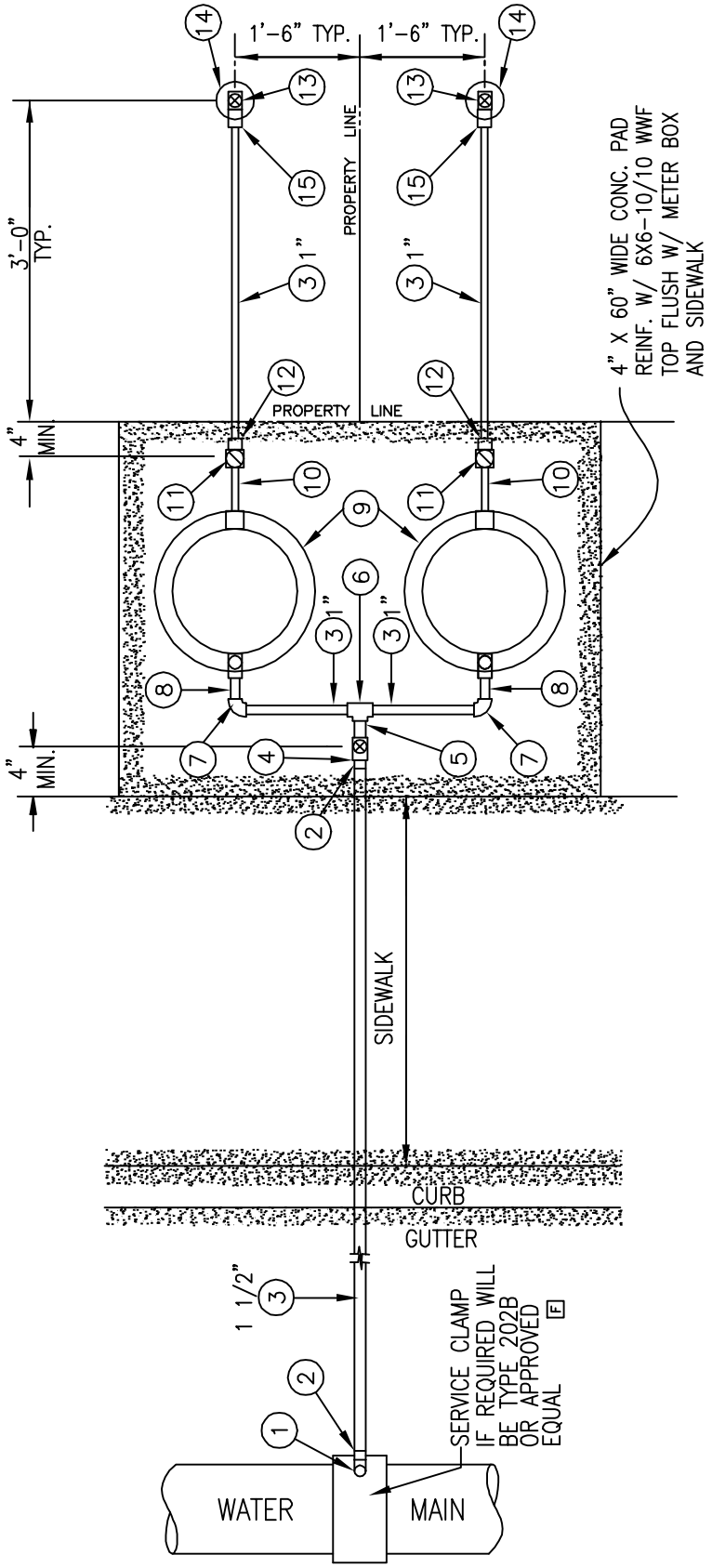

NOTE: SEE L32 FOR MATERIALS AND NOTES.

MAUI	**DOUBLE SERVICE LATERAL** (TYPE "B-1", 1" METER) SCALE: NTS	STANDARD DETAILS	2002 REVISION L31

TYPE	METER SIZE	1 CORP. STOP	2 COPPER ADAPTER	3 COPPER SERVICE TUBING	4 BRONZE BALL VALVE	5 COPPER ADAPTER	6 COPPER TEE	7 COPPER 90° ELLS
B–1	1"	1 1/2" AWWA THREAD x FEMALE I.P.T. FB 1600–6 [F]	1 1/2" MALE I.P.T. x COPPER	SIZES AS NOTED ON L31	1 1/2" FEMALE I.P.T. B 11–666 [F]	1 1/2" MALE I.P.T. x COPPER (SPIGOT)	1" x 1" x 1 1/2" C x C x C	1" C x C

TYPE	METER SIZE	8 COPPER ADAPTER	9 CAST IRON METER BOX	10 BRASS NIPPLE	11 BRASS CHECK VALVE	12 COPPER ADAPTER	13 BRONZE BALL VALVE	14 PLASTIC VALVE BOX	15 DIELECTRIC COUPLING
B–1	1"	1" MALE I.P.T. x COPPER (SPIGOT)	INLET–OUTLET 1" FEMALE I.P.T. (METER SHUT–OFF INCLUDED) YLB 111–444–TP	1" x 4"	1" IN–LINE SPRING HS 11–444 [F]	1" MALE I.P.T. x COPPER	1" FEMALE I.P.T B 11–444 HB–34S	10" AMETEK 10–181–014 W/ GREEN COVER 10–181–015	1" BRASS WITH CLOSE NIPPLE

NOTES

1. ALL FITTINGS AND MATERIALS SHALL BE AS LISTED BY BRAND NAME OR APPROVED EQUAL.
   FOR CONDITION OTHER THAN STANDARD CONDITION SHOWN, ENGINEER SHALL SUBMIT MODIFIED DETAIL FOR APPROVAL.
2. SEE L31 FOR PLAN VIEW
3. WHERE THERE IS NO SIDEWALK, THE 4" CONCRETE PAD SHALL MEASURE 42" FRONT–TO–BACK AND 60" ALONG THE PROPERTY LINE, WITH TOP ELEVATION 2" ABOVE THE GRADED SHOULDER.
4. REPLACE PLASTIC VALVE BOX WITH CAST IRON FRAME & COVER IF SUBJECT TO TRAFFIC.

[F] DENOTES FORD METER BOX MANUFACTURING CO. NUMBER.

MAUI

DOUBLE SERVICE LATERAL

(TYPE "B-1", 1" METER)

SCALE: NTS

STANDARD DETAILS

L32

REVISION 2002

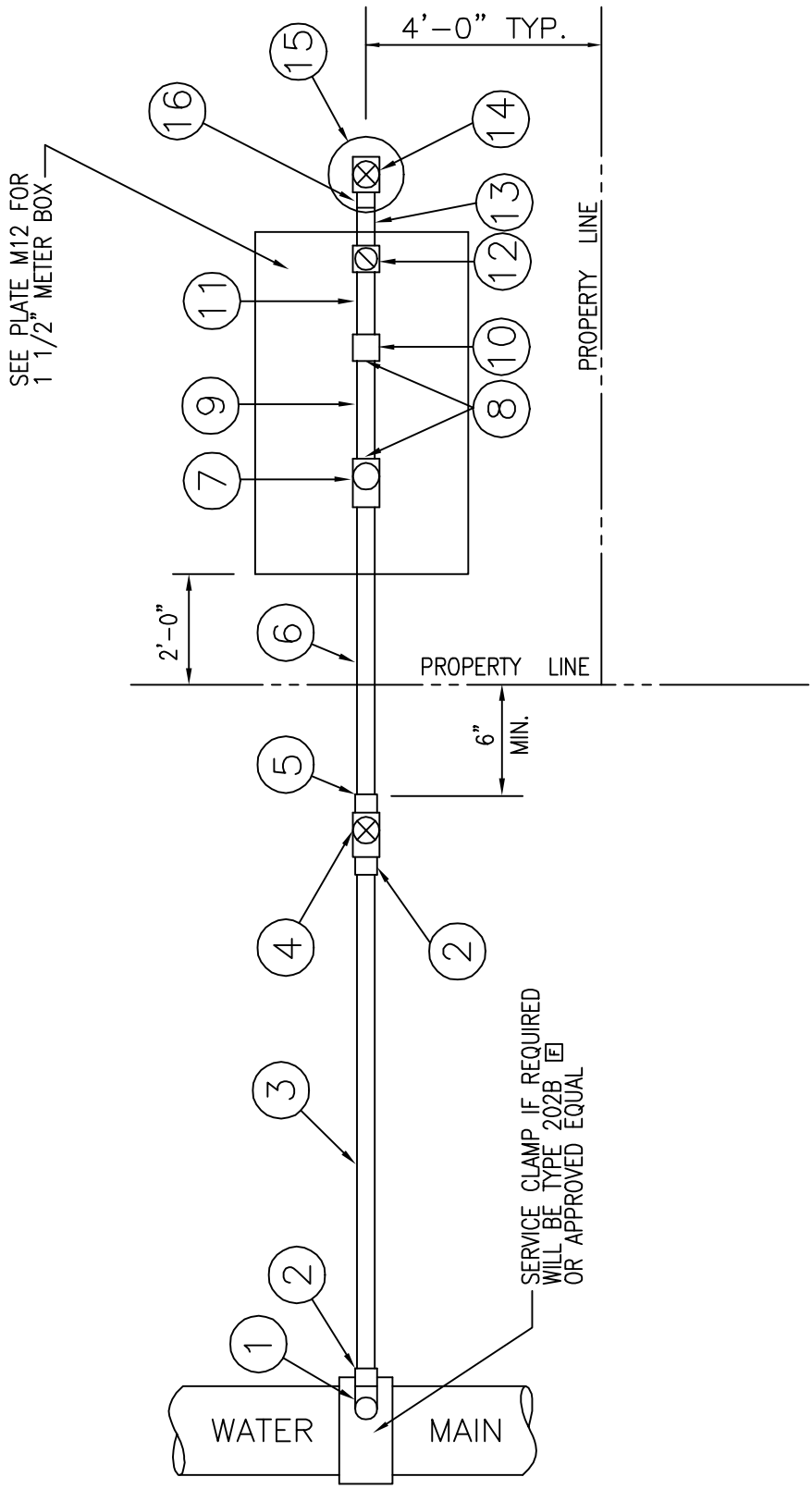

NOTE: SEE L34 FOR MATERIALS AND NOTES

			2002
			REVISION
MAUI	**SINGLE SERVICE LATERAL** (TYPE "C", 1 1/2" METER) SCALE: NTS	STANDARD DETAILS	L33

TYPE	METER SIZE	1 CORP. STOP	2 COPPER ADAPTER	3 COPPER SERVICE TUBING	4 BRONZE BALL VALVE	5 BRASS BUSHING	6 BRASS NIPPLE	7 METER VALVE	8 STAINLESS STL. BOLTS/NUTS
C	1 1/2"	2" AWWA THREAD x FEMALE I.P.T. FB 1600-7 F	2" MALE I.P.T. x COPPER	2"	2" FEMALE I.P.T. B 11-777 F	1 1/2" FEMALE I.P.T. x 2" MALE I.P.T. C 18-67 F	1 1/2" x 48" (OR LENGTH TO FIT)	1 1/2" FEMALE I.P.T. x FLANGE BF 13-666 F	5/8" x 2 1/2" TYPE 304

TYPE	METER SIZE	9 METER IDLER	10 METER COUPLING	11 BRASS NIPPLE	12 BRASS CHECK VALVE	13 BRASS NIPPLE	14 BRONZE BALL VALVE	15 PLASTIC VALVE BOX	16 DIELECTRIC COUPLING
C	1 1/2"	1 1/2" x 13" FLG. x FLG. ONE END PLUGGED	1 1/2" FLG. x LOK-PAK F	1 1/2" x 6"	1 1/2" IN-LINE SPRING HS 11-666 F	1 1/2" x 14"	1 1/2" FEMALE I.P.T. B 11-666 HB-67S F	10" AMETEK 10-181-014 W/ GREEN COVER 10-181-015	1 1/2" BRASS WITH ADAPTER AND CLOSE NIPPLE

NOTES:

1. ALL FITTINGS AND MATERIALS LISTED BY BRAND NAMES OR APPROVED EQUAL.
2. SEE PLATE M23 FOR TRANSPONDER BRACKET INSTALLATION.
3. SEE L33 FOR PLAN VIEW

F DENOTES FORD METER BOX MANUFACTURING CO. NUMBER.

MAUI

SINGLE SERVICE LATERAL

(TYPE "C", 1 1/2" METER)

SCALE: NTS

STANDARD DETAILS

L34

2002 REVISION

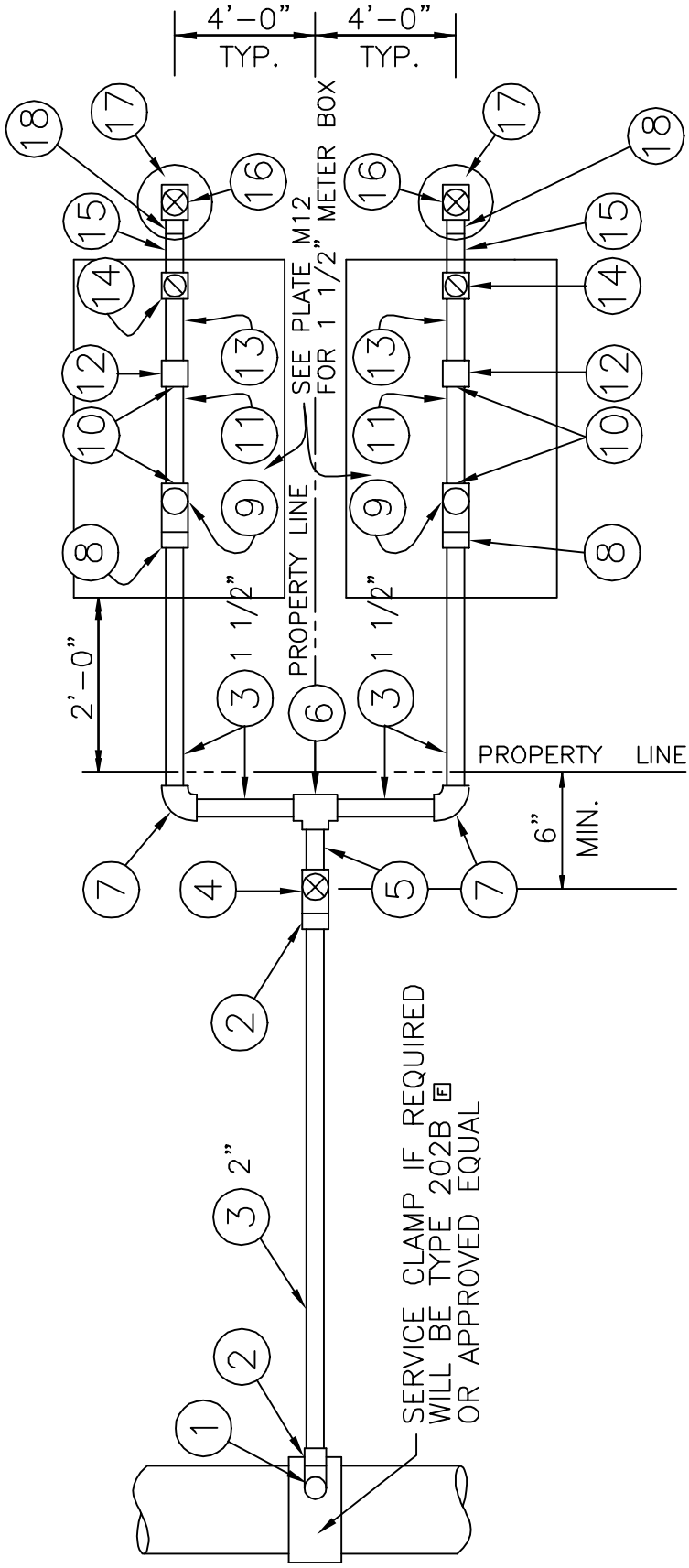

NOTE: SEE L36 FOR MATERIALS AND NOTES

			2002
			REVISION
MAUI	**DOUBLE SERVICE LATERAL** (TYPE "C-1", 1 1/2" METER) SCALE: NTS	STANDARD DETAILS	L35

TYPE	METER SIZE	1 CORP. STOP	2 COPPER ADAPTER	3 COPPER SERVICE TUBING	4 BRONZE BALL VALVE	5 COPPER ADAPTER	6 COPPER TEE	7 COPPER 90° ELLS	8 COPPER ADAPTER
C-1	1 1/2"	2" AWWA THREAD x FEMALE I.P.T. FB 1600-7 F	2" MALE I.P.T. x COPPER	SIZES AS NOTED ON L35	2" FEMALE I.P.T. B 11-777 F	2" MALE I.P.T. x C (SPIGOT)	1 1/2" x 1 1/2"x 2" C x C x C	1 1/2" C x C	1 1/2" MALE I.P.T. x COPPER

9 METER VALVE	10 STAINLESS STL. BOLTS/NUTS	11 METER IDLER	12 METER COUPLING	13 BRASS NIPPLE	14 BRASS CHECK VALVE	15 BRASS NIPPLE	16 BRONZE BALL VALVE	17 PLASTIC VALVE BOX	18 DIELECTRIC COUPLING
1 1/2" FEMALE I.P.T. x FLANGE BF 13-666 F	5/8" x 2 1/2" TYPE 304	1 1/2" x 13" FLG. x FLG. ONE END PLUGGED	1 1/2" FLG. x LOK-PAK F	1 1/2" x 6"	1 1/2" IN-LINE SPRING HS 11-666 F	1 1/2" x 14"	1 1/2" FEMALE I.P.T. B 11-666 HB-67S F	10" AMETEK 10-181-014 W/GREEN COVER 10-181-015	1 1/2" BRASS WITH ADAPTER AND CLOSE NIPPLE

NOTES:

ALL FITTINGS AND MATERIALS LISTED BY BRAND NAMES OR APPROVED EQUAL.

SEE PLATE M23 FOR TRANSPONDER BRACKET INSTALLATION.

SEE L35 FOR PLAN VIEW

F DENOTES FORD METER BOX MANUFACTURING CO. NUMBER.

MAUI

DOUBLE SERVICE LATERAL

(TYPE "C-1", 1 1/2" METER)

SCALE: NTS

STANDARD DETAILS

L36

REVISION 2002

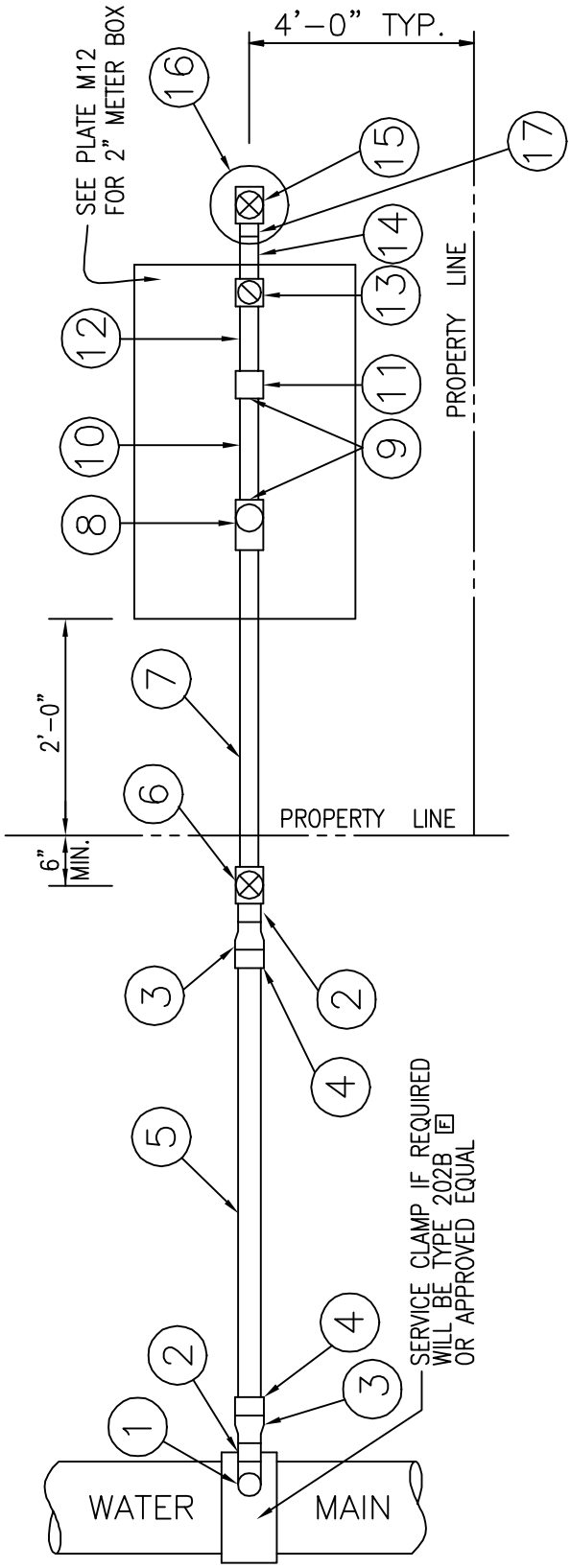

NOTE: SEE L38 FOR MATERIALS AND NOTES

			2002
			REVISION
MAUI	**SINGLE SERVICE LATERAL** (TYPE "D", 2" METER) SCALE: NTS	STANDARD DETAILS	L37

TYPE	METER SIZE	1	2 *	3 *	4 *	5 *
		STOP CORP.	BRASS NIPPLE	BRASS REDUCING COUPLING	COPPER ADAPTER	COPPER SERVICE TUBING
D	2"	2" AWWA THREAD x FEMALE I.P.T. FB 1600-7 F	2" x 4"	2 1/2" x 2" C 11-87 F	2 1/2" * (OR 2") MALE I.P.T. x COPPER	2 1/2" * (OR 2")

6	7	8	9	10	11
BRONZE BALL VALVE	BRASS NIPPLE	VALVE METER	STAINLESS STL. BOLTS/NUTS	METER IDLER	METER COUPLING
2" FEMALE I.P.T. B 11-777 F	2" x 48" (OR LENGTH TO FIT)	2" FEMALE I.P.T. x FLANGE BF 13-777 F	5/8" x 3" TYPE 304	2" x 17" FLG. x FLG. ONE END PLUGED	2" FLG. x LOK PAK F

12	13	14	15	16	17
BRASS NIPPLE	BRASS CHECK VALVE	BRASS NIPPLE	BRONZE BALL VALVE	PLASTIC VALVE BOX	DIELECTRIC COUPLING
2" x 6"	2" IN-LINE SPRING HS 11-777 F	2" x 14"	2" FEMALE I.P.T. B 11-777 HB-67 S F	10" AMETEK 10-181-014 W/ GREEN COVER 10-181-015	2" BRASS WITH ADAPTER AND CLOSE NIPPLE

NOTES:

1. ALL FITTINGS AND MATERIALS LISTED BY BRAND NAMES OR APPROVED EQUAL.
2. SEE PLATE M23 FOR TRANSPONDER BRACKET INSTALLATION.

* IF LENGTH OF SERVICE LATERAL IS LESS THAN 15 FEET, DELETE ITEMS 2 AND 3 AND USE 2" SIZE FOR ITEMS 4 AND 5.
SEE L37 FOR PLAN VIEW

F DENOTES FORD METER BOX MANUFACTURING CO. NUMBER.

MAUI

SINGLE SERVICE LATERAL

(TYPE "D", 2" METER)

SCALE: NTS

STANDARD DETAILS

L38

2002 REVISION

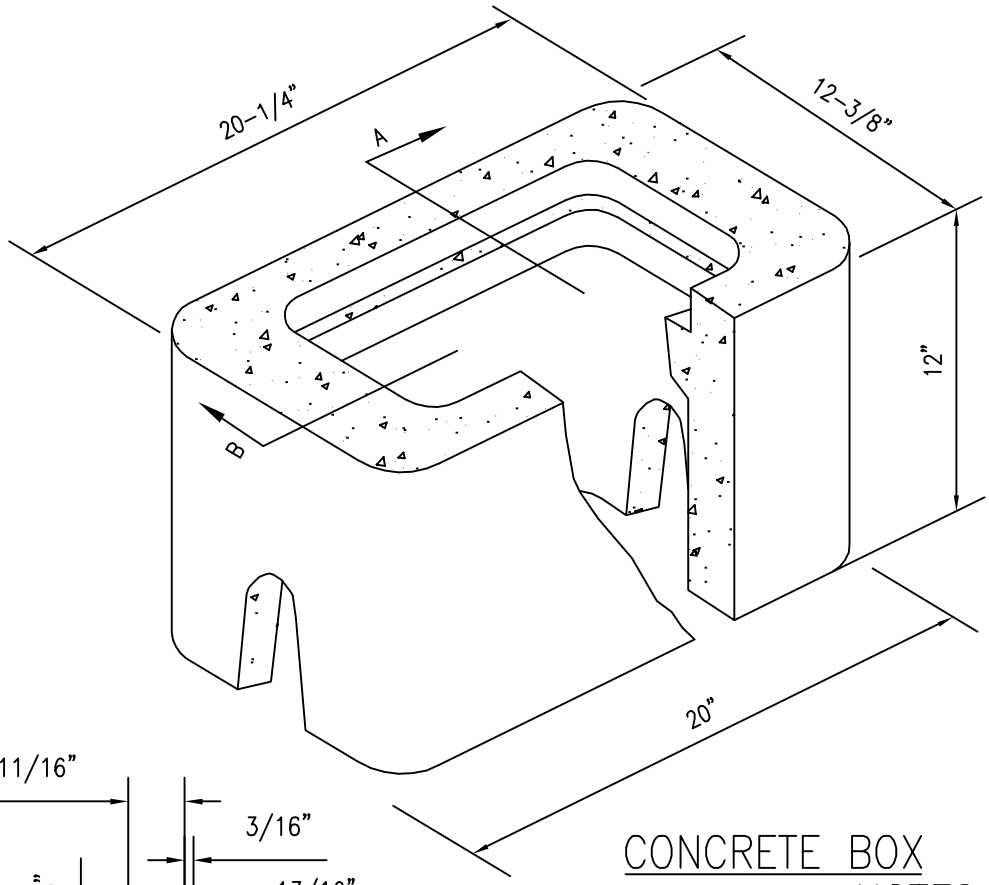

CONCRETE BOX

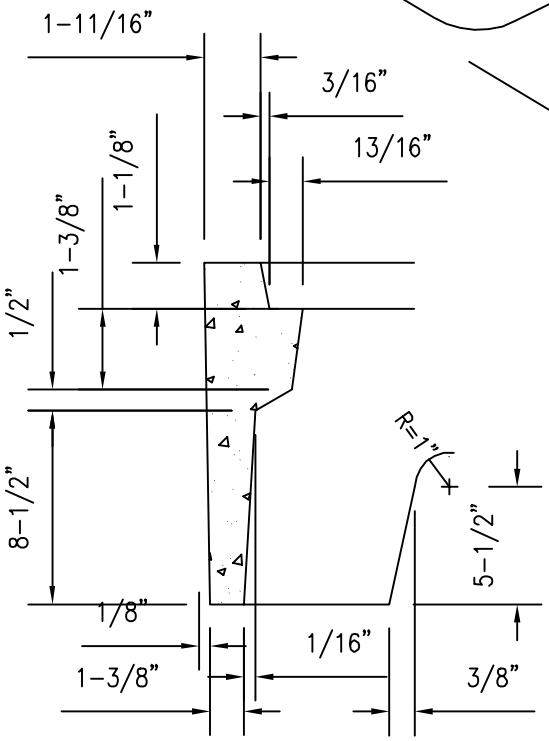

SECTION "A"

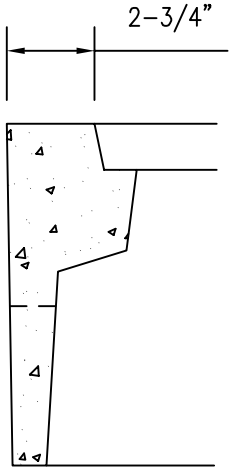

SECTION "B"

NOTES:

1. ACCOMMODATES 5/8" OR 3/4" METERS. (KAUAI AND HAWAII ONLY) AND 2" AND 2-1/2" PROPERTY VALVES (FOR OAHU)
2. ACCOMMODATES 2" & 2-1/2" VALVES.
3. SEE PLATE M2 FOR C.I. COVER DETAILS.
4. FOR OAHU AND HAWAII, FIBER REINFORCED CONC. IS ALLOWED.
5. INSTALL 6" WIDE X 4" THICK CONCRETE COLLAR WITH WIRE MESH IN NON-CONCRETE/SIDEWALK AREA WHERE APPLICABLE

	2002
	REVISION

KAUAI OAHU HAWAII	**METER BOX** TYPE "B" SCALE: NTS	STANDARD DETAILS	M1

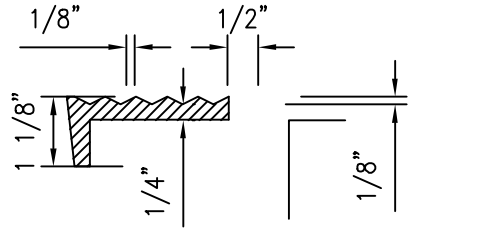

CHECKERED PATTERN

NOTE:

METAL THICKNESS DIMENSIONS ARE NET.
USE 1/2" HIGH VERTICAL LETTERS.
METER COVER SHALL BE GRAY CAST IRON, FREE OF BLISTER, BLOWHOLES, WARPAGE AND COLD SHUTS.

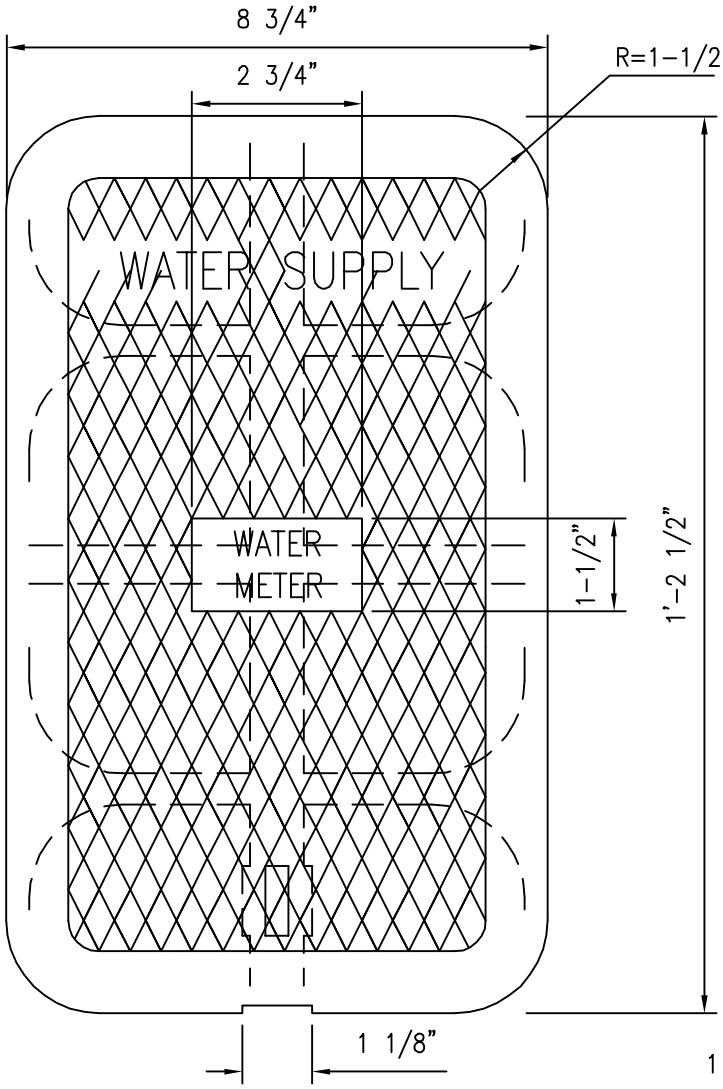

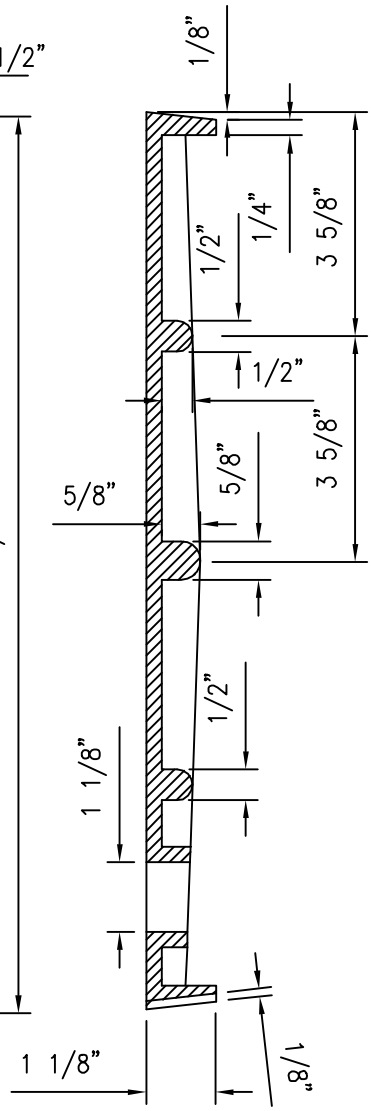

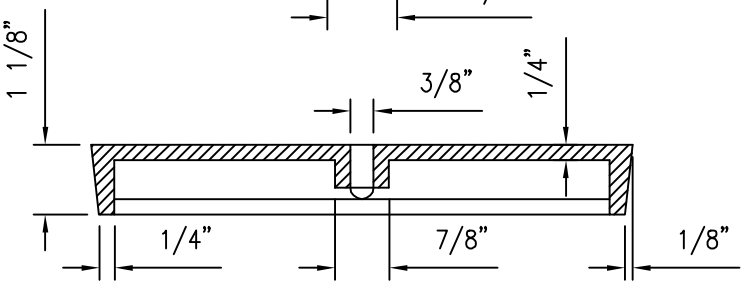

			2001
			REVISION
KAUAI OAHU HAWAII	**CAST IRON COVER** FOR TYPE "B" METER BOX SCALE: NTS	STANDARD DETAILS	M2

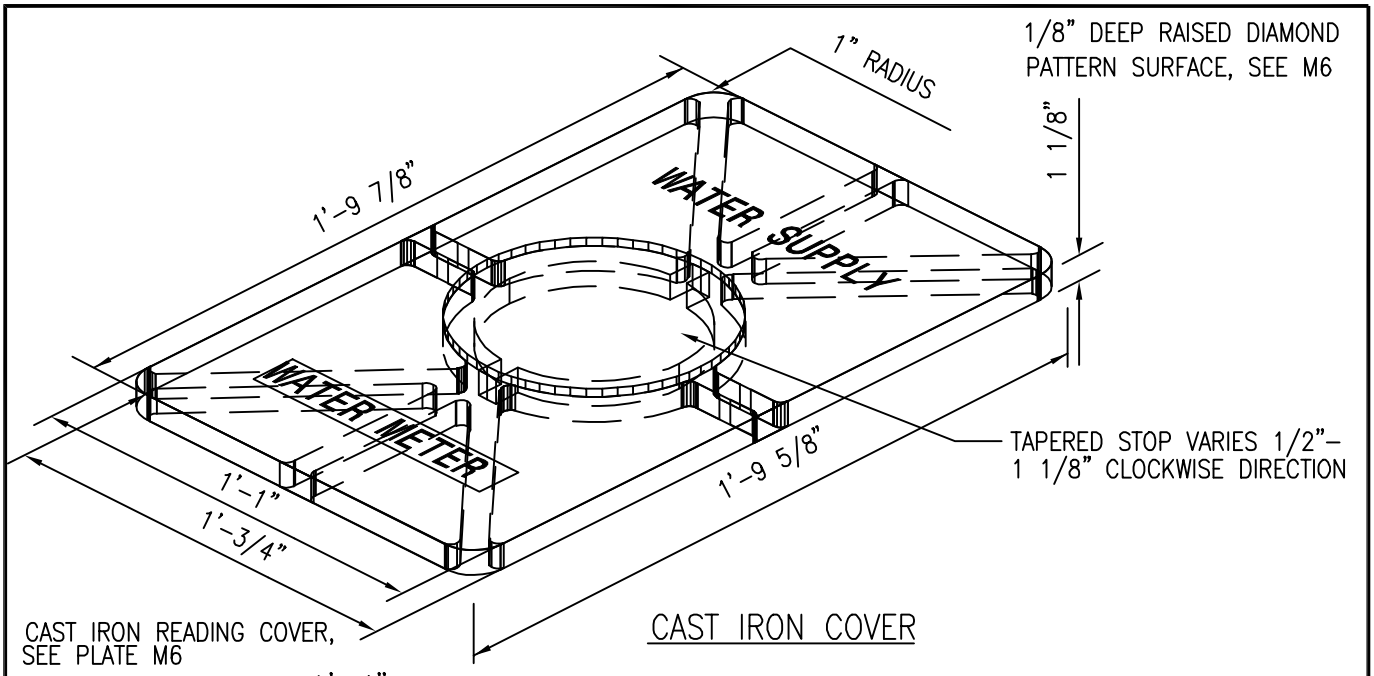

CAST IRON COVER

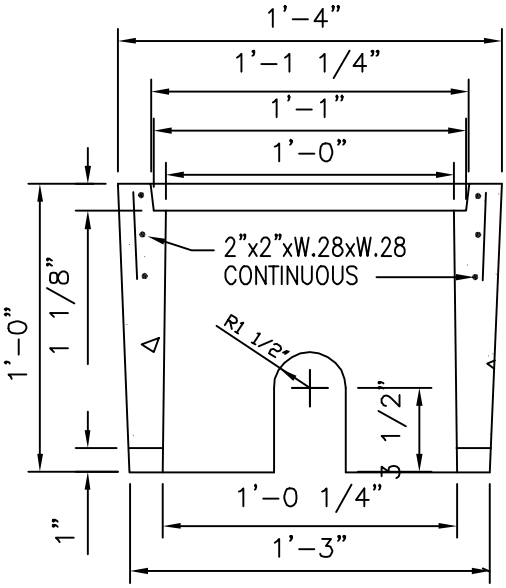

CONCRETE BOX SECTION

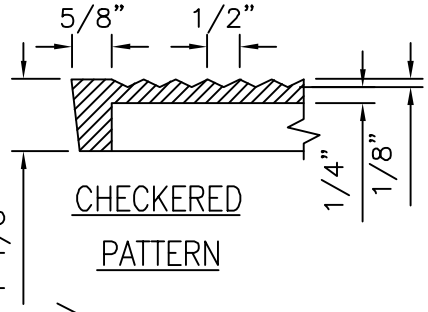

CHECKERED PATTERN

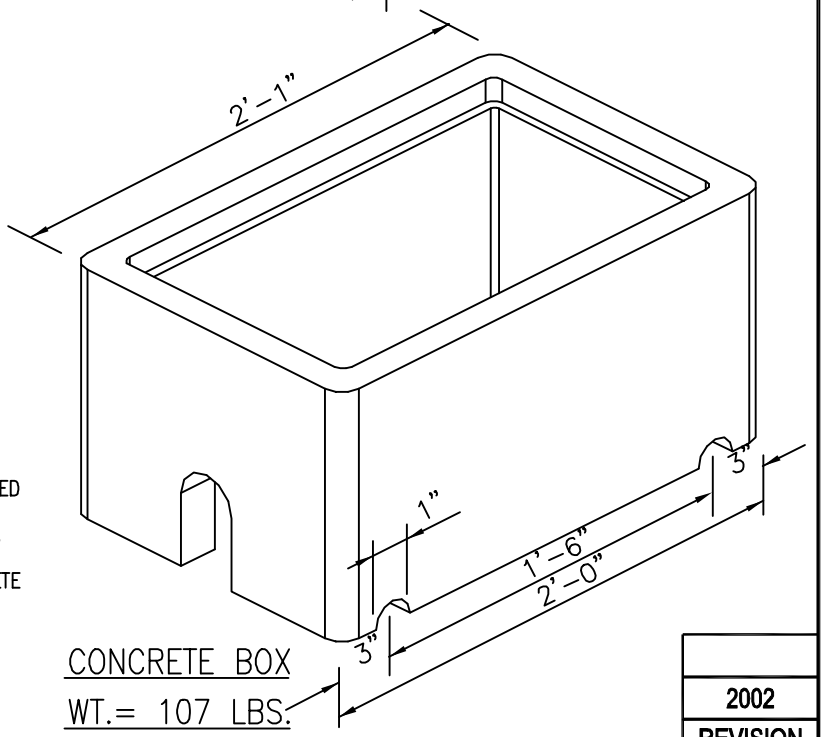

CONCRETE BOX
WT.= 107 LBS.

NOTES:

1. THICKNESS DIMENSIONS ARE NET. ADD 1/8" FOR RAISED SURFACE. RAISED SURFACE. USE 3/4" HIGH LETTERS
2. TYPE "X" METER BOX FOR 5/8", 3/4", & 1" METERS.
3. FOR "HAWAII", TYPE "X" METER BOX IS FOR 1" METER AND FOR 5/8" METERS INSTALLED IN A.C. OR CONCRETE PAVED AREA.
4. FOR OAHU AND HAWAII, FIBER REINFORCED CONCRETE IS ALLOWED.
5. SEE PLATE M24 FOR READING HOLE COVER DETAIL.
6. INSTALL 6" WIDE x 4" THICK CONC COLLAR IN NON-CONCRETE/SIDEWALK AREAS WHERE APPLICABLE.

			2002
			REVISION
KAUAI OAHU HAWAII	METER BOX & COVER TYPE "X" SCALE: NTS	STANDARD DETAILS	M3

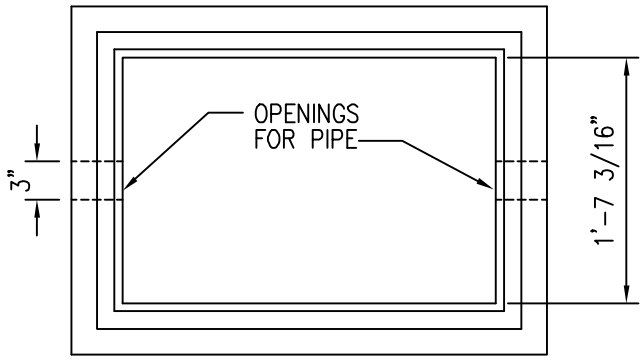

PLAN VIEW

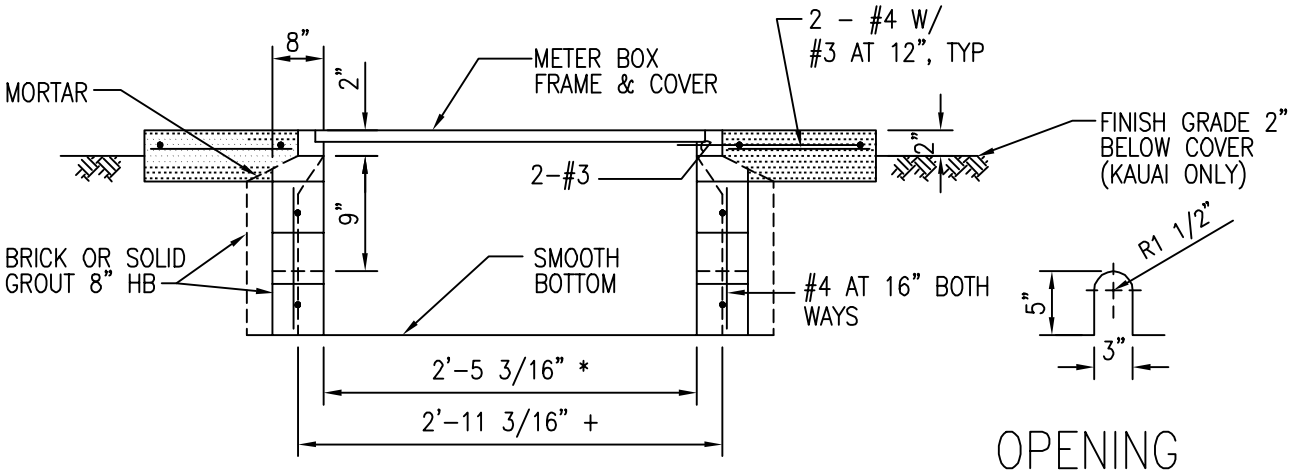

ELEVATION

OPENING

NOTE:

1. INSTALL 12" WIDE x 4" THICK CONCRETE COLLAR (REINFORCING AS SHOWN) IN NON-CONCRETE/SIDEWALK AREAS
2. DWS 3500 CONCRETE, 1500 PSI CMU AND GRADE 60 REINFORCEMENT STEELS
3. DESIGN IS BASED ON: 250 PSF LIVE LOAD, 0 FEET SURCHARGE: 60 PCF/FT AT REST PRESSURE AND WATER TABLE BELOW BOTTOM OF METER BOX PER ASSHTO LRFD BRIDGE SPECIFICATION (1998). NON TRAFFIC TYPE
4. ALL CELLS SHALL BE GROUTED SOLID WITH 2500 PSI GROUT, TYPE M MORTAR

* FOR 1½" AND 2" METERS ON OAHU, 2" METERS ON KAUAI

			2002
			REVISION
KAUAI OAHU	**METER BOX TYPE III** FOR 1 1/2" & 2" METERS SCALE: NTS	STANDARD DETAILS	M4

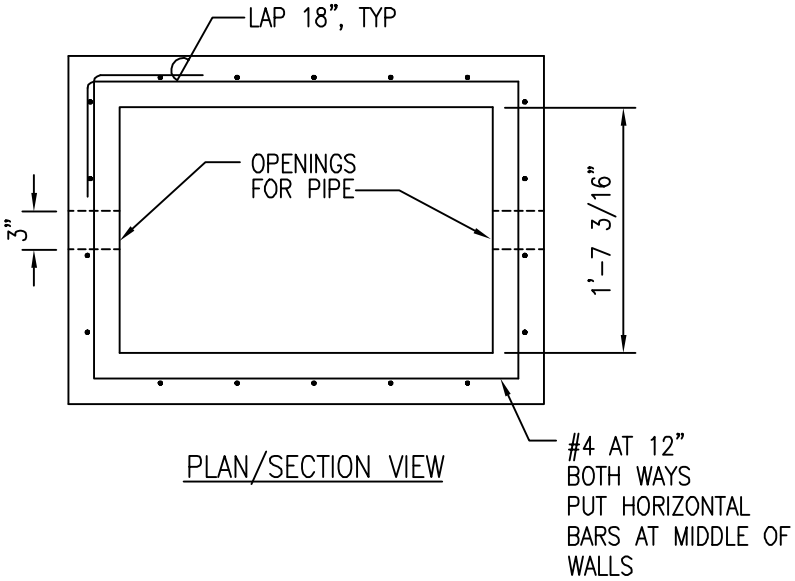

PLAN/SECTION VIEW

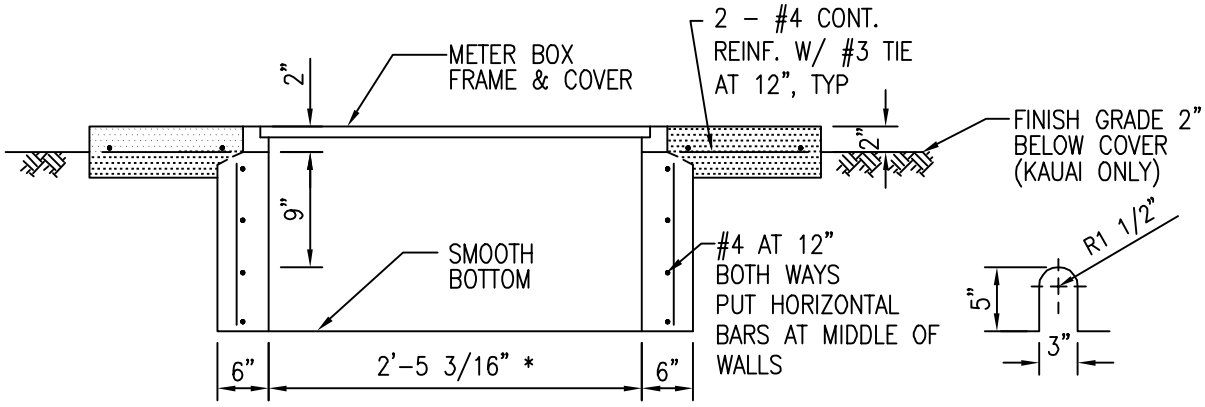

ELEVATION

OPENING

NOTE:

1. INSTALL 12" WIDE x 4" THICK CONCRETE COLLAR (REINFORCING AS SHOWN) IN NON-CONCRETE/SIDEWALK AREAS
2. DWS 3500 CONCRETE AND GRADE 60 REINFORCING STEEL
3. DESIGN IS BASED ON: 250 PSF LIVE LOAD. 0 FEET SURCHARGE: 60 PCF/FT AT REST PRESSURE AND WATER TABLE BELOW BOTTOM OF METER BOX PER ASSHTO LRFD BRIDGE SPECIFICATION (1998) NON TRAFFIC TYPE

* FOR 1½" AND 2" METERS ON OAHU, 2" METERS ON KAUAI

			2002
			REVISION
KAUAI OAHU	METER BOX TYPE III FOR 1 1/2" & 2" METERS SCALE: NTS	STANDARD DETAILS	M5

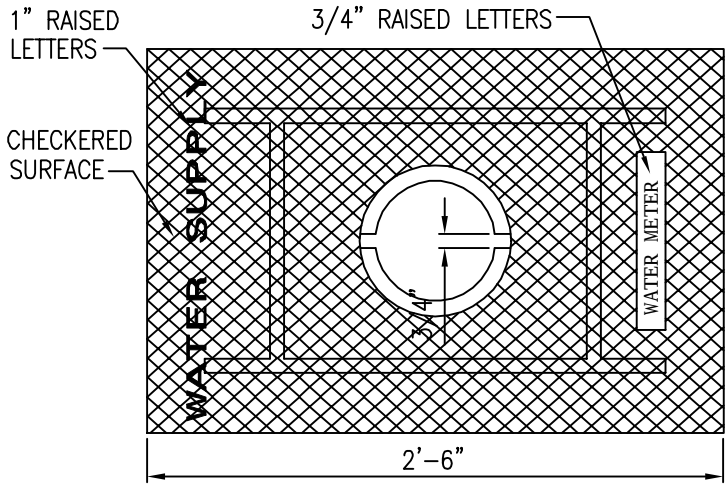

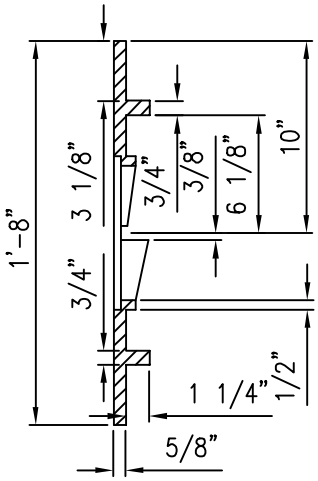

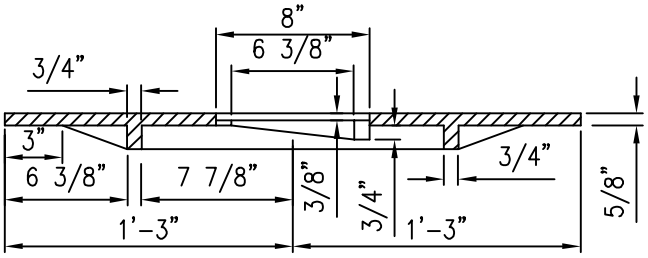

PLATE

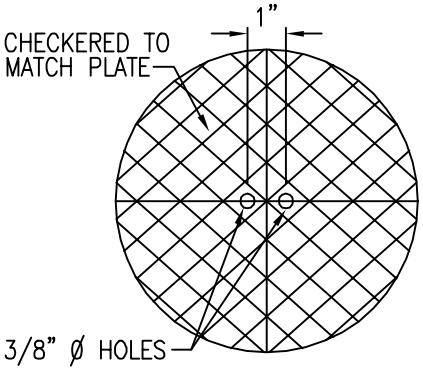

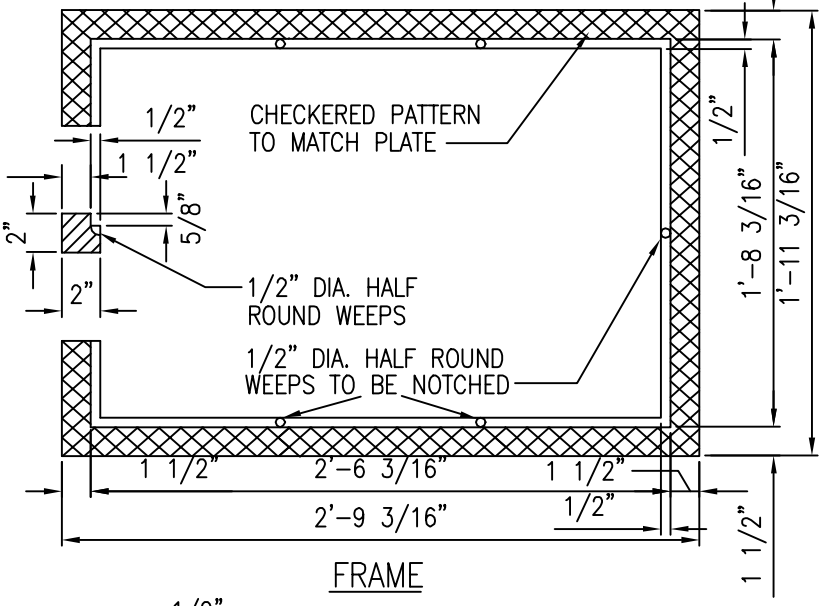

FRAME

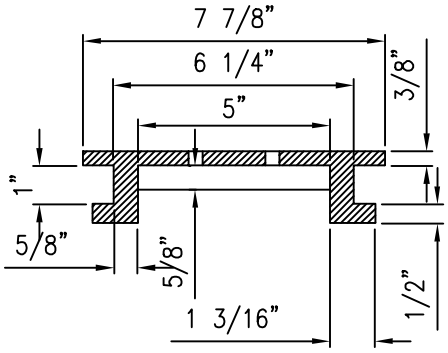

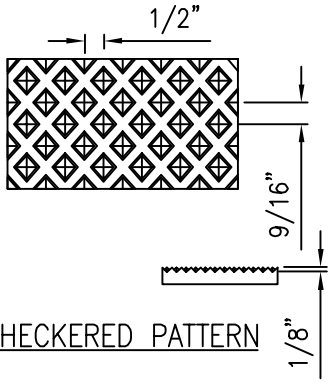

CHECKERED PATTERN

NOTE:

THICKNESS DIMENSIONS ARE NET.
ADD 1/8" FOR RAISED SURFACE.

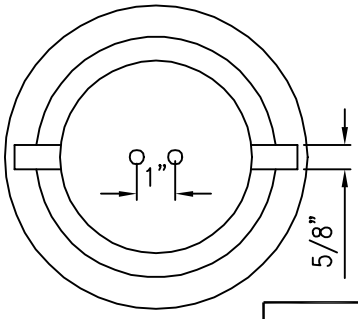

READING COVER

			2002
			REVISION
KAUAI OAHU	**METER BOX FRAME & COVER** CAST IRON, TYPE III SCALE: NTS	STANDARD DETAILS	M6

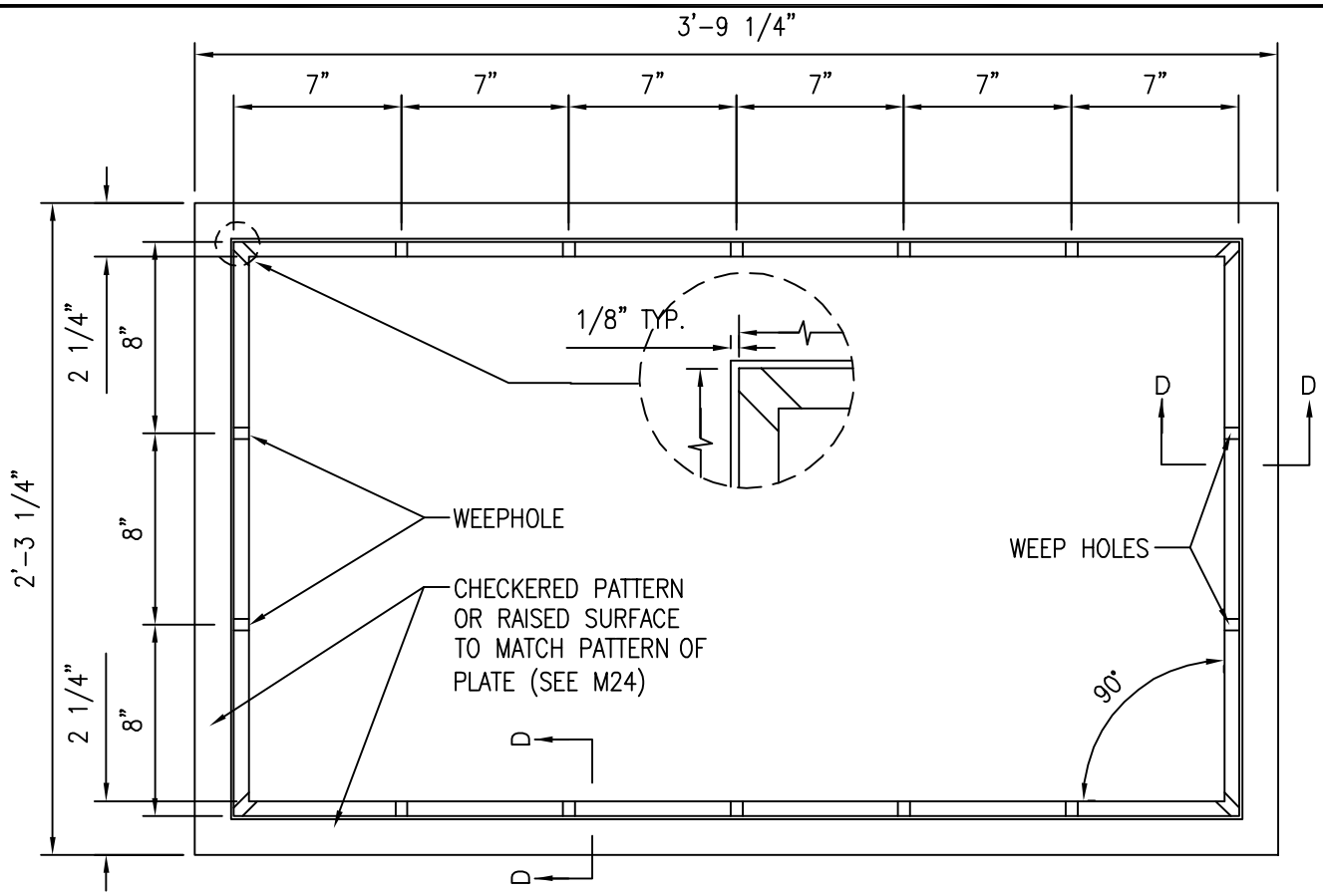

PLAN VIEW OF CAST IRON FRAME
FOR 24"x42"x3/4" PLATE

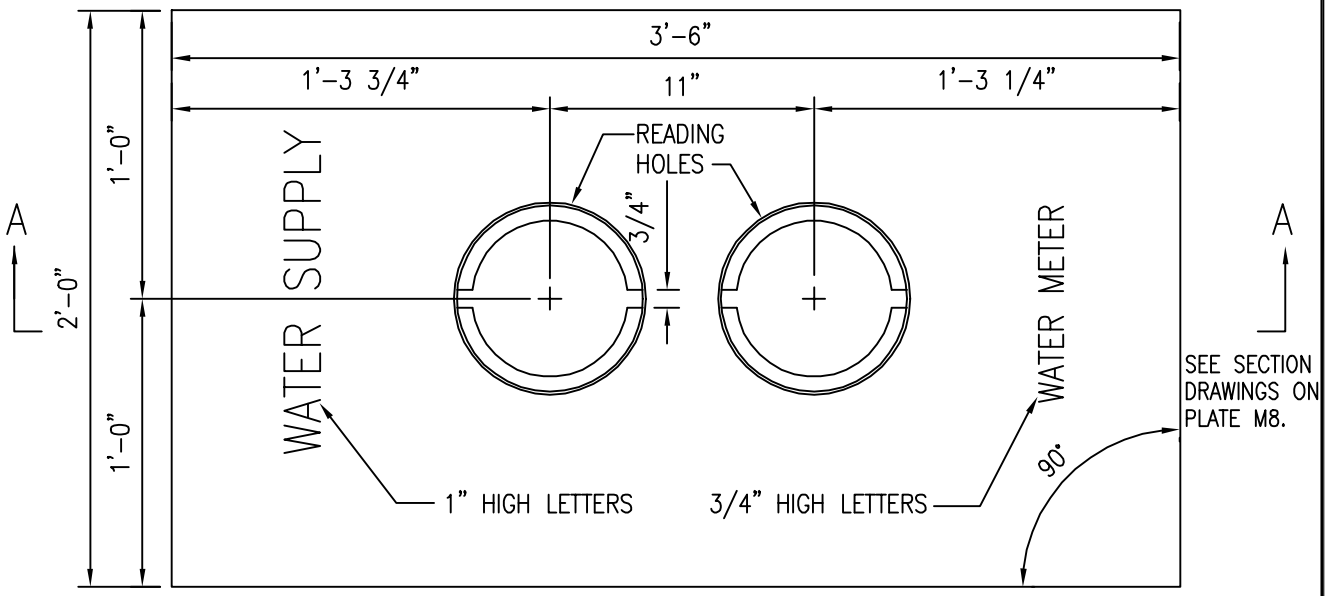

SEE PLATE M24 FOR
READING HOLE COVER AND
DETAILS OF RAISED SURFACE.

PLAN VIEW OF 24"x42"x3/4"
CAST IRON PLATE

	2002
	REVISION

KAUAI OAHU	**METER BOX FRAME & COVER** **CAST IRON, TYPE IV FOR 3" & 4" METERS** **SCALE: NTS**	STANDARD DETAILS	M7

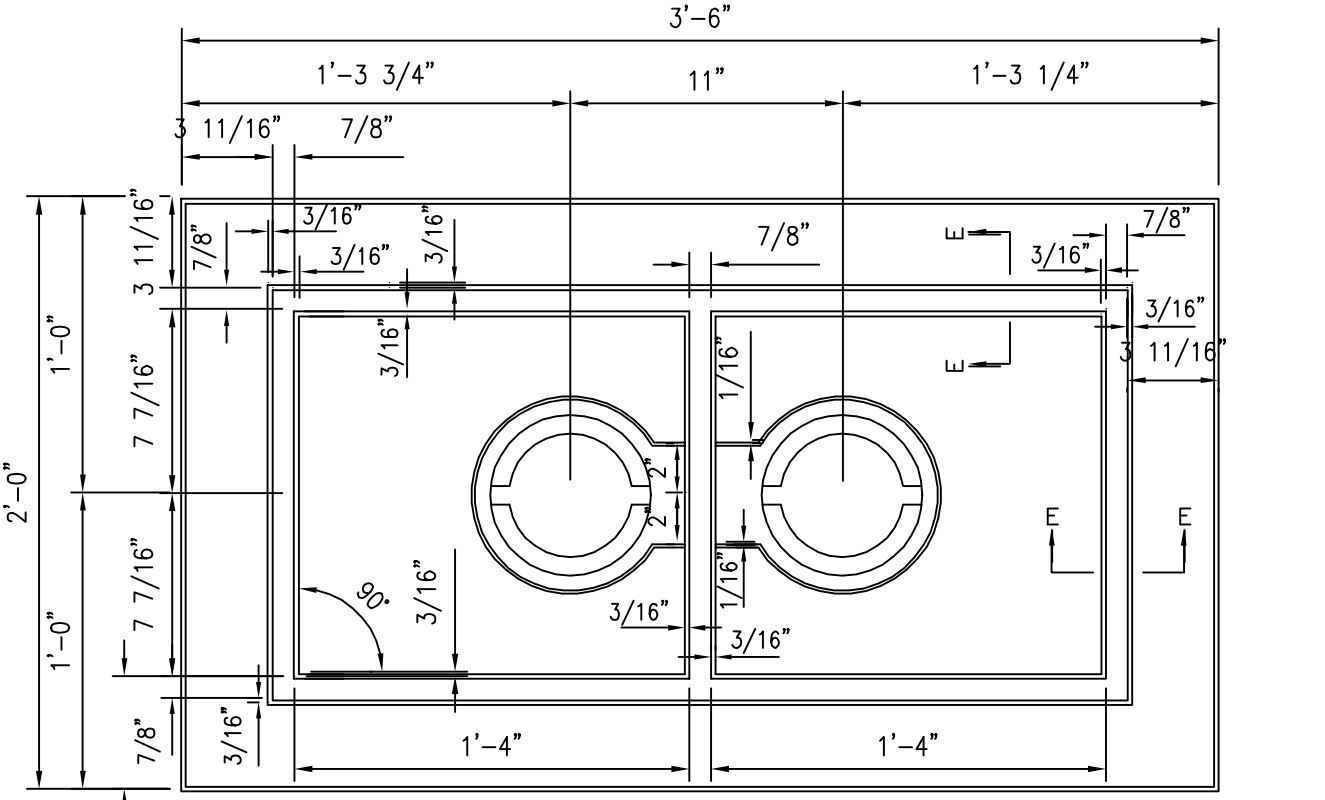

BOTTOM VIEW OF 24"x42"x3/4" CAST IRON PLATE

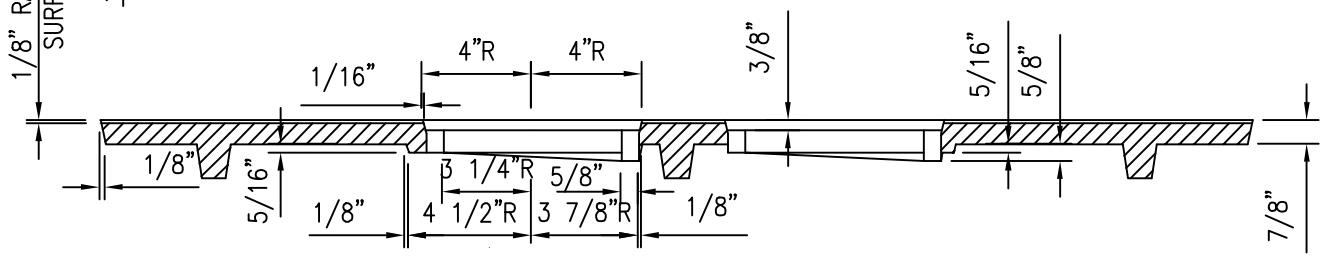

SECTION "A-A"
(SEE M7)

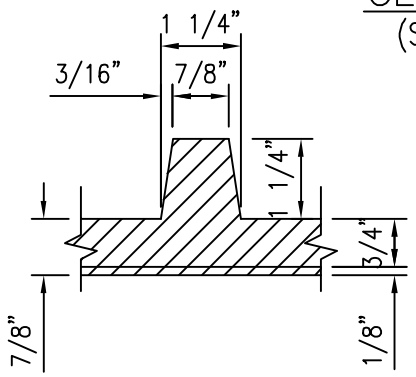

SECTION "E-E"

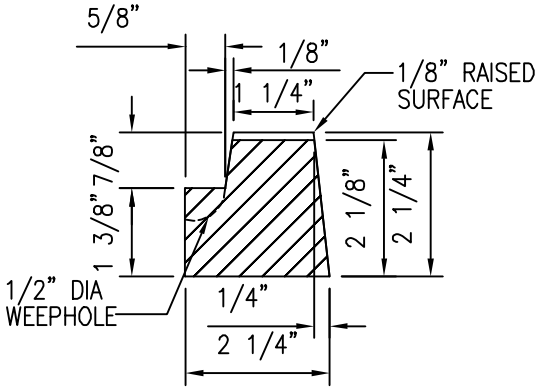

SECTION "D-D"
(SEE M7)

			2002
			REVISION
KAUAI OAHU	**METER BOX COVER** CAST IRON, TYPE IV SCALE: NTS	STANDARD DETAILS	M8

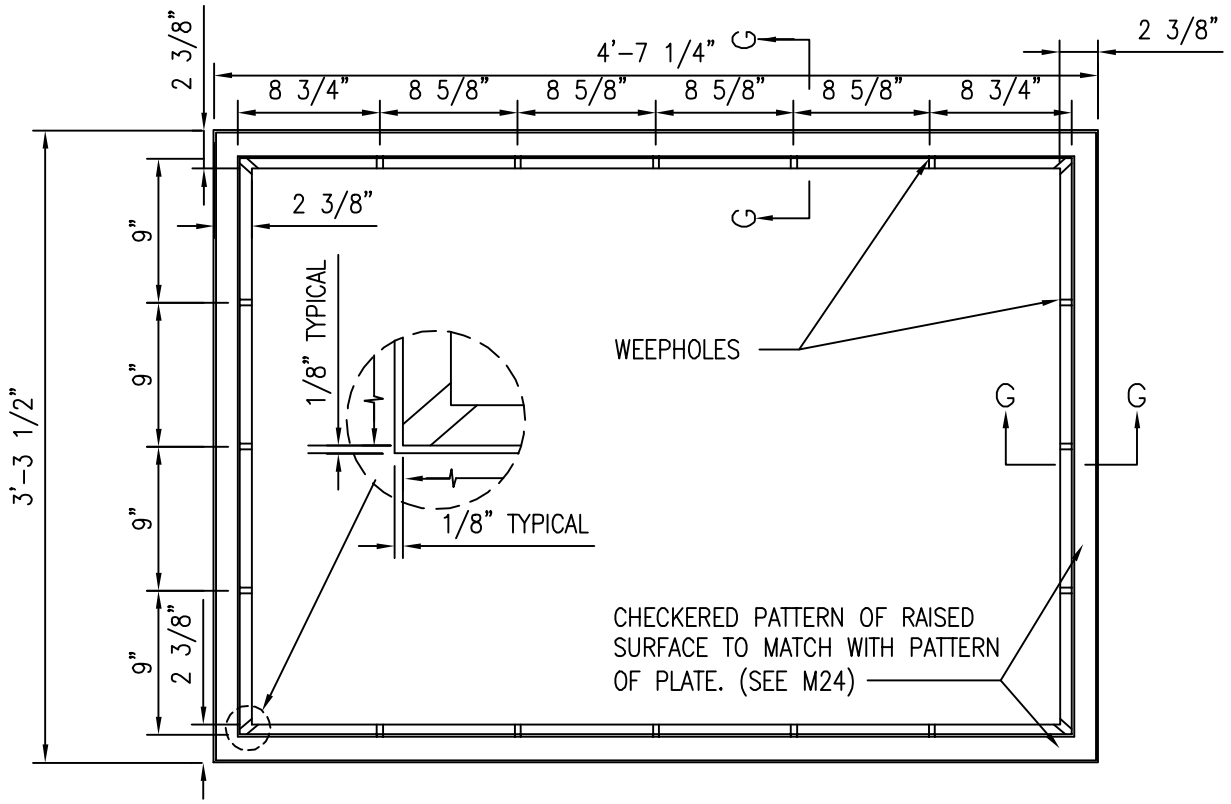

PLAN VIEW OF CAST IRON FRAME FOR 36"x52"x3/4" PLATE

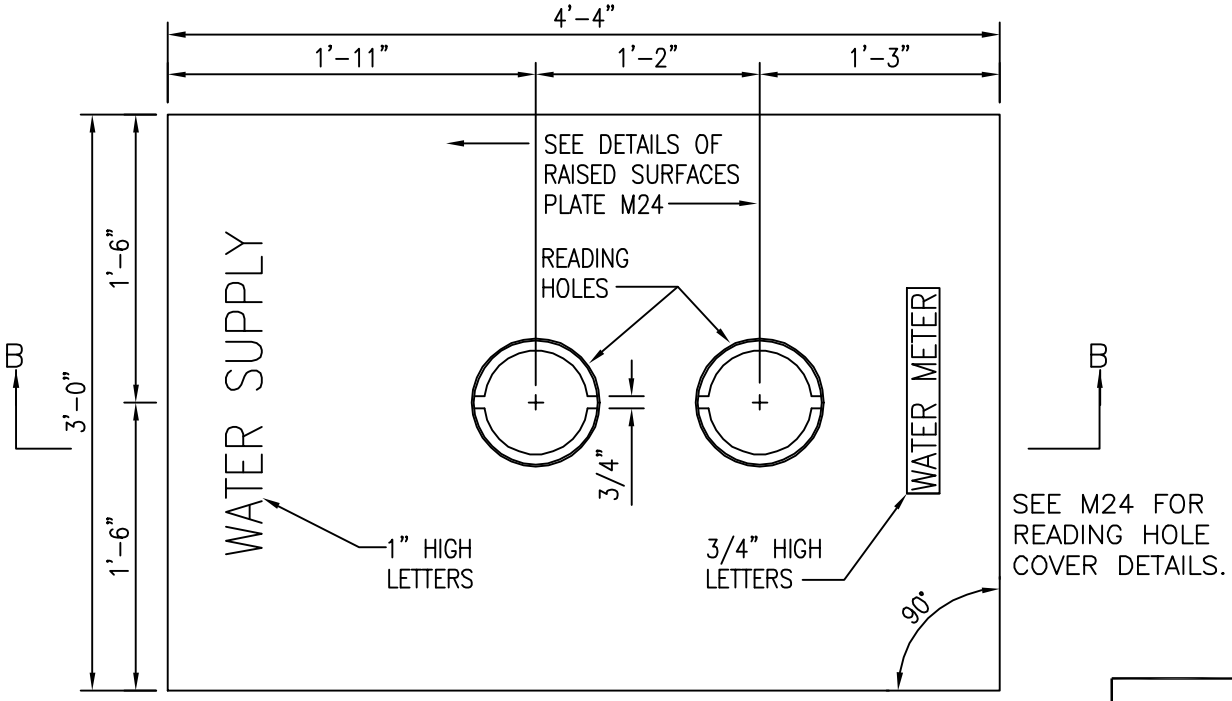

PLAN VIEW OF 36"x52"x3/4" CAST IRON PLATE

			2002
			REVISION
KAUAI OAHU	**METER BOX FRAME & COVER** CAST IRON, TYPE V FOR 6" & 8" METERS SCALE: NTS	STANDARD DETAILS	M9

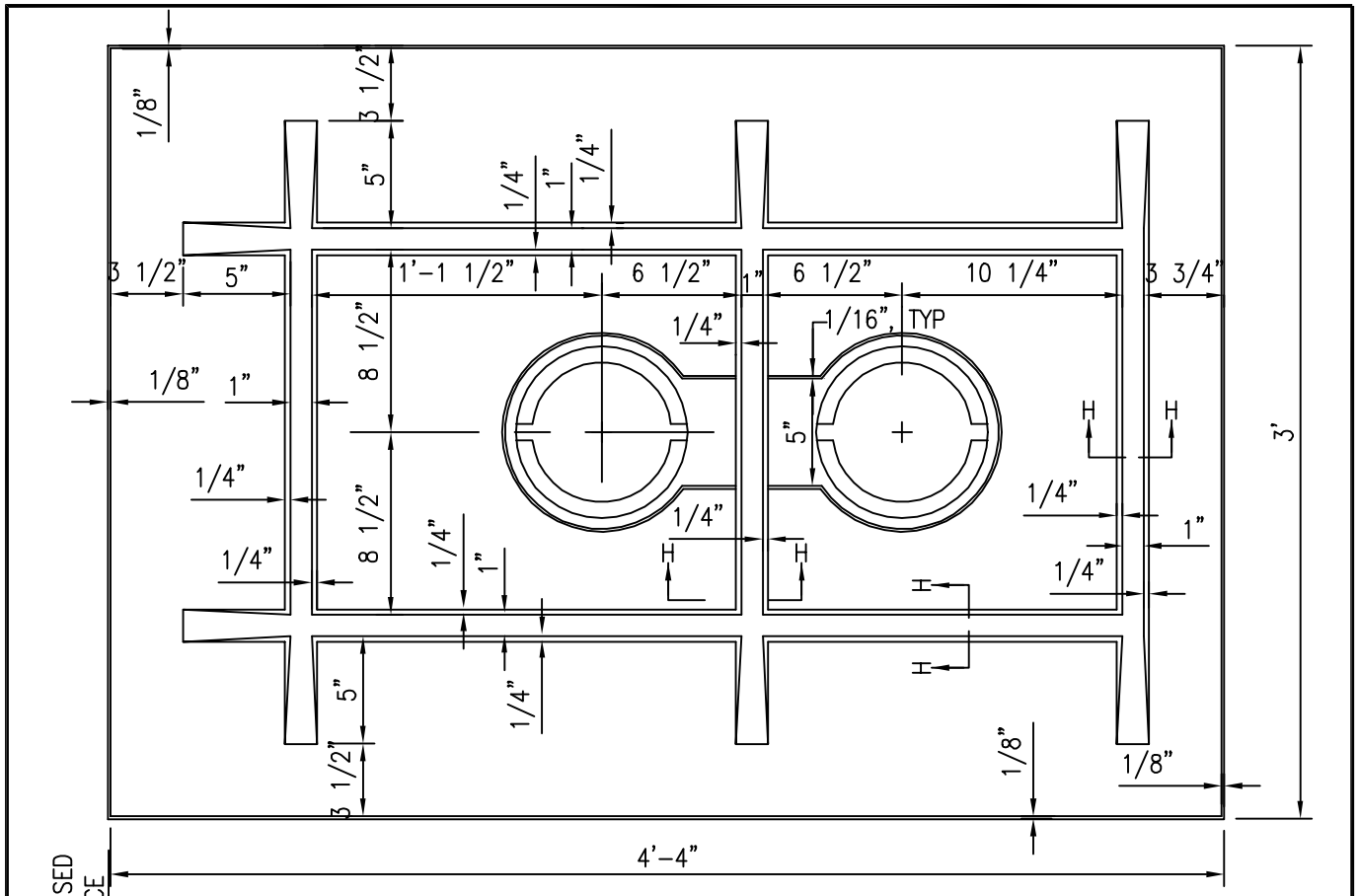

BOTTOM VIEW OF 36"x52"x3/4" CAST IRON PLATE

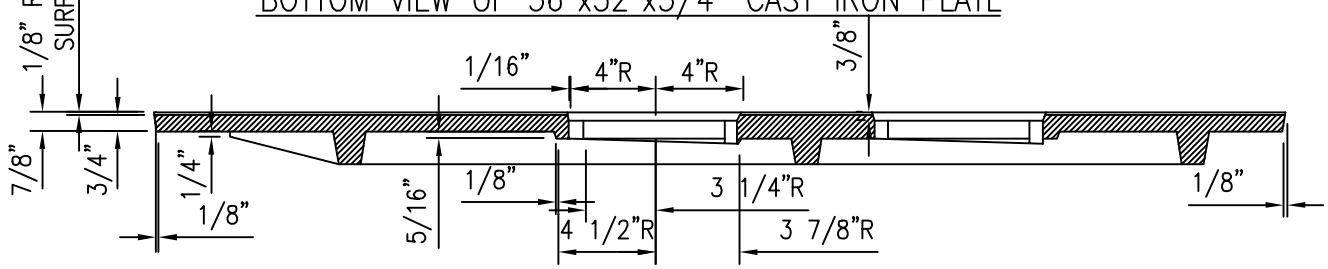

SECTION "B-B"
SEE M9

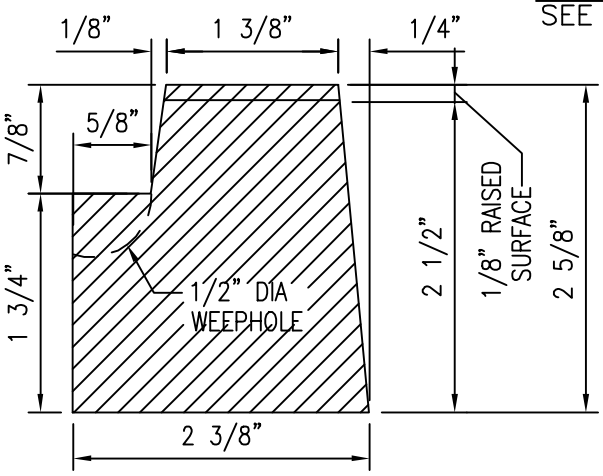

SECTION "G-G"
SEE M9

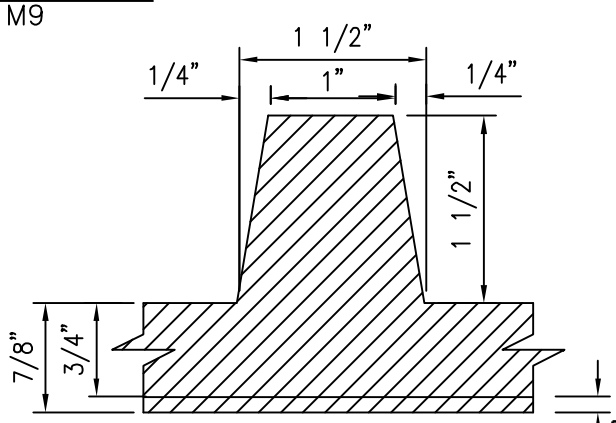

SECTION "H-H"

KAUAI OAHU	**METER BOX COVER** CAST IRON, TYPE V SCALE: NTS	STANDARD DETAILS	M10

2002
REVISION

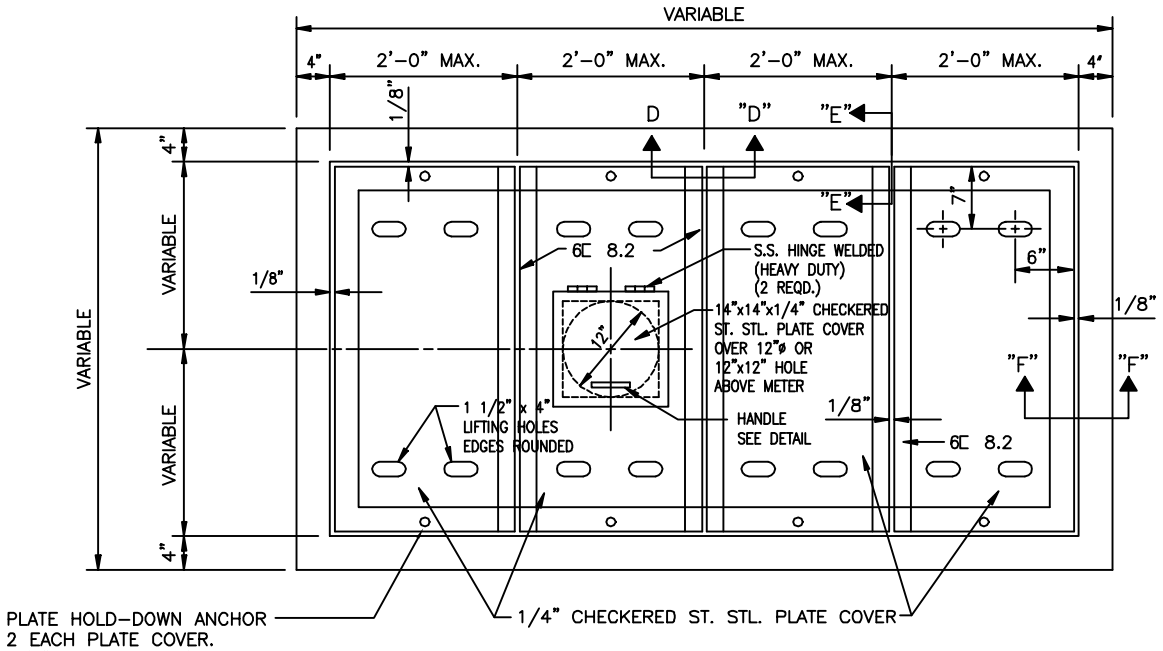

PLAN OF STAINLESS (316) STEEL* MANHOLE COVER

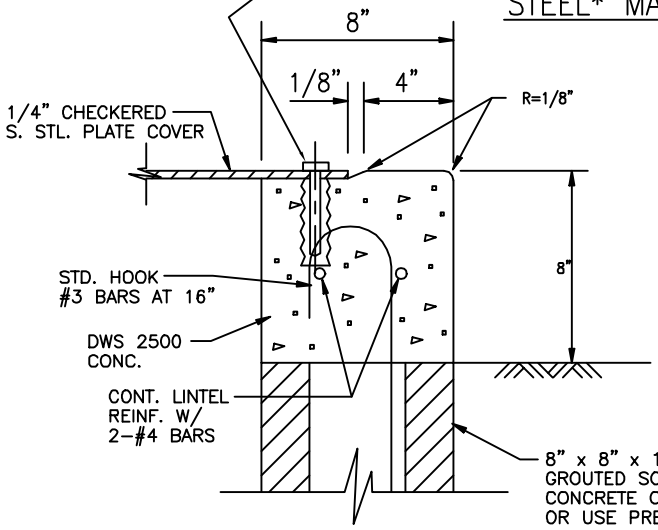

SECTION "F-F"

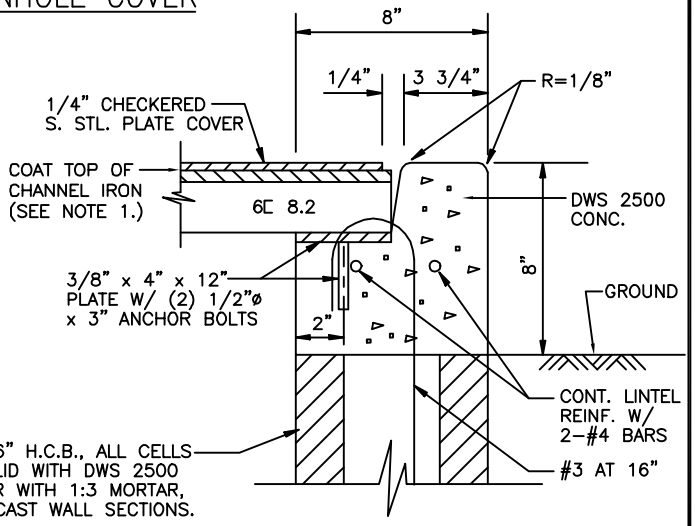

SECTION "E-E"

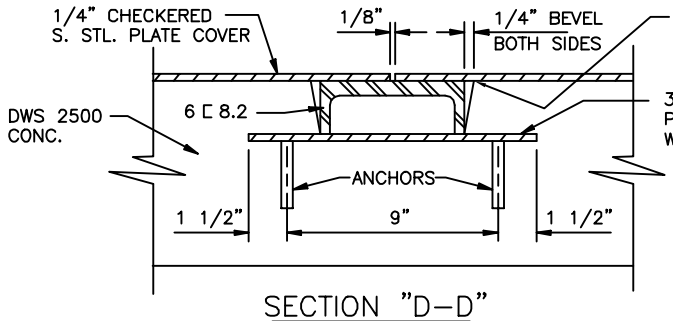

SECTION "D-D"

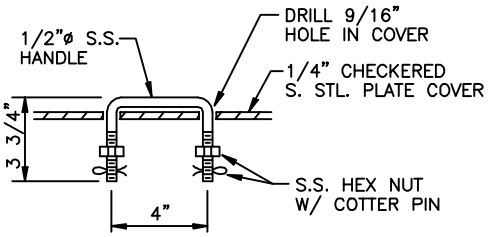

HANDLE DETAIL

NOTES:

1. COAT CONTACT POINT OF DISSIMILAR METALS W/ CHEVRON INDUSTRIAL MEMBRANE (ELASTOMERIC MEMBRANE) OR EQUAL.

2. ALL MILD STEEL SHALL BE HOT-DIPPED GALVANIZED.

* ALTERNATE = PROVIDE DESIGN WITH ANODIZED ALUMINUM COVER.

** USE HEX HEAD FOR DETECTOR CHECK MANHOLES.

	2002
	REVISION

MAUI	**METAL MANHOLE COVER** **(NON-TRAFFIC LOADING)** **SCALE: NTS**	STANDARD DETAILS	M11

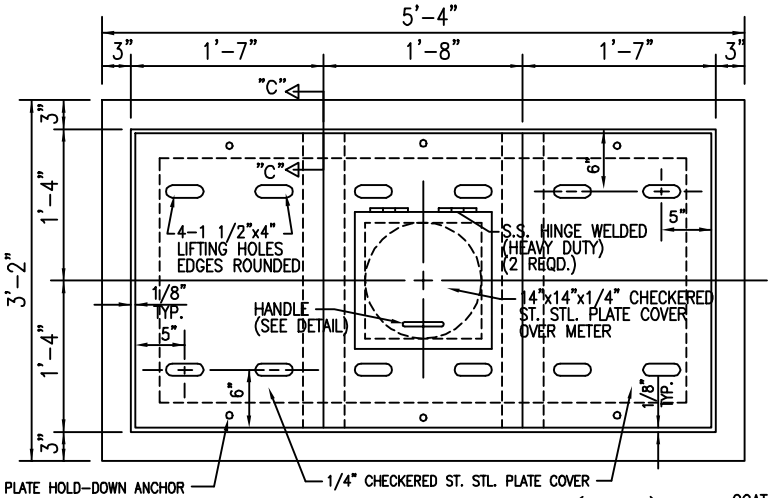

PLAN OF STAINLESS (316) STEEL* MANHOLE COVER

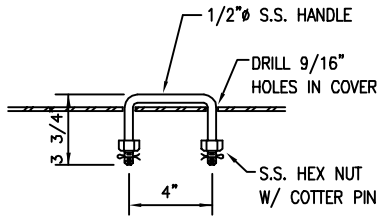

HANDLE DETAIL

NOTE:

EACH PANEL WIDTH OF METER BOX COVER MAY VARY SLIGHTLY ACCORDING TO METER LOCATION.

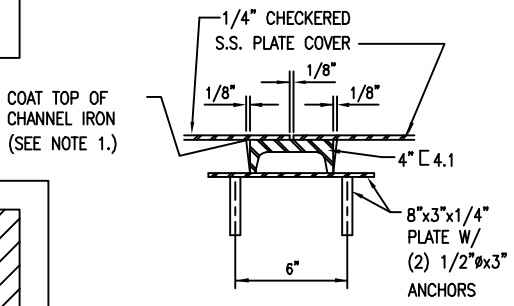

DETAIL "B"

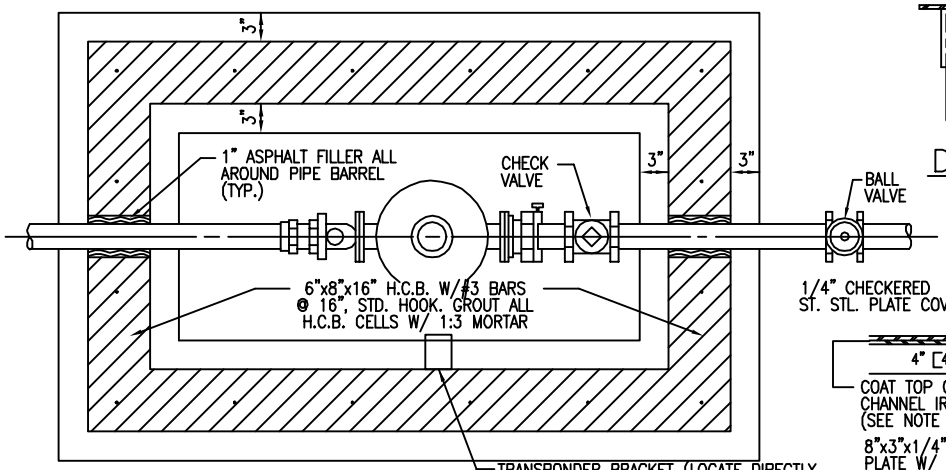

PLAN OF MANHOLE

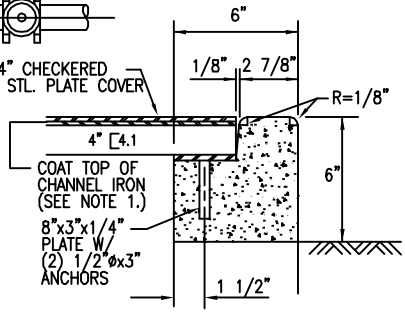

SECTION "C-C"

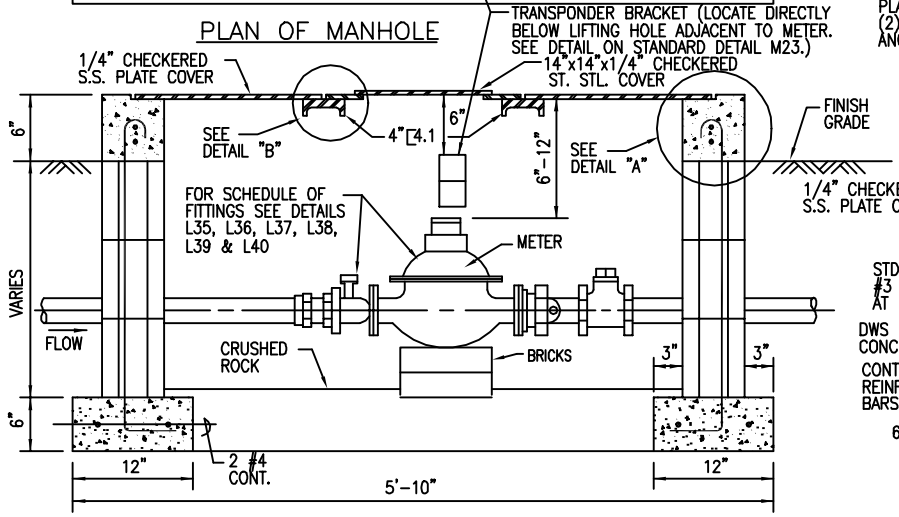

SECTION

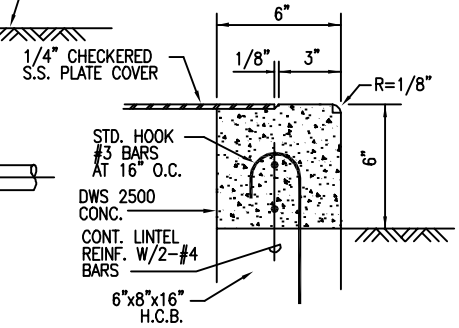

DETAIL "A"

NOTES:

1. COAT CONTACT POINT OF DISSIMILAR METALS W/ CHEVRON INDUSTRIAL MEMBRANE (ELASTOMERIC MEMBRANE) OR EQUAL.
2. ALL MILD STEEL SHALL BE HOT-DIPPED GALVANIZED.

* ALTERNATE = PROVIDE DESIGN WITH ANODIZED ALUMINUM COVER.

	2002
	REVISION

MAUI	1 1/2" & 2" METER MANHOLE STANDARD NON-TRAFFIC SCALE: NTS	STANDARD DETAILS	M12

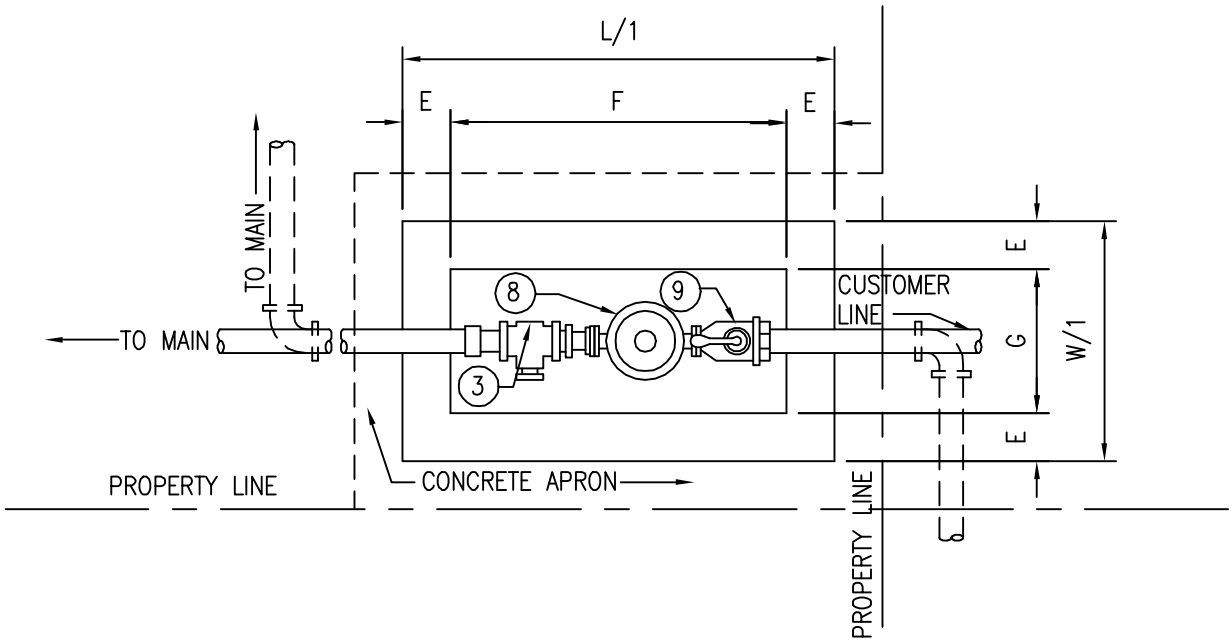

PLAN

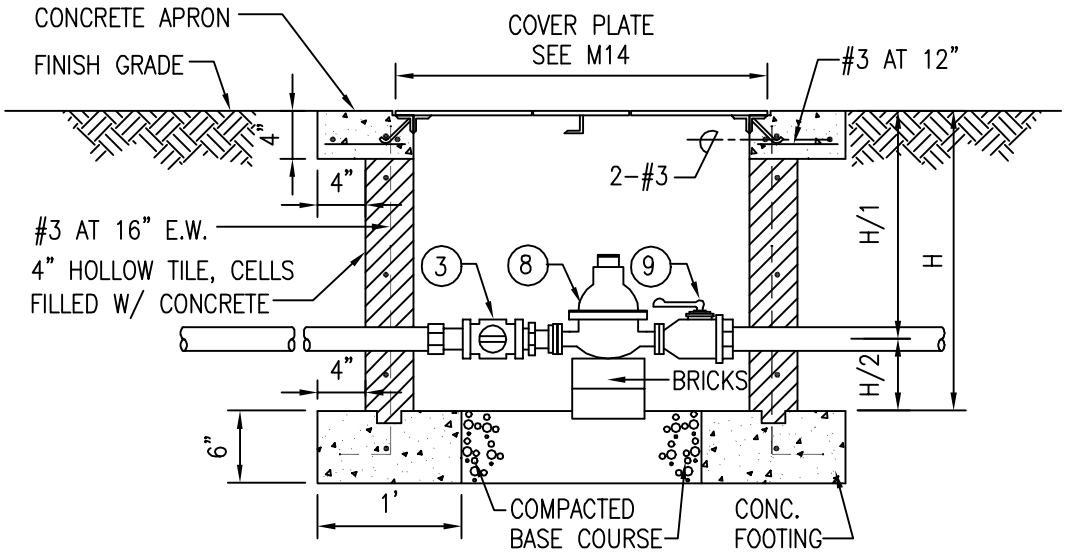

ELEVATION

NOTE:

REFER TO PLATE L10 FOR SCHEDULE OF COPPER FITTINGS. FOR SERVICE SADDLE REQUIREMENT, SEE DIVISION 100, SECTION 104.02, OF THE WATER SYSTEM STANDARDS. FOR 1-1/2" AND 2" METERS, INSTALL FORD "LOK-PAK" METER COUPLING AND NECESSARY ADAPTERS.

METER BOX DIMENSIONS(IN INCHES)								
METER SIZES	L/1	E	F	W/1	G	H	H/1	H/2
1	36	4	28	20	12	25	19	6
1 1/2	44	4	36	28	20	25	19	6
2	52	4	44	28	20	27	21	6

2002
REVISION

HAWAII

STANDARD 1", 1 1/2", & 2"
METER AND BOX INSTALLATION
SCALE: NTS

STANDARD DETAILS

M13

COVER PLATE DIMENSIONS (IN INCHES)					
METER SIZE	L	W	L/3	A	B
1*	32	16			
1 1/2	40	24		16	8
2	48	24	16		
ALL PLATES USS MULTI-GRIP OR CHECKER STEEL, 3/8" THICK					

* COVER PLATE DETAILS FOR 1" METER SHALL BE SIMILAR TO SHOWN BELOW EXCEPT 2-16"x16"x3/8" PLATES REQUIRED

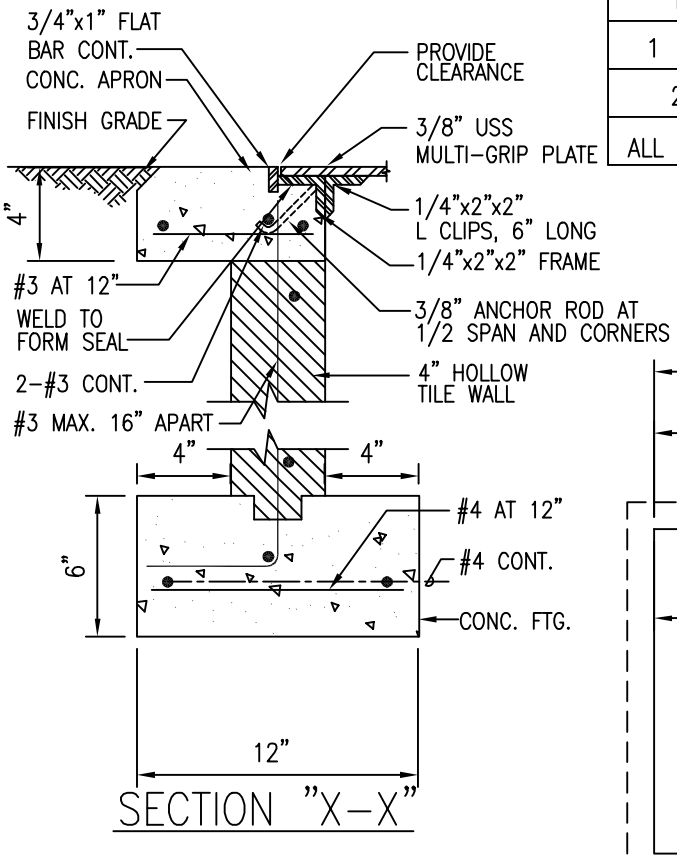

SECTION "X-X"

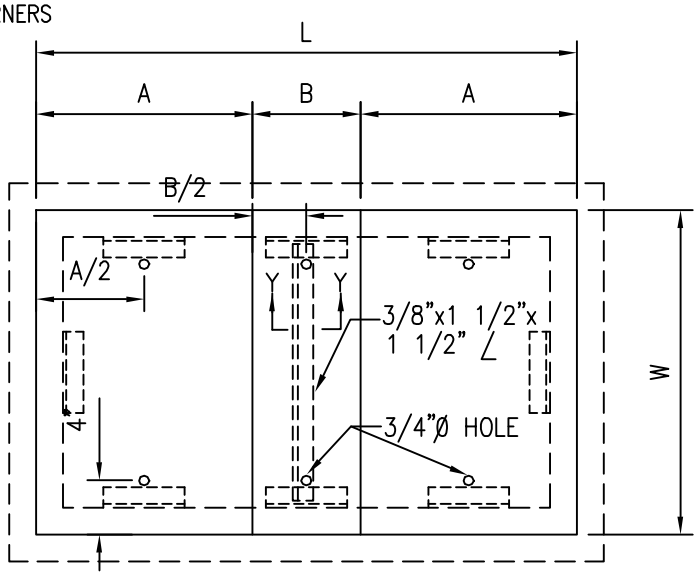

1 1/2" METER BOX COVER

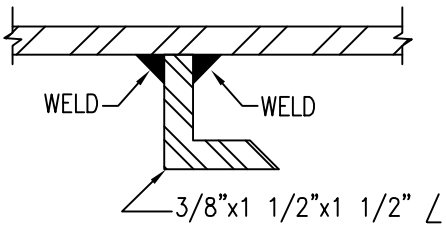

SECTION "Y-Y"

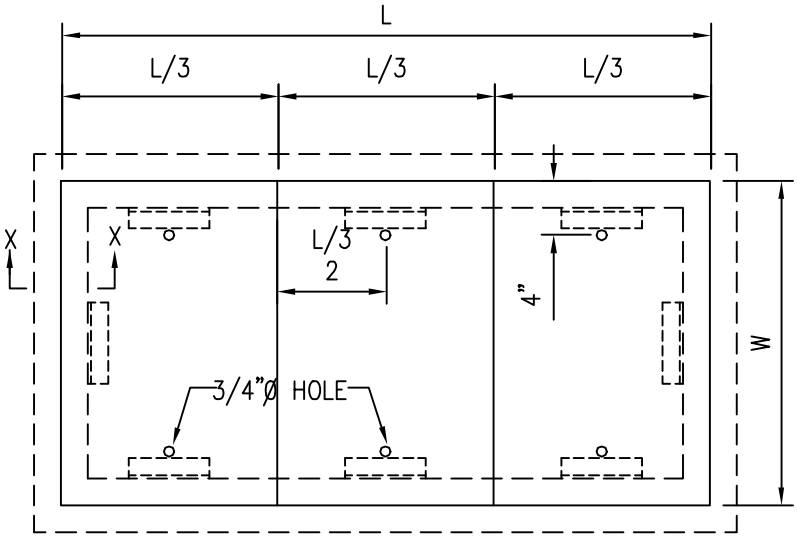

2" METER BOX COVER

NOTE:
ALL ∠ IRONS AND PLATES SHALL BE HOT DIPPED GALVANIZED AFTER FABRICATION.

			2002
			REVISION
HAWAII	STANDARD METER COVERS SCALE: NTS	STANDARD DETAILS	M14

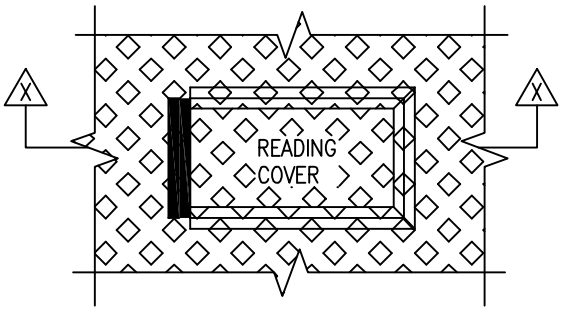

PLAN

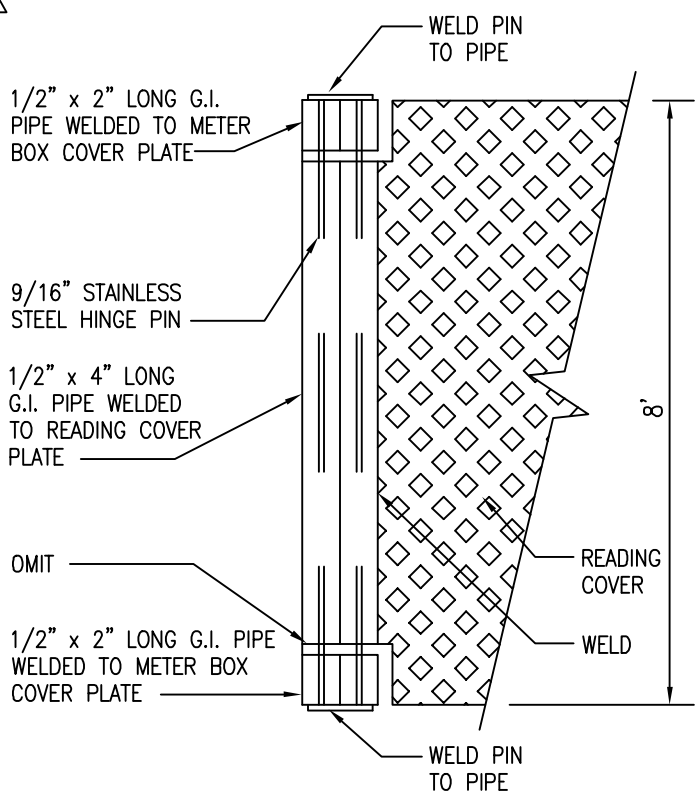

HINGE DETAIL

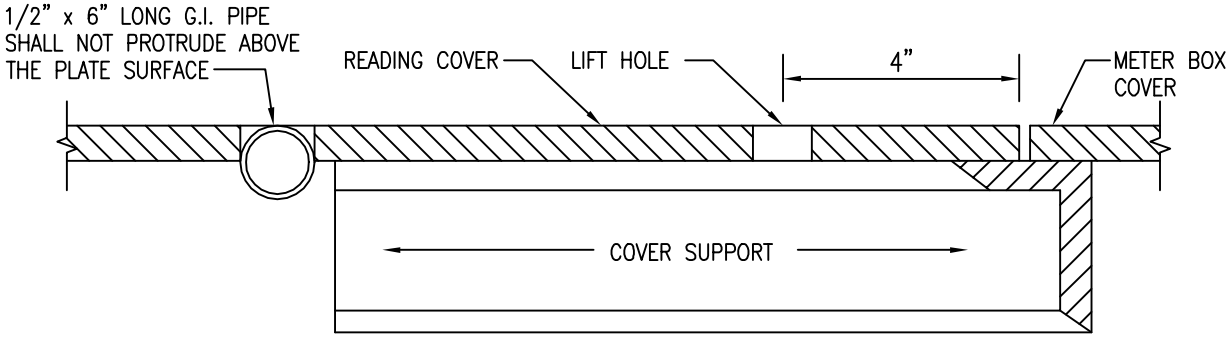

SECTION X–X

READING COVER FOR:

COMPOUND METER BOX COVER SEE PLATES M16 & M17
MFM–MCT METER BOX COVER SEE PLATES M21 & M22 DETECTOR
CHECK METER BOX COVER SEE PLATES M18 & M20

			2002
			REVISION
HAWAII	READING COVER DETAIL SCALE: NTS	STANDARD DETAILS	M15

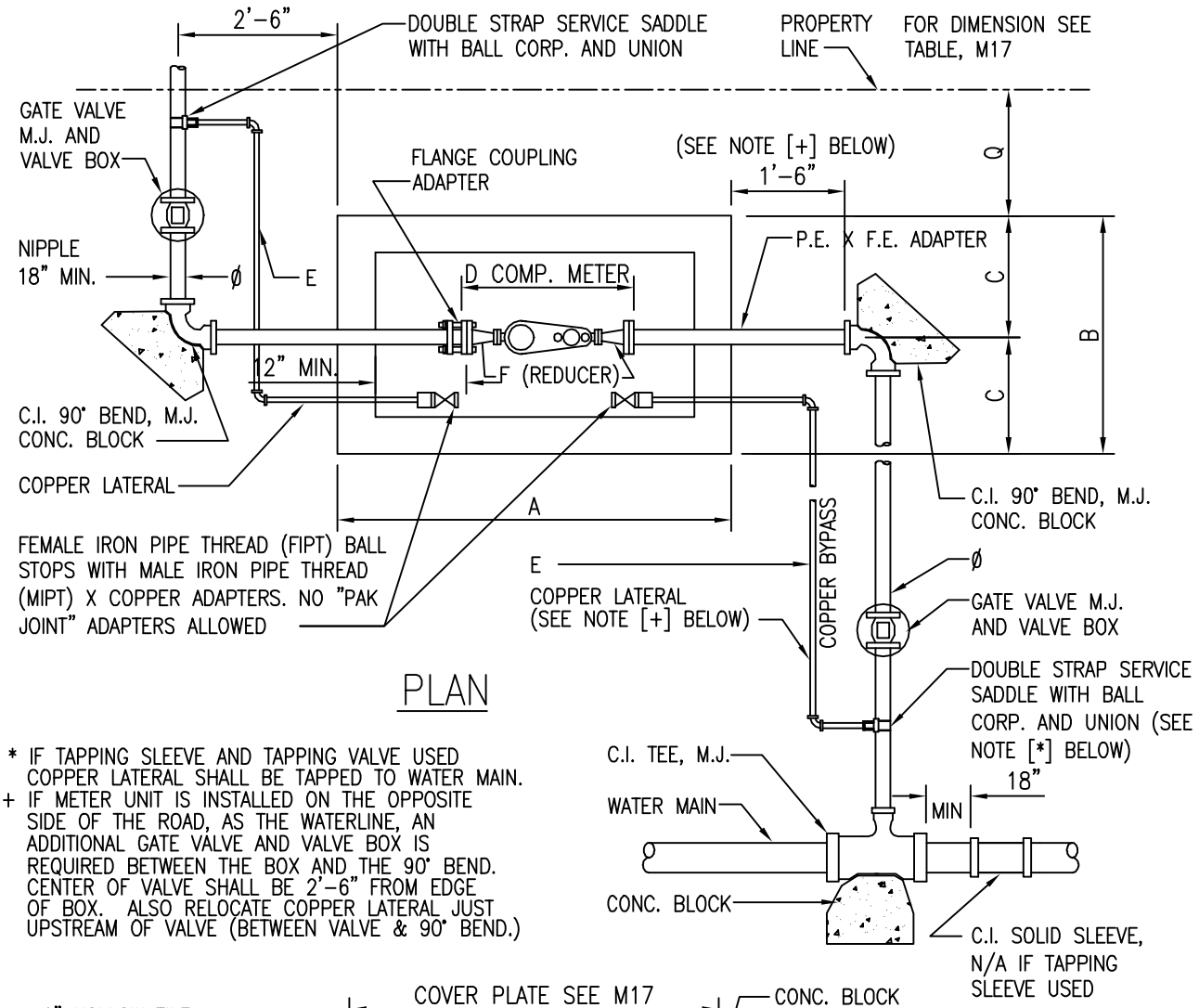

* IF TAPPING SLEEVE AND TAPPING VALVE USED COPPER LATERAL SHALL BE TAPPED TO WATER MAIN.

\+ IF METER UNIT IS INSTALLED ON THE OPPOSITE SIDE OF THE ROAD, AS THE WATERLINE, AN ADDITIONAL GATE VALVE AND VALVE BOX IS REQUIRED BETWEEN THE BOX AND THE 90° BEND. CENTER OF VALVE SHALL BE 2'-6" FROM EDGE OF BOX. ALSO RELOCATE COPPER LATERAL JUST UPSTREAM OF VALVE (BETWEEN VALVE & 90° BEND.)

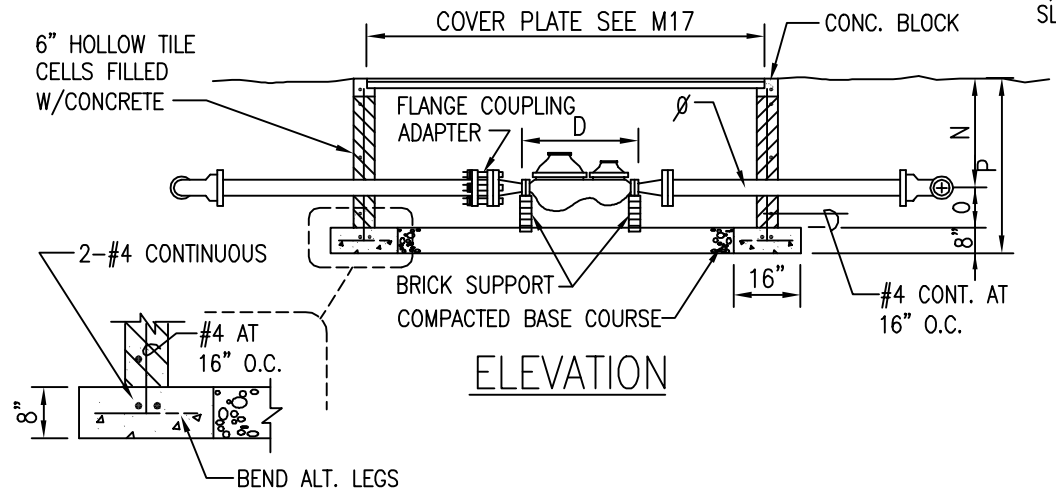

ELEVATION

	2002
	REVISION

HAWAII	COMPOUND METER AND BOX INSTALLATION SCALE: NTS	STANDARD DETAILS	M16

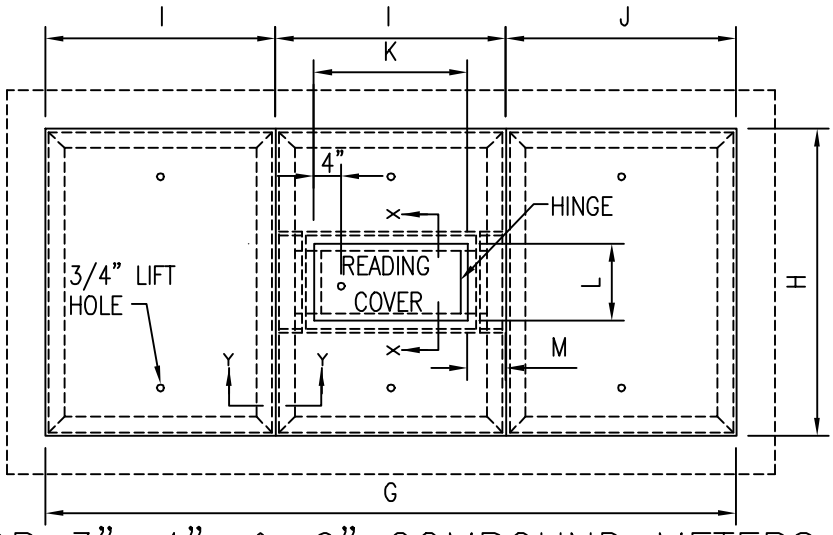

FOR 3", 4", & 6" COMPOUND METERS

DIMENSION TABLE			
METER SIZE (IN INCHES)			
	3	4	6
A	96	96	96
B	48	48	48
C	24	24	24
D	24	29	36 1/2
E	2	2	2 1/2
F	4 x 3	6 x 4	8 x 6
G	88	88	88
H	40	40	40
I	29	29	29
J	30	30	30
K	18	18	18
L	8	8	8
M	4	4	4
N	26	27	28
O	12	12	12
P	46	47	48
Q*	30	30	36
Ø	4	6	8

*= MIN.

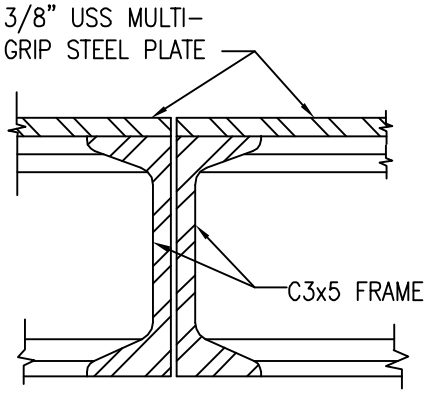

SECTION "Y-Y"

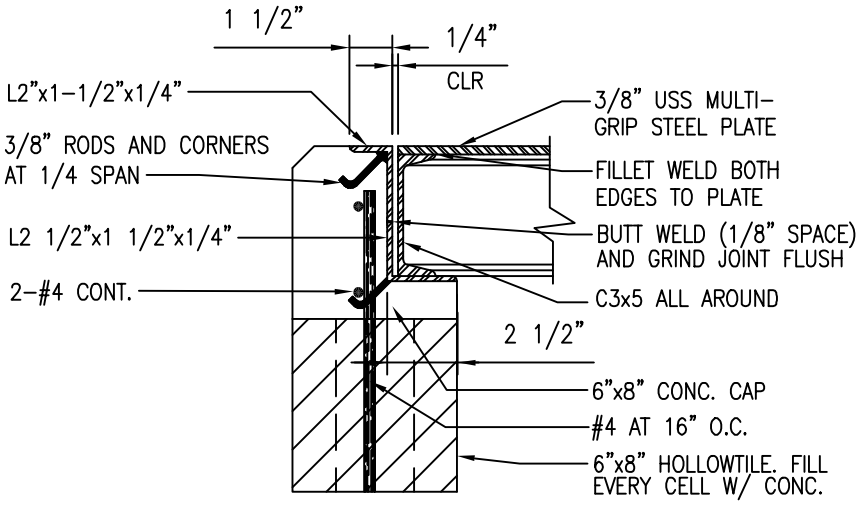

CONCRETE CAP AND FRAME DETAILS

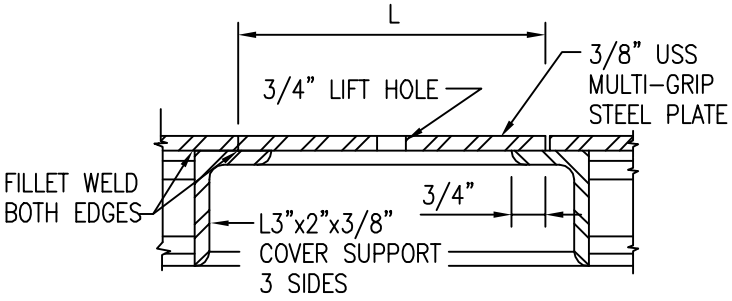

SECTION "X-X"

NOTES:

1. ALL ANGLES, CHANNELS, AND COVER PLATES SHALL BE HOT DIPPED GALVANIZED AFTER FABRICATION.
2. FOR DIMENSIONS, SEE TABLE ABOVE.
3. FOR METER INSTALLATIONS LARGER THAN 6", SUBMIT DRAWINGS TO MANAGER FOR APPROVAL.
4. SEE M15 FOR READING COVER DETAIL.

2002
REVISION

HAWAII	COMPOUND METER COVER DETAILS SCALE: NTS	STANDARD DETAILS	M17

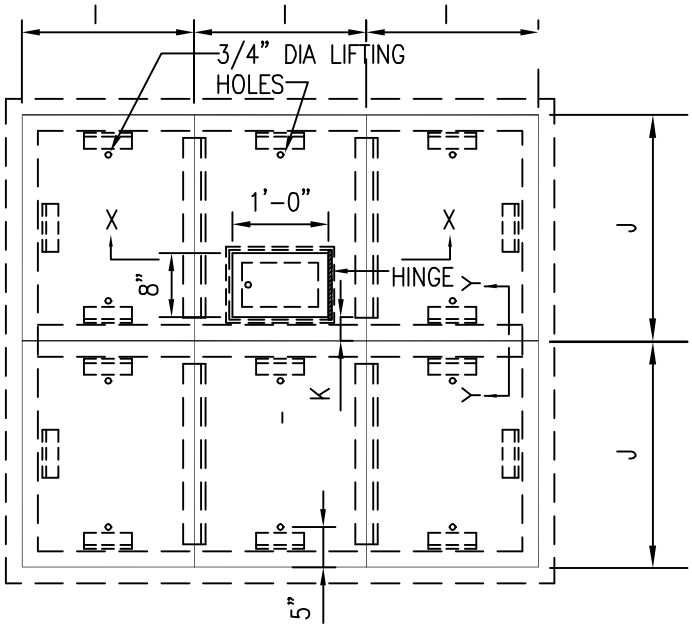

COVER PLATES 10" DC METER

DETECTOR CHECK AND DC VALVE TABLE (IN INCHES)					
	3	4	6	8	10
A	56	56	56	64	72
B	56	56	56	64	64
C	24	24	24	27	27
D	32	32	32	37	37
E	16.5	16.5	22.5	25.0	28.0
F	26	26	27	28	36
G	8	8	12	12	12
H	42	42	47	48	56
I	24.25	24.25	24.25	28.25	21.5
J	24.25	24.25	24.25	28.25	28.25
K	3	3	3	3	3
$L_{(MIN.)}$	18	18	18	18	18
Ø	4	4	6	8	10

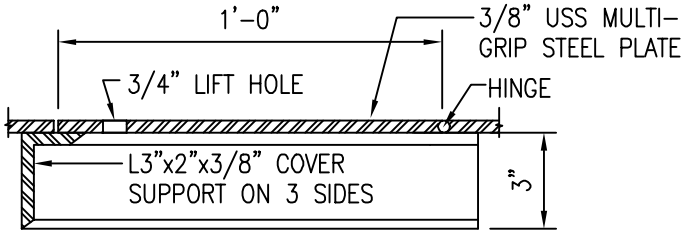

READING COVER SECTION "X-X"

SEE PLATE M15 FOR DETAILS

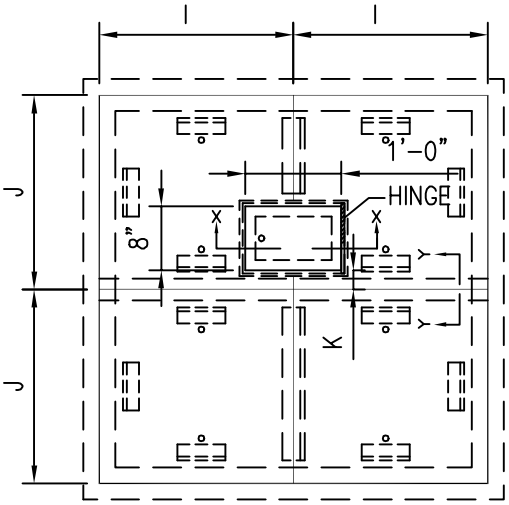

COVER PLATES 3", 4", 6", AND 8" DC METERS

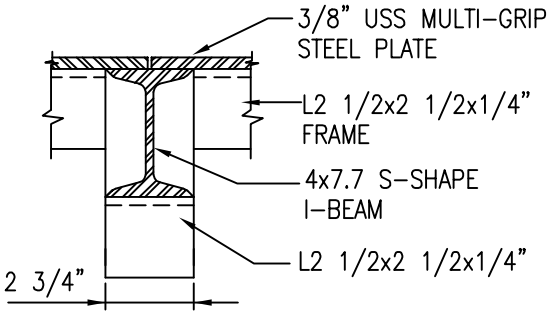

CROSS BEAM SECTION "Y-Y"

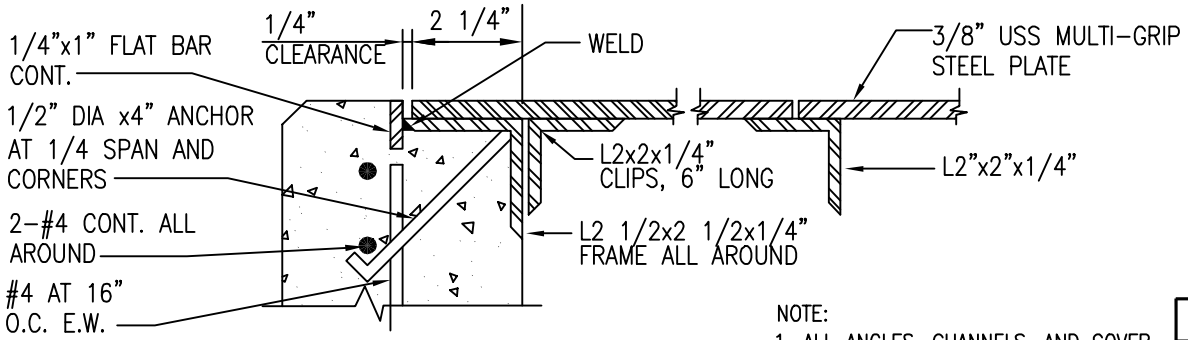

FRAME AND COVER DETAILS

NOTE:
1. ALL ANGLES, CHANNELS, AND COVER PLATES SHALL BE HOT DIPPED GALVANIZED AFTER FABRICATION.

			2002 REVISION
HAWAII	DETECTOR CHECK COVER DETAILS SCALE: NTS	STANDARD DETAILS	M18

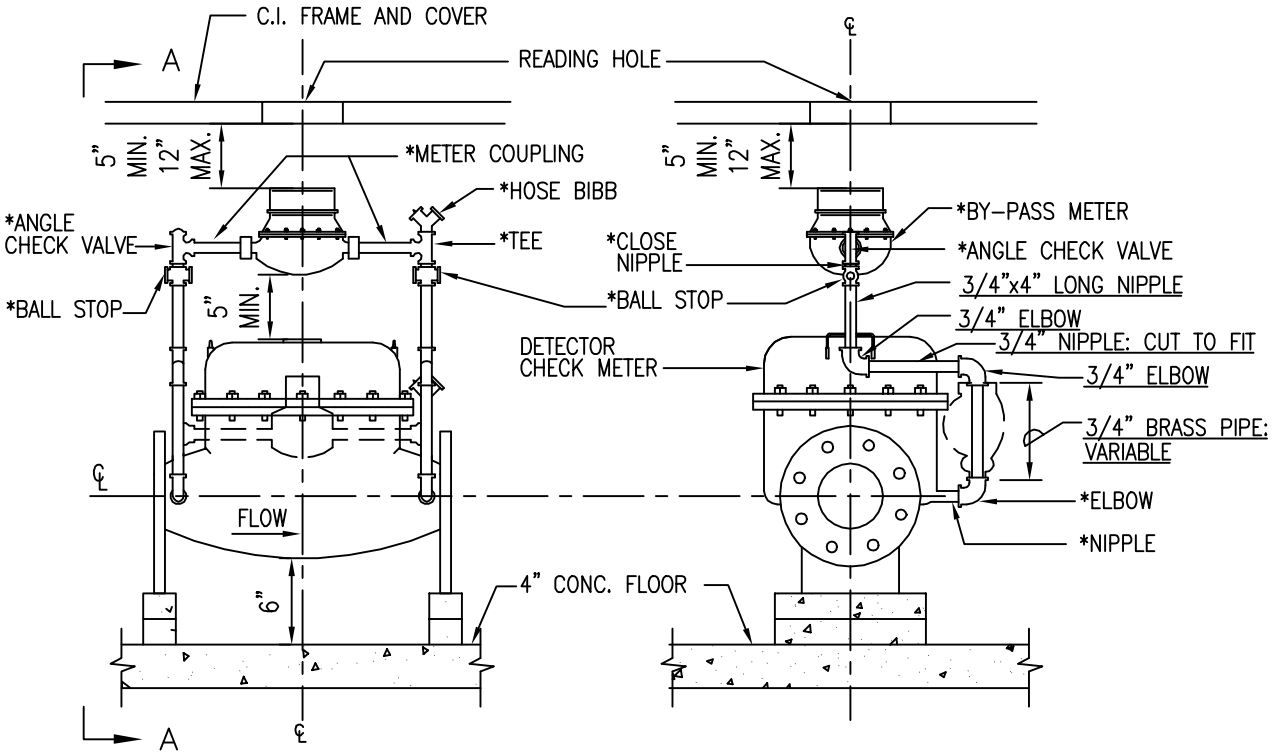

DETECTOR CHECK METER DETAIL

DETAIL OF WORK TO BE DONE BY CONTRACTOR IN ORDER TO RAISE AND CENTER BY-PASS METER

NOTES:

1. ITEMS UNDERLINED TO BE FURNISHED BY CONTRACTOR
2. ALL ITEMS TO BE RED BRASS OR BRONZE.
3. ALL WORK TO BE DONE BY THE CONTRACTOR.
4. (*) THESE ITEMS ARE PART OF DETECTOR CHECK ASSEMBLY.
5. DASHED LINE INDICATES BY-PASS METER LOCATION AS FURNISHED BY MANUFACTURER.
6. BY-PASS PIPING ASSEMBLY SHALL BE CONFIGURED TO CENTER THE BY-PASS METER UNDER THE READING COVERS.

			2002
			REVISION
OAHU HAWAII	DETECTOR CHECK METER DETAILS SCALE: NTS	STANDARD DETAILS	M19

FOR DIMENSIONS, SEE TABLE, M18

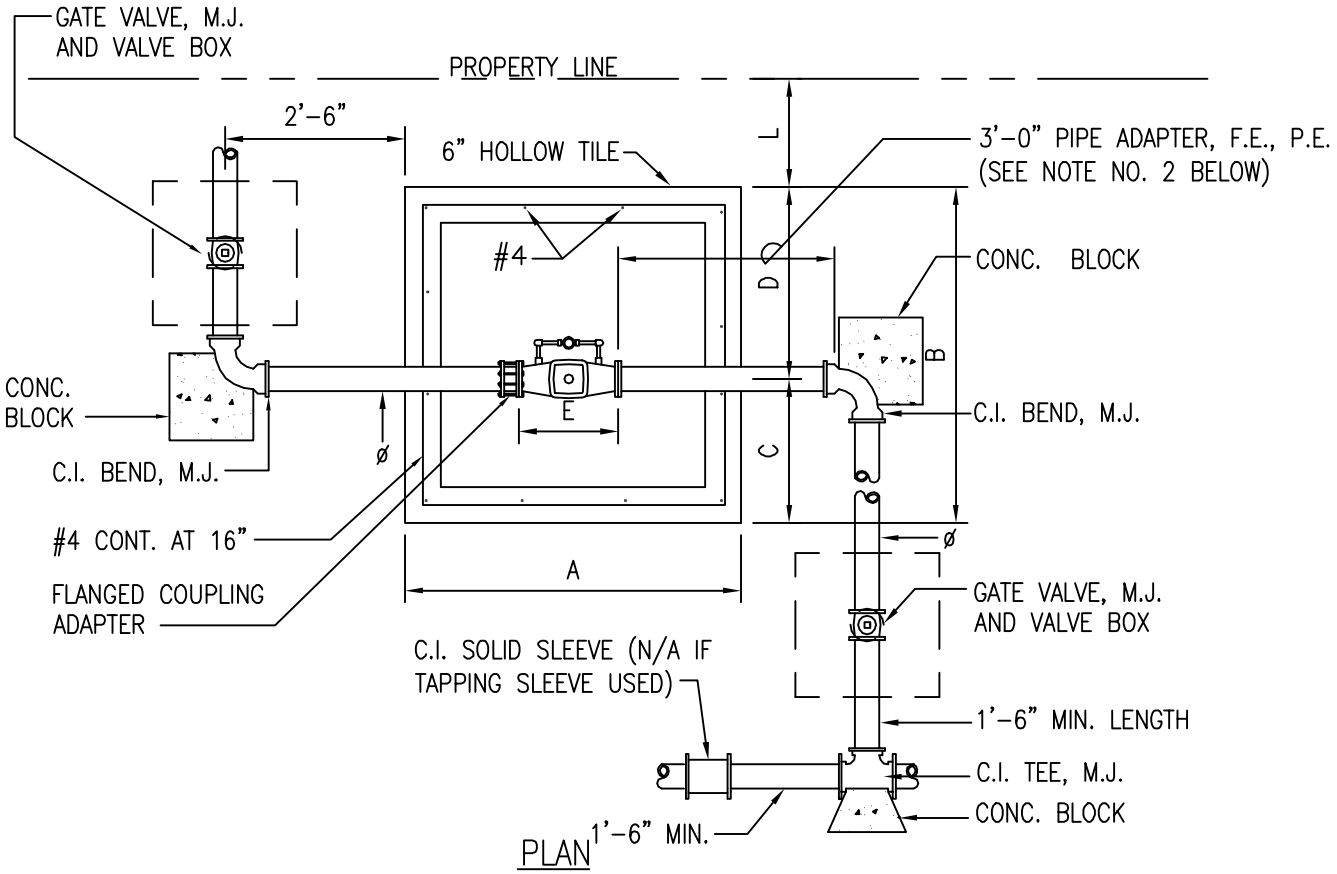

PLAN

NOTES:

1. TAPPING SLEEVE AND TAPPING VALVE MAY BE USED WITH THE APPROVAL OF THE MANAGER.
2. FOR 3" DC METER INSTALLATIONS A 3" X 4" F.E. REDUCER SHALL BE INSTALLED AT BOTH ENDS OF DC METER.

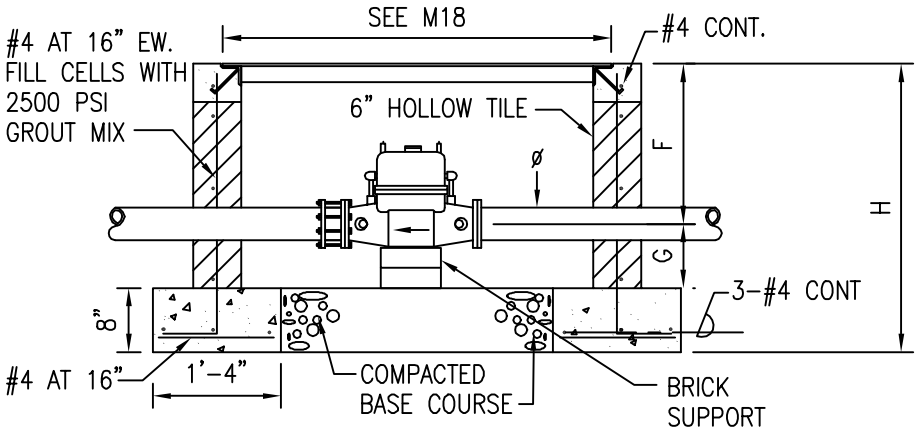

ELEVATION

			2002
			REVISION
HAWAII	MODEL DC DETECTOR CHECK INSTALLATION SCALE: NTS	STANDARD DETAILS	M20

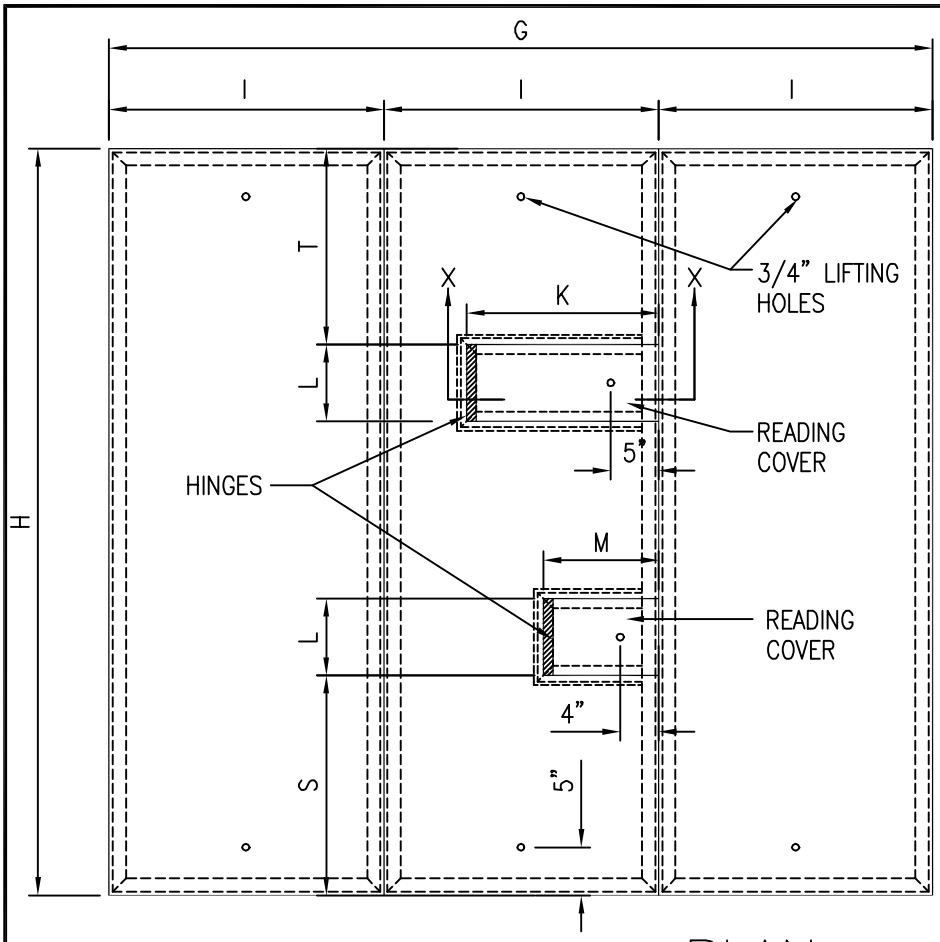

PLAN

NOTES:

1. READING COVERS SHALL BE LOCATED DIRECTLY OVER THE METER REGISTERS. LOCATIONS WILL VARY W/ THE TYPE OF METER TO BE INSTALLED.
2. SEE M15 FOR READING COVER DETAILS.
3. ALL ANGLES, CHANNELS, & COVER PLATES SHALL BE HOT DIPPED GALV. AFTER FABRICATION.
4. FOR 2-1/2" COPPER BYPASS LINES, INSTALL 2" BALL CORP. WITH APPROPRIATE 2"x2-1/2" FITTINGS.

DIMENSION TABLE				
METER SIZE (IN INCHES)				
	3	4	6	8
A	80	80	96	96
B	72	72	80	88
C	28	28	28	32
C	44	44	52	56
D	33	33	45	53
E	2	2	2 1/2	2 1/2
F	4 x 3	6 x 4	8 x 6	12 x 8
G	69 3/4	69 3/4	85 3/4	85 3/4
H	61 3/4	61 3/4	69 3/4	77 3/4
I	23 1/4	23 1/4	28 5/8	28 5/8
J	18	18	20	16
K	15	15	15	20
L	8	8	8	8
M	12	12	12	12
N	26	27	28	36
O	16	17	18	19 1/2
P	50	52	54	63 1/2
Q	30	30	30	30
R	2	2	2	2
S	18 7/8	18 7/8	18 7/8	22 7/8
T	18 1/8	17 1/8	21 1/4	20 3/8
Ø	4	6	8	12

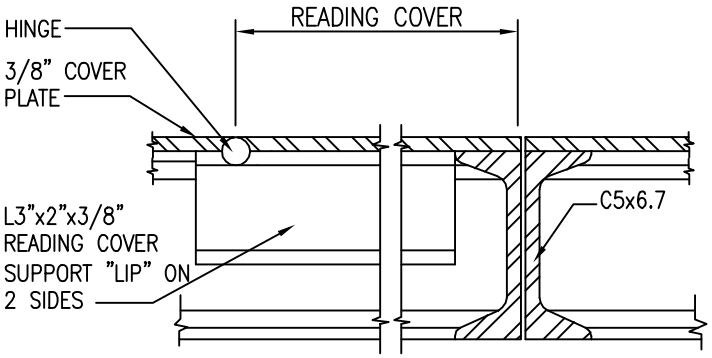

SECTION X-X

	2002
	REVISION

HAWAII	MFM-MCT METER AND BOX INSTALLATION SCALE: NTS	STANDARD DETAILS	M21

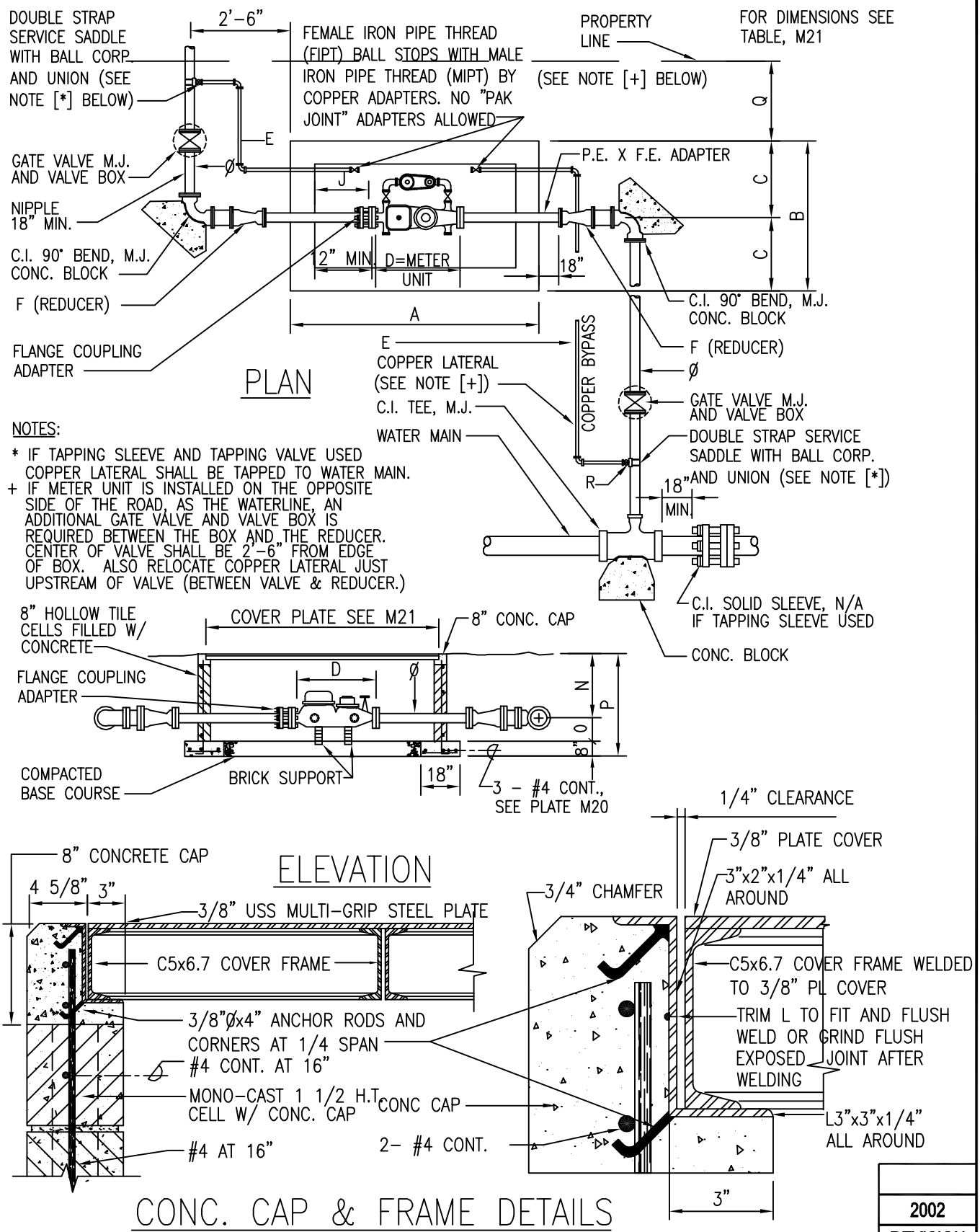

NOTES:

* IF TAPPING SLEEVE AND TAPPING VALVE USED COPPER LATERAL SHALL BE TAPPED TO WATER MAIN.

\+ IF METER UNIT IS INSTALLED ON THE OPPOSITE SIDE OF THE ROAD, AS THE WATERLINE, AN ADDITIONAL GATE VALVE AND VALVE BOX IS REQUIRED BETWEEN THE BOX AND THE REDUCER. CENTER OF VALVE SHALL BE 2'-6" FROM EDGE OF BOX. ALSO RELOCATE COPPER LATERAL JUST UPSTREAM OF VALVE (BETWEEN VALVE & REDUCER.)

			2002
			REVISION
HAWAII	**MFM-MCT METER AND BOX** **INSTALLATION** **SCALE: NTS**	STANDARD DETAILS	M22

NOTES:

1. MANHOLE MAY BE PRECAST, CAST-IN-PLACE, OR BLOCK.
2. FOR CMU MANHOLE REINFORCEMENT, SEE STANDARD DETAIL MH12.
3. FOR BOND BEAM AND METAL MANHOLE COVER DETAILS, SEE STANDARD PLATE M11.
4. BYPASS METER SHALL BE RADIO READ TYPE MANU-FACTURED BY BADGER METER INC., OR OTHER AS REQUIRED BY DWS.

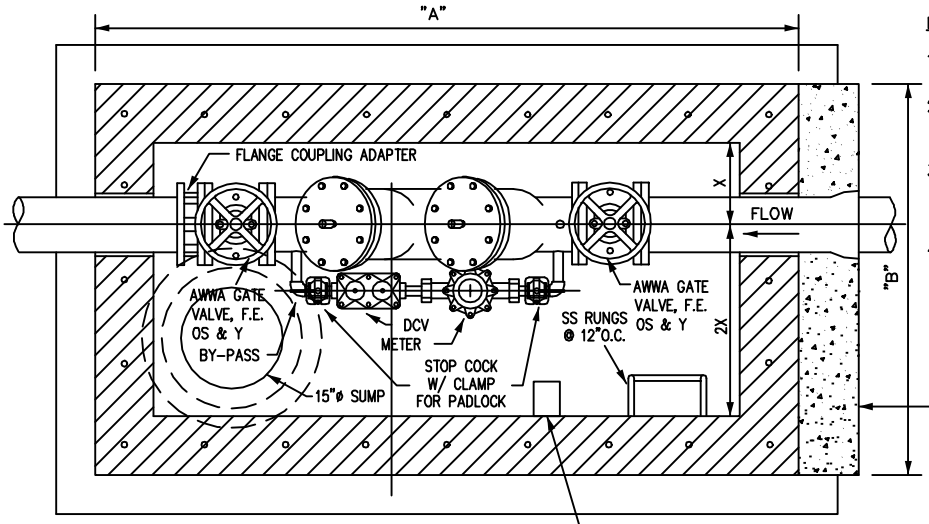

PLAN SECTION

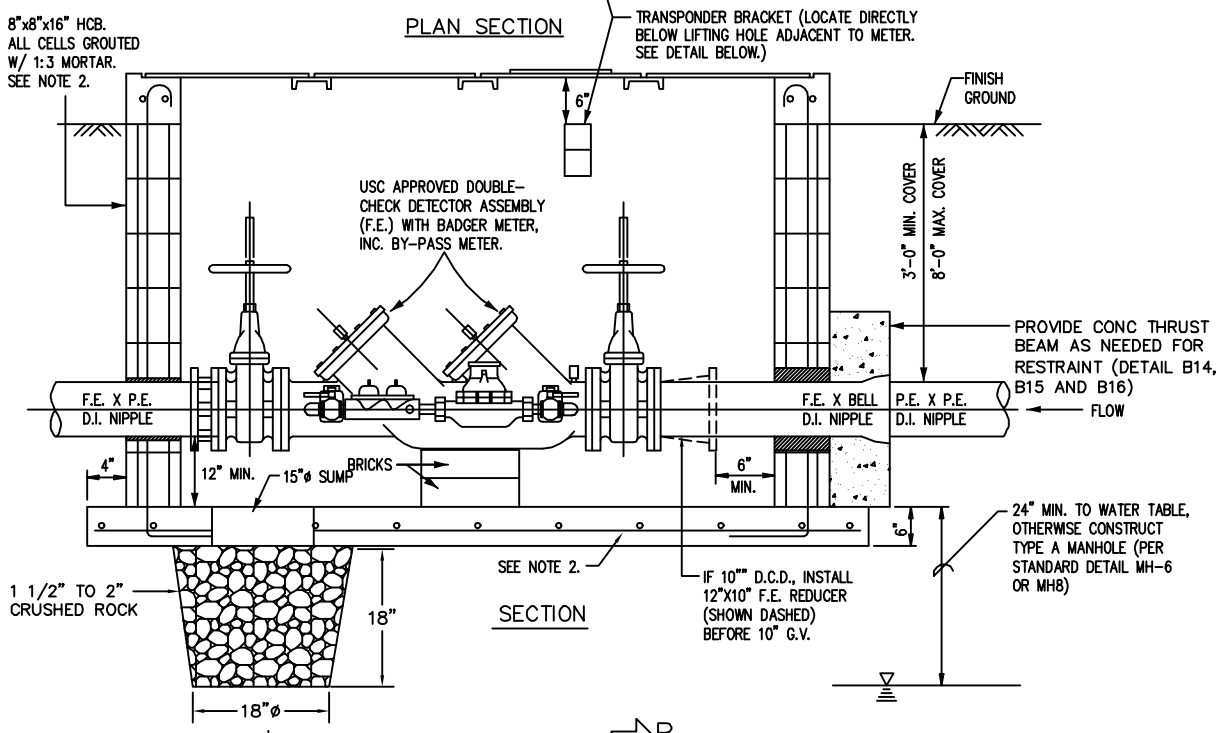

SECTION

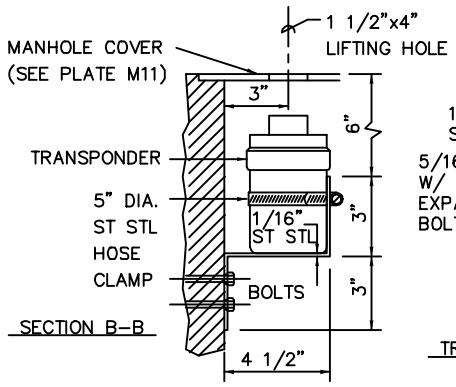

SECTION B-B

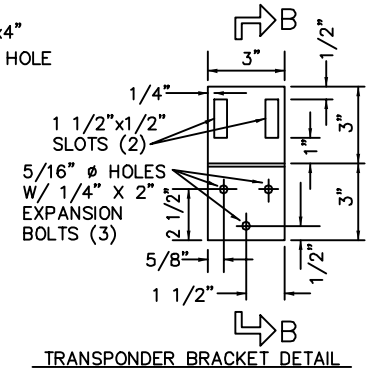

TRANSPONDER BRACKET DETAIL
NO SCALE

D.C.D. SIZE	MANHOLE SIZE	
	A	B
10"	12'-0"	6'-8"
8"	9'-4"	6'-0"
6"	8'-0"	5'-4"
4"	6'-8"	4'-8"
& SMALLER	6'-8"	4'-8"

2002
REVISION

MAUI

DOUBLE-CHECK DETECTOR ASSEMBLY

NON-TRAFFIC MANHOLE

SCALE: NTS

STANDARD DETAILS

M23

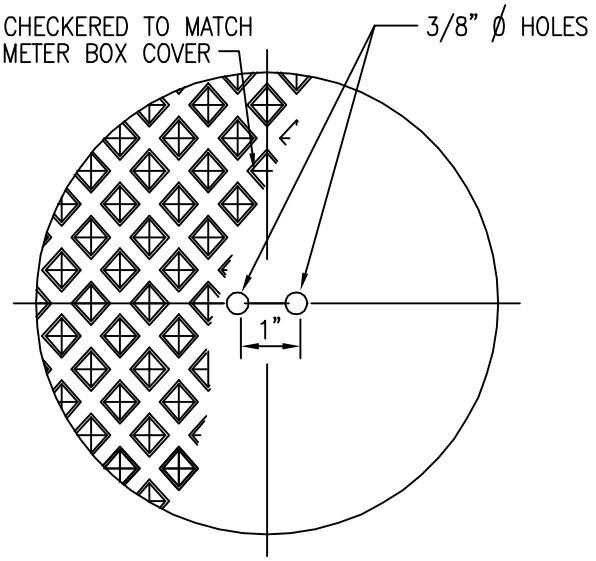

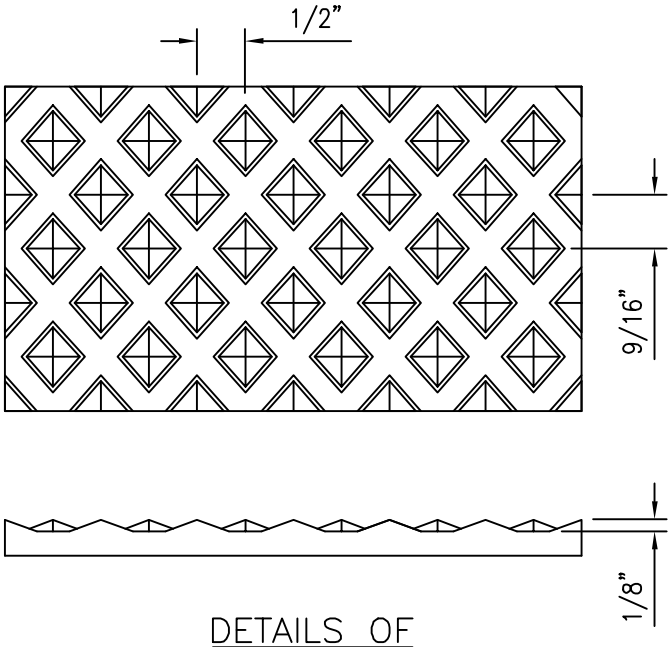

DETAILS OF
RAISED
SURFACE

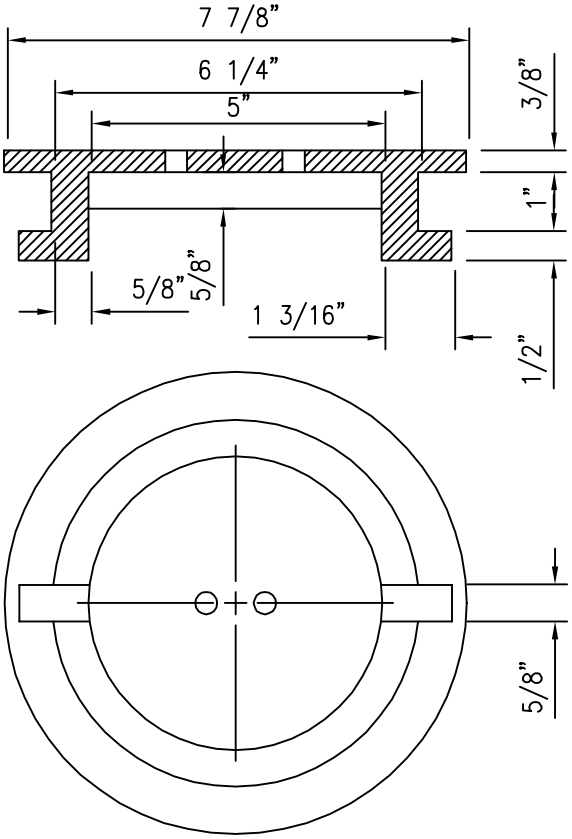

CAST IRON READING-HOLE COVER

	2002
	REVISION

KAUAI OAHU	READING HOLE COVER RAISED SURFACE DETAIL SCALE: NTS	STANDARD DETAILS	M24

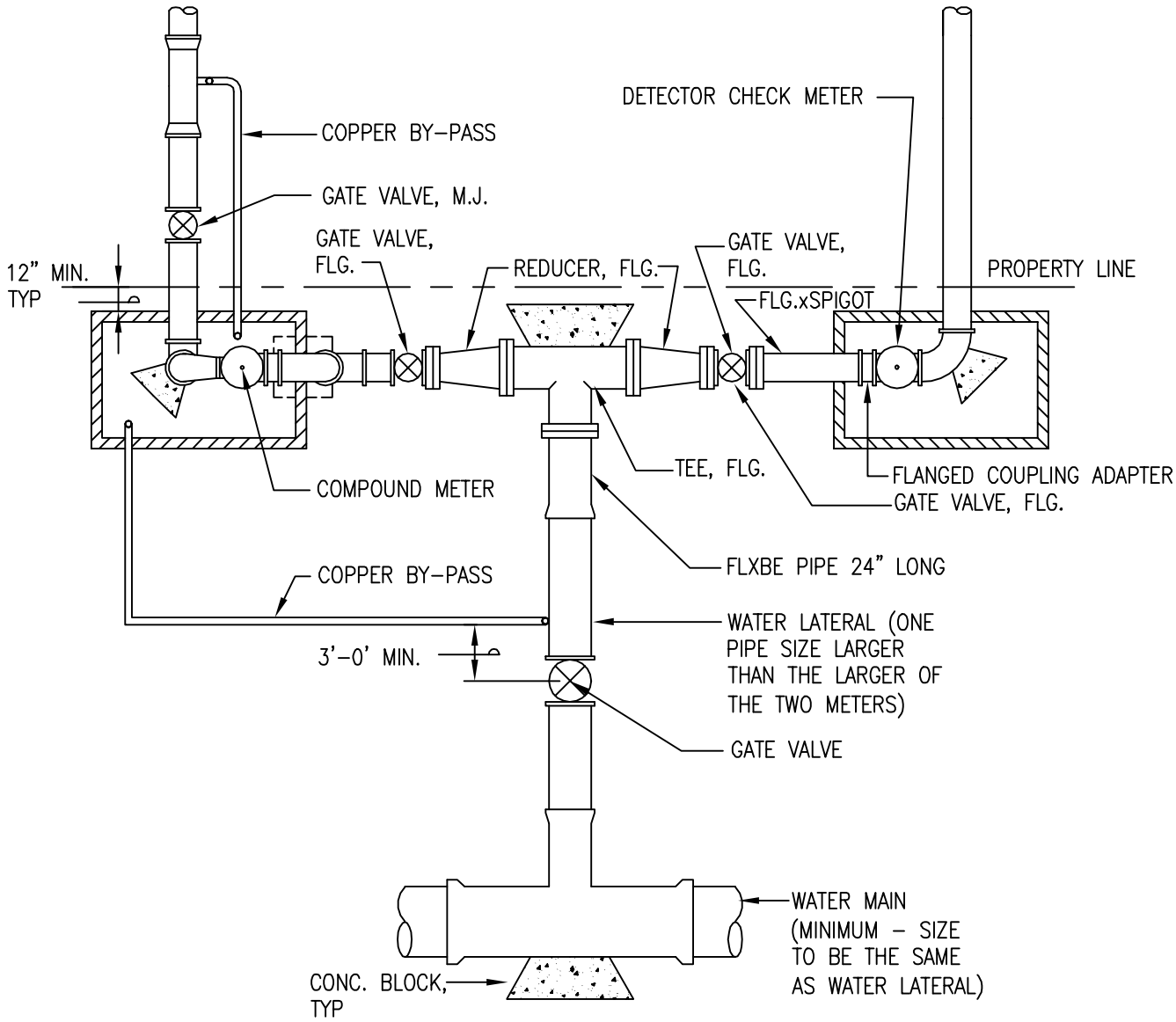

COMBINATION OF SINGLE COMPOUND
AND SINGLE DETECTOR CHECK METERS

NOTE:

1. REFER TO M19, M30 AND M31 FOR DETECTOR CHECK METER INSTALLATION DETAILS.
2. REFER TO M27 - M29 FOR COMPOUND METER INSTALLATION DETAILS.
3. INSTALL ADDITIONAL FLANGED SPOOLS, AS REQUIRED.

	2002
	REVISION

OAHU	COMBINATION OF SINGLE COMPOUND AND SINGLE DETECTOR CHECK METERS SCALE: NTS	STANDARD DETAILS	M25

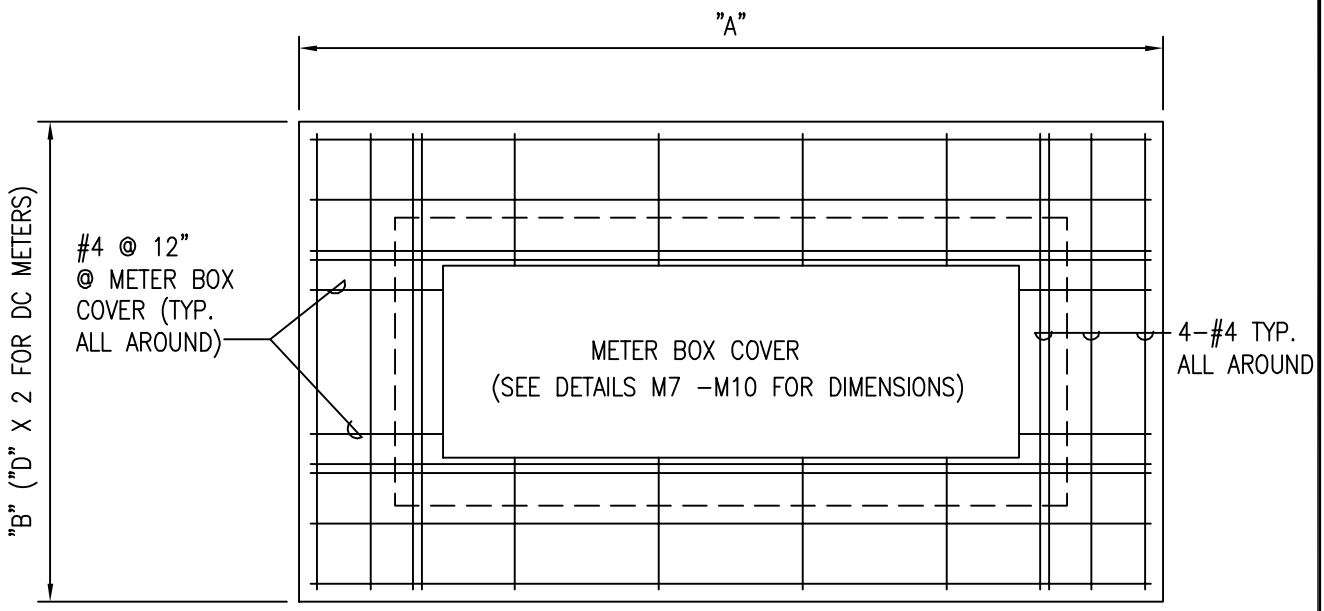

PLAN

NOTES:

1. REFER TO THE FOLLOWING DETAILS FOR BOX DIMENSIONS: M27–M29 FOR COMPOUND METERS, M19, M30 & M31 FOR DC METERS, M32 & M33 FOR TURBINE METERS.
2. CONCRETE SHALL BE DWS 3500.
3. REINFORCING STEEL SHALL BE ASTM A615 GRADE 60.
4. DESIGN IS BASED ON: 250 PSF LIVE LOAD; 0 SURCHARGE; 60 PCF/FT AT REST PRESSURE; AND WATER TABLE BELOW BOTTOM SLAB, PER AASHTO LRFD BRIDGE DESIGN SPECIFICATIONS (1998). NON–TRAFFIC TYPE.
5. FOR CMU WALL: INSTALL 8" CMU W/ #5 @ 16" E.W. CENTERED. SEE MH12 FOR ADDITIONAL DETAIL.

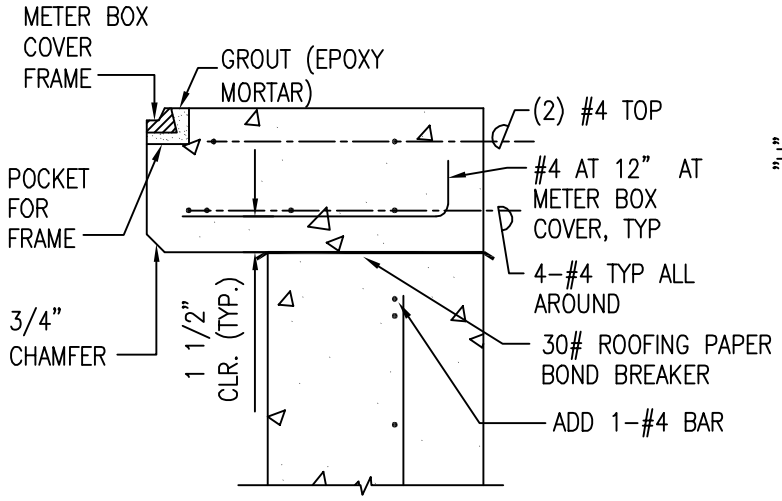

DETAIL "A"

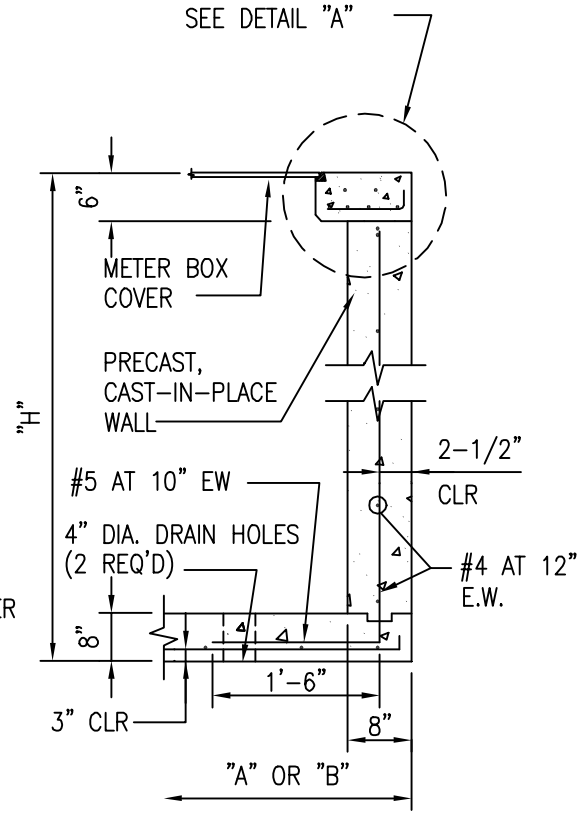

TYPICAL SECTION

	2002
	REVISION

OAHU	**METER BOX DETAIL** **FOR COMPOUND, DC AND TURBINE METERS** **SCALE: NTS**	STANDARD DETAILS	M26

MATERIALS FOR TESTING AS REQ'D

1-BLIND FLANGE WITH CLEANOUT OR
1-BLIND SPLICE

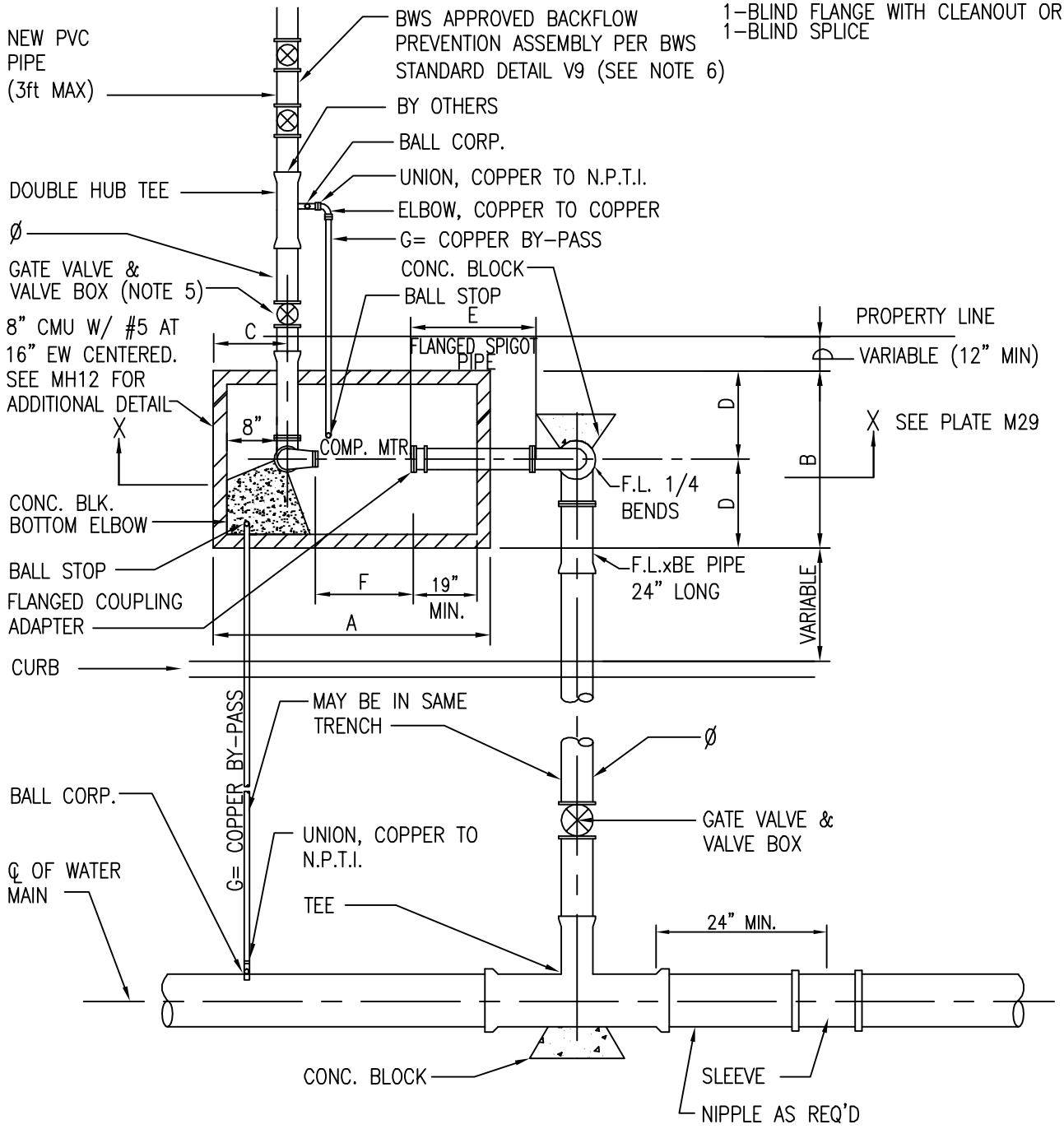

MATERIALS FOR TESTING AS REQ'D

1-SLEEVE
1-CAP WITH CLEANOUT
8-L.F. CONNECTING PIPE

NOTE:

1. SEE TABLE ON M28 FOR DIMENSIONS BASED ON METER SIZE.
2. TAPPING SLEEVE/ TAPPING VALVE ASSEMBLY MAY BE USED.
3. ALL PIPING SHALL BE DUCTILE IRON PIPE UNLESS OTHERWISE NOTED.
4. MIN. DISTANCE OF TAP FOR BY-PASS TO TEE SHALL BE 36" CENTER TO CENTER.
5. OUTLET GATE VALVE MUST REMAIN
6. BACKFLOW PREVENTION ASSEMBLY TYPE TO BE DETERMINE BY BWS, IF REQUIRED.

			2002
			REVISION
OAHU	SINGLE COMPOUND METER INSTALLATION PLAN SCALE: NTS	STANDARD DETAILS	M27

NOTES:

1. SEE M7, M8, M9 AND M10 FOR METER BOX FRAME AND COVER DETAILS. SEE M26 FOR METER BOX DETAIL.
2. THE PROJECT SHALL PAY THE APPLICABLE WATER SYSTEM FACILITIES CHARGE AND FOR THE METER WHICH WILL BE FURNISHED BY BWS AND INSTALLED BY THE CONTRACTOR WHEN THE LATERAL IS INSTALLED.
3. LOCATE BY-PASS BALL STOPS IN METER BOX WITH ENOUGH SPACE BETWEEN METER AND WALL FOR TEMPORARY BY-PASS STANDPIPE TO BE HOOKED UP.
4. ELIMINATE 4" DRAINHOLES FOR WATERPROOFED MANHOLES.
5. CONTRACTOR SHALL NOTIFY CUSTOMER SERVICE DIVISION IN WRITING AFTER THE PLAN IS APPROVED, NO LATER THAN 120 DAYS, PRIOR TO WITHDRAWING METER FROM THE BWS STOREYARD. SUCH NOTICE SHALL INDICATE NUMBER, SIZE, AND TYPE OF METER AND APPROXIMATE MONTH AND YEAR METER IS ANTICIPATED TO BE DRAWN OUT. IF THE APPROVED PLAN IS ALLOWED TO LAPSE, THE 120-DAY NOTICE WILL BE VOIDED.
6. ALL METERS SHALL BE INSTALLED IN THE CONCRETE OR DIRT SIDEWALK AREA WITH CONCRETE SLAB (SEE PLATE M43).

	COMPOUND METERS		
METER CODE	09	12	15
FLOW RATE (GPM)	320	500	1000
METER SIZE	3"	4"	6"
A	7'-2"	7'-5"	7'-11"
B	4'-0"	4'-6"	4'-6"
C	1'-8 1/2"	1'-9 1/2"	1'-10 3/4"
D	2'-0"	2'-3"	2'-3"
E	3'-6"	3'-6"	3'-0"
F	2'-0"	2'-5"	3'-0 1/2"
G	2"	2 1/2"	2 1/2"
H	2'-9 1/4"	3'-1"	3'-6"
J	1'-6 1/4"	1'-8 1/2"	1'-11 1/2"
K	2'-6 3/4"	2'-11 1/2"	3'-4 1/2"
L	24" X 42"	24" X 42"	36" X 52"
M	15 1/4"	15 1/4"	15"
N	1"	7/8"	1/2"
Ø	4"	4" OR 6"	6" OR 8"

2002
REVISION

OAHU

SINGLE COMPOUND METER
INSTALLATION-NOTES AND TABLES
SCALE: NTS

STANDARD DETAILS

M28

OAHU

SINGLE COMPOUND METER

INSTALLATION-SECTION

SCALE: NTS

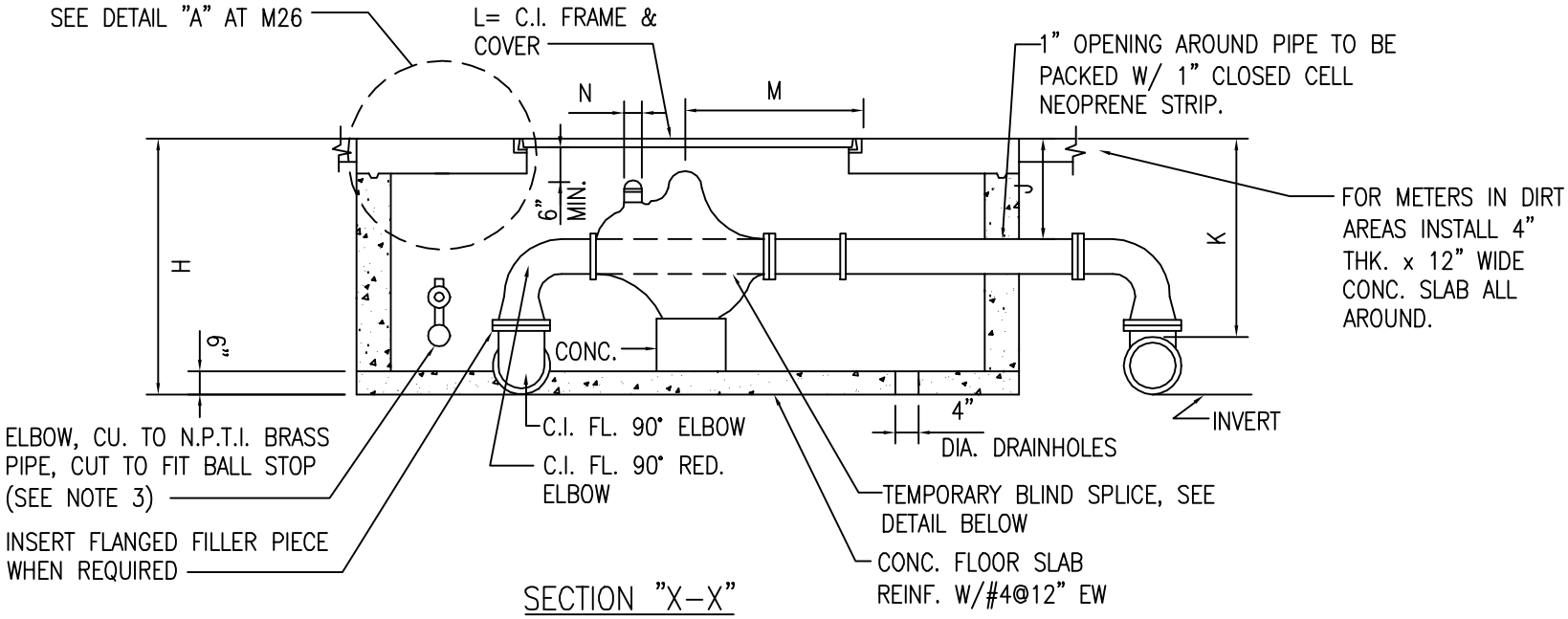

SECTION "X-X"

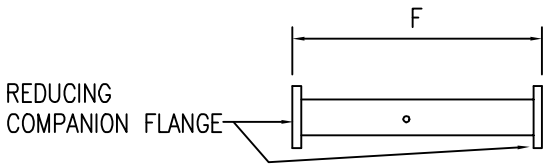

SEE M28 FOR NOTES AND TABLE

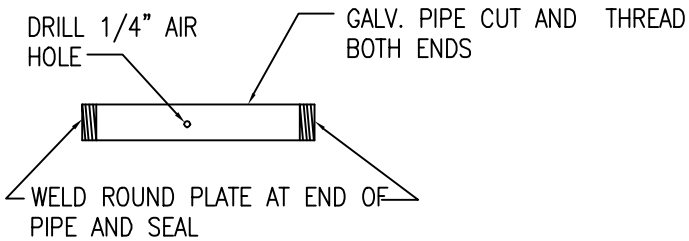

DETAIL OF TEMPORARY BLIND SPLICE

STANDARD DETAILS

M29

REVISION 2002

MATERIALS FOR TESTING AS REQUIRED:
1– BLIND FLANGE WITH CLEANOUT OR,
1– BLIND SPLICE

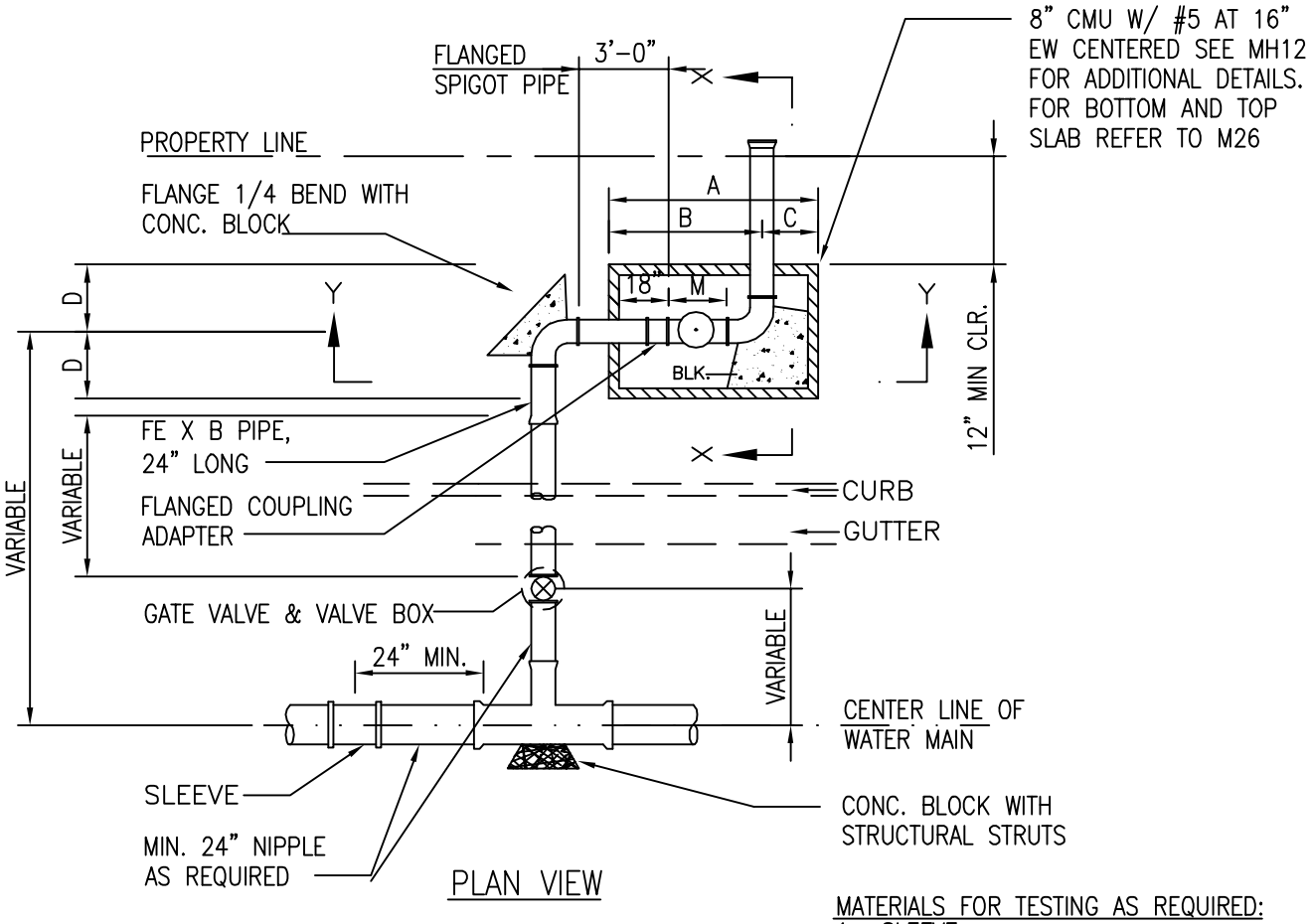

MATERIALS FOR TESTING AS REQUIRED:
1– SLEEVE
1– CAP WITH CLEANOUT
8 L.F. CONNECTING PIPE

NOTES:

1. ALL METERS SHALL BE INSTALLED IN THE CONCRETE OR DIRT SIDEWALK AREA WITH CONCRETE SLAB (SEE PLATE M43).
2. CONTRACTOR SHALL NOTIFY CUSTOMER SERVICE DIVISION IN WRITING AFTER PLAN IS APPROVED, NO LATER THAN 120 DAYS, PRIOR TO WITHDRAWING METER THE FROM THE BWS STOREYARD. SUCH NOTICE SHALL INDICATE NUMBER, SIZE, AND TYPE OF METER AND APPROXIMATE MONTH AND YEAR METER IS ANTICIPATED TO BE DRAWN OUT. IF THE APPROVED PLAN IS ALLOWED TO LAPSE, THE 120–DAY NOTICE WILL BE VOIDED.
3. THE PROJECT SHALL PAY THE APPLICABLE ONE–TIME SERVICE CHARGE AND FOR THE METER WHICH WILL BE FURNISHED BY BWS AND INSTALLED BY THE CONTRACTOR WHEN THE LATERAL IS INSTALLED.
4. TAPPING SLEEVE/ TAPPING VALVE ASSEMBLY MAY BE USED.
5. FOR DETAILS, SECTIONS AND TABLE SEE PLATES M19 AND M31.
6. CONCRETE SHALL BE DWS 3500.
7. REINFORCING STEEL SHALL BE ASTM A615 GRADE 60.
8. DESIGN IS BASED ON: 250 PSF LIVE LOAD; 0 SURCHARGE; 60 PCF/FT AT REST PRESSURE; AND WATER TABLE BELOW BOTTOM SLAB, PER AASHTO LRFD BRIDGE DESIGN SPECIFICATIONS (1998). NON–TRAFFIC TYPE.
9. SEE DETAIL M26 FOR METER BOX DETAIL.

	2002
	REVISION

OAHU	**SINGLE DETECTOR** **CHECK METER INSTALLATION** SCALE: NTS	STANDARD DETAILS	M30

OAHU

SINGLE DETECTOR
CHECK METER INSTALLATION

SCALE: NTS

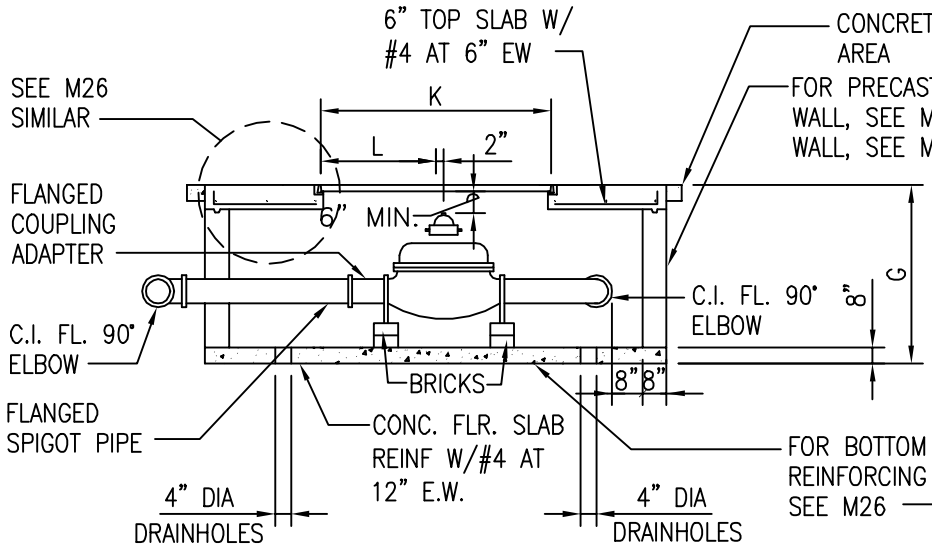

SECTION "Y–Y"

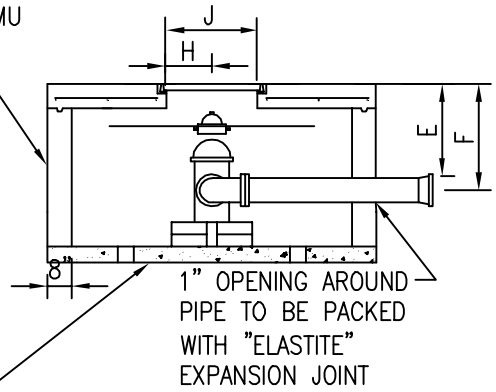

SECTION "X–X"

METER	A SIZE	B	C	D	E (MIN.)	F (MIN.)	G (MIN.)	H	CI F & C J	CI F & C K	L	M
4"x 5/8"	5'–9 1/2"	4'–1"	1'–8 1/2"	2'–0"	2'–0"	2'–2 1/2"	3'–4 1/2"	1'–0"	24"	42"	15 3/4"	1'–4 1/2"
6"x 5/8"	6'–6"	4'–8 1/2"	1'–9 1/2"	2'–3"	2'–3"	2'–6 1/2"	3'–9 1/2"	1'–0"	36"	52"	15 3/4"	1'–10 1/2"
8"x5/8"	7'–1/4"	5'–1 1/2"	1'–10 3/4"	2'–8"	2'–9"	3'–1 1/2"	4'–6"	1'–6"	36"	52"	23"	2'–2 1/2"

NOTES:

1. MAX. DEPTH FOR "E", "F", & "G" SHALL BE 1'–0" MORE THAN SHOWN IN TABLE.

STANDARD DETAILS

M31

REVISION 2002

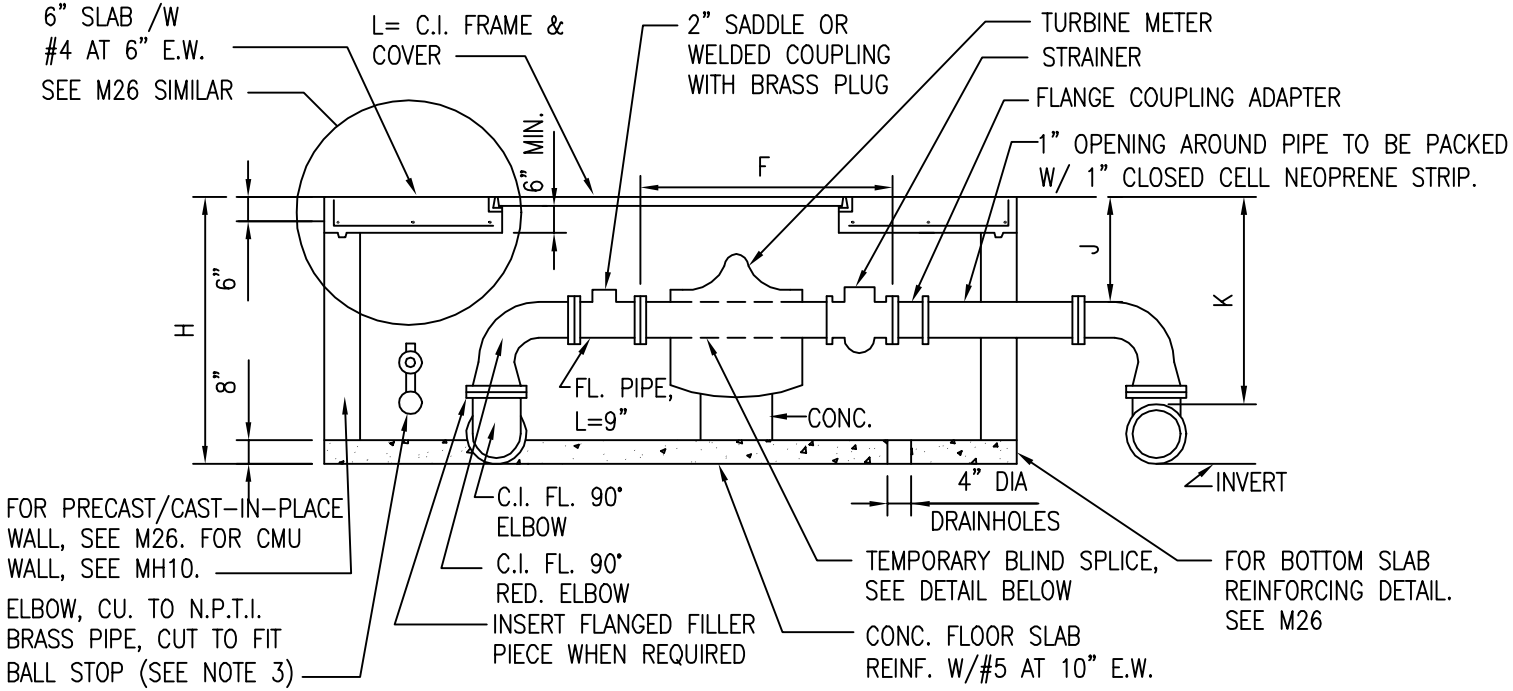

SECTION "X-X"

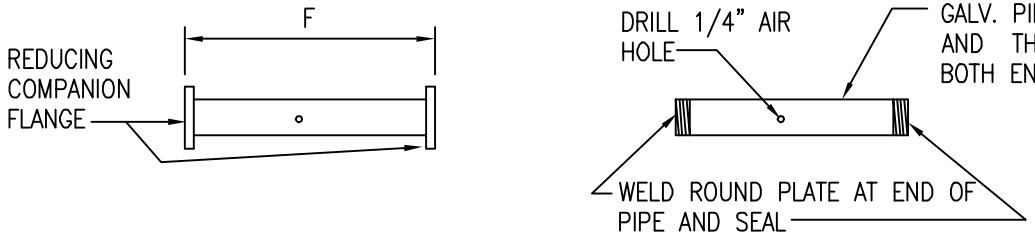

SEE PLATE M33 FOR
NOTES AND TABLE

DETAIL OF TEMPORARY BLIND SPLICE

OAHU

TURBINE METER
INSTALLATION-SECTION
SCALE: NTS

STANDARD
DETAILS

M32

2002
REVISION

NOTES:

1. SEE M7, M8, M9 AND M10 FOR METER BOX FRAME AND COVER DETAILS. SEE DETAIL M26 FOR METER BOX DETAIL.
2. THE PROJECT SHALL PAY THE APPLICABLE WATER SYSTEM FACILITIES CHARGE AND FOR THE METER WHICH WILL BE FURNISHED BY BWS AND INSTALLED BY THE CONTRACTOR WHEN THE LATERAL IS INSTALLED.
3. LOCATE BY-PASS BALL STOP IN METER BOX WITH ENOUGH SPACE BETWEEN METER AND WALL FOR TEMPORARY BY-PASS STANDPIPE TO BE HOOKED UP.
4. ELIMINATE 4" DRAINHOLES FOR WATERPROOFED MANHOLES.
5. CENTER DIAL UNDER READING COVER.
6. CONTRACTOR SHALL NOTIFY CUSTOMER SERVICE DIVISION IN WRITING AFTER THE PLAN IS APPROVED, NO LATER THAN 120 DAYS, PRIOR TO WITHDRAWING METER FROM THE BWS STOREYARD. SUCH NOTICE SHALL INDICATE NUMBER, SIZE, AND TYPE OF METER AND APPROXIMATE MONTH AND YEAR METER IS ANTICIPATED TO BE DRAWN OUT. IF THE APPROVED PLAN IS ALLOWED TO LAPSE, THE 120-DAY NOTICE WILL BE VOIDED.
7. ALL METERS SHALL BE INSTALLED IN THE CONCRETE OR DIRT SIDEWALK AREA WITH CONCRETE SLAB. (SEE PLATE M43)
8. CONCRETE SHALL BE DWS 3500.
9. REINFORCING STEEL SHALL BE ASTM A615 GRADE 60.
10. DESIGN IS BASED ON: 250 PSF LIVE LOAD; 0 SURCHARGE; 60 PCF/FT AT REST PRESSURE; AND WATER TABLE BELOW BOTTOM SLAB, PER AASHTO LRFD BRIDGE DESIGN SPECIFICATIONS (1998). NON-TRAFFIC TYPE.
11. SPECIAL INSPECTION SHALL BE PROVIDED DURING CONSTRUCTION FOR CMU WALL.
12. STRUCTURAL STEEL SHAPES SHALL BE ASTM A-36. HOT DIP GALVANIZED AFTER FABRICATION.

	TURBINE METERS			
	3"	4"	6"	8"
A	7'-2"	7'-5"	7'-11"	8'-7"
B	4'-0"	4'-6"	4'-6"	4'-6"
C	1'-8 1/2"	1'-9 1/2"	1'-10 3/4"	1'-11"
D	2'-0"	2'-3"	2'-3"	2'-3"
E	3'-6"	3'-6"	3'-0"	3'-0"
F	1'-6"	1'-9 1/2"	2'-3"	2'-6"
G	2"	2 1/2"	2 1/2"	2 1/2"
H	2'-9 1/4"	3'-1"	3'-6"	3'-7"
J	1'-6 1/4"	1'-8 1/2"	1'-11 1/2"	1'-3"
K	2'-6 3/4"	2'-11 1/2"	3'-4 1/2"	2'-10 1/2"
L	24" X 42"	24" X 42"	36" X 52"	36" X 52"
Ø	4"	4" OR 6"	6" OR 8"	8" OR 12"

2002
REVISION

OAHU

TURBINE METER
INSTALLATION-NOTES AND TABLES
SCALE: NTS

STANDARD DETAILS

M33

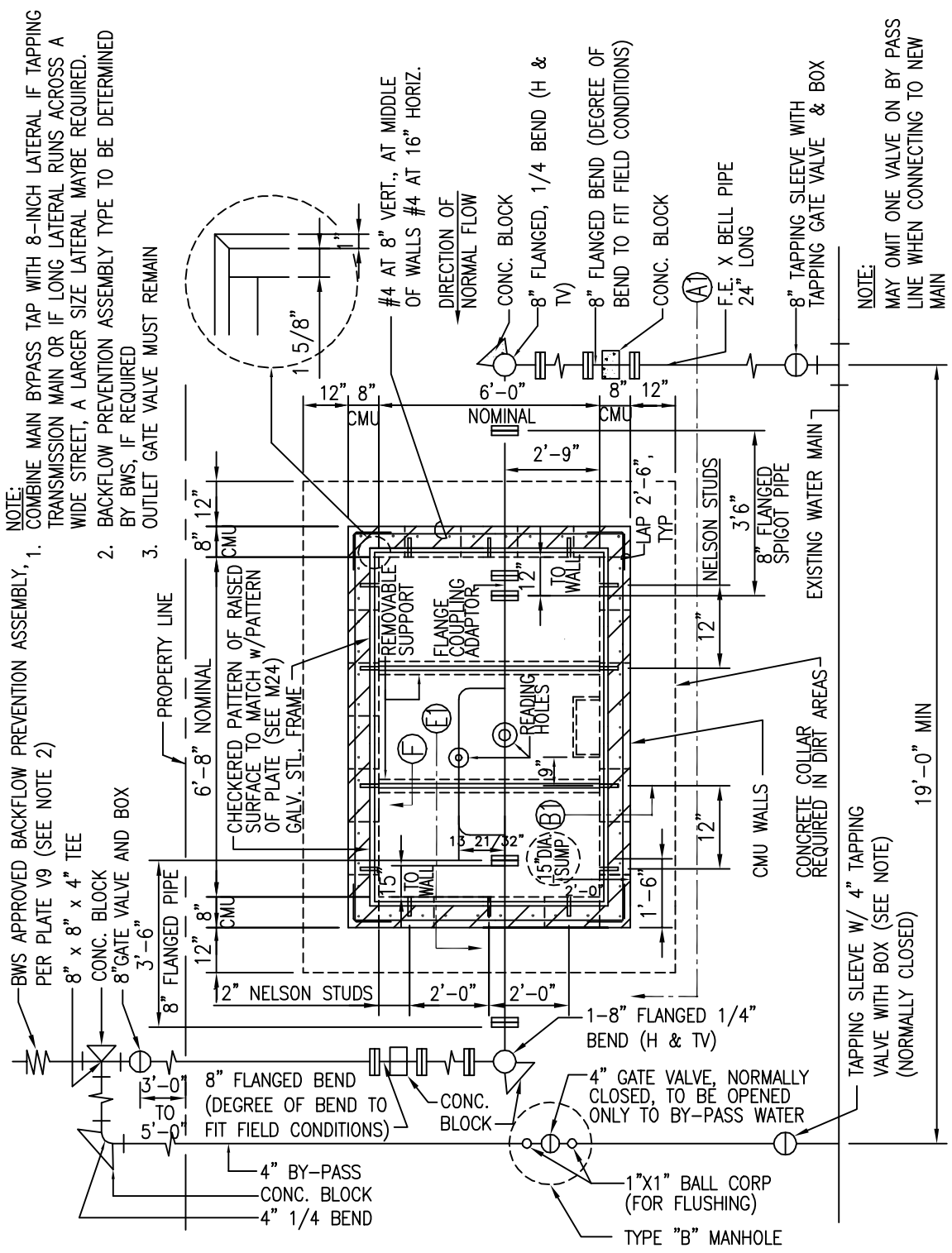

	2002
	REVISION

OAHU	8" X 2" FM METER & BOX LAYOUT FIRE AND DOMESTIC USES - CMU WALLS SCALE: NTS	STANDARD DETAILS	M34

OAHU

8" X 2" FM METER & BOX LAYOUT FIRE AND DOMESTIC USES - CMU WALLS

SCALE: NTS

STANDARD DETAILS

M35

2002 REVISION

NOTES FOR CMU WALL MANHOLE

1. BWS 3500 CONCRETE, 1500 PSI CMU AND GRADE 60 REINFORCING STEEL
2. DESIGN IS BASED ON: 250 PSF LIVE LOAD; 0 SURCHARGE; 60 PCF/FT AT REST PRESSURE; AND WATER TABLE BELOW BOTTOM SLAB; PER AASHTO LRFD BRIDGE DESIGN SPECIFICATION (1998) NON-TRAFFIC TYPE.
3. ALL CELLS SHALL BE GROUTED SOLID WITH 2500 PSI GROUT. TYPE M MORTAR
4. SPECIAL INSPECTION SHALL BE PROVIDED DURING CONSTRUCTION FOR CMU WALL.

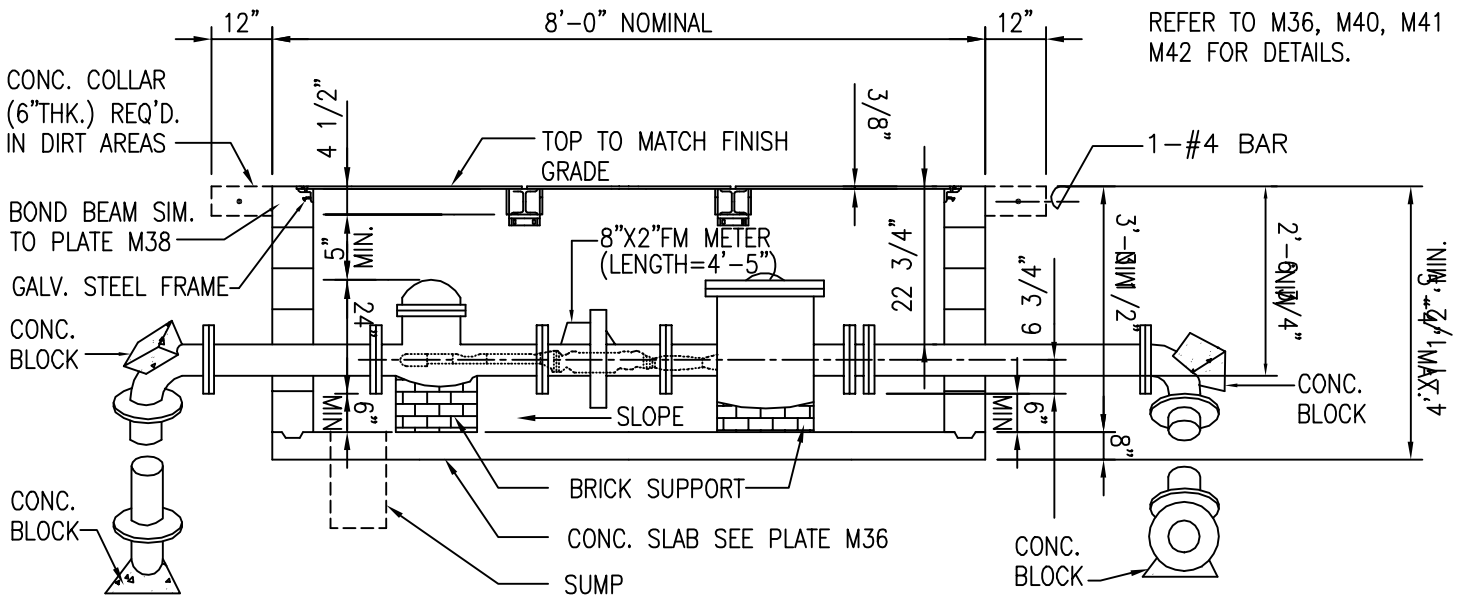

NOTE:

REFER TO M36, M40, M41 AND M42 FOR DETAILS.

SECTION "A1-A1"

NOTE:

COMBINED DOMESTIC AND FIRE FLOW REQUIREMENT = NOT TO EXCEED 3,500 GPM

CMU WALLS

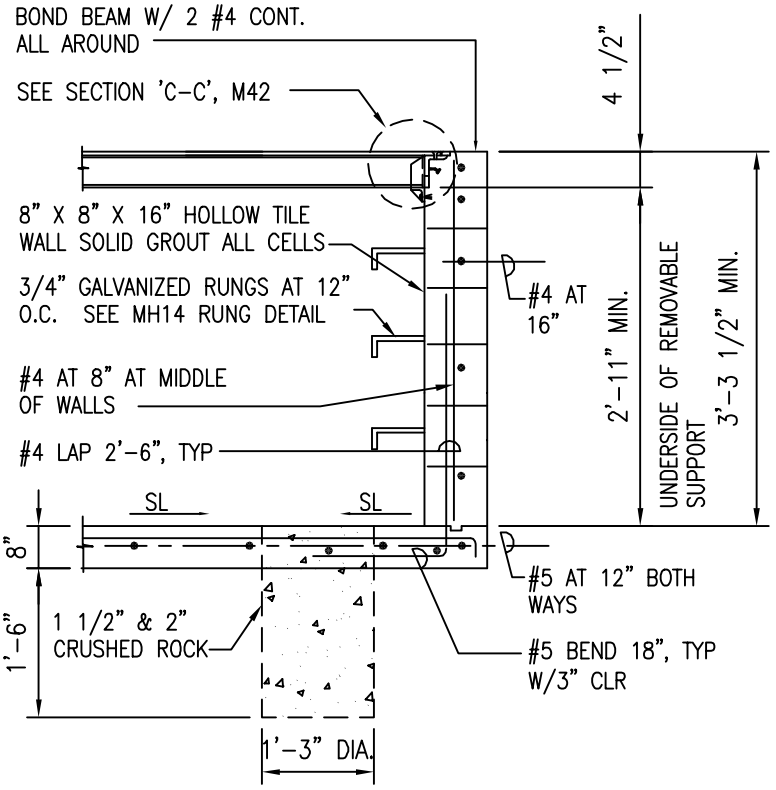

SECTION "B1-B1"

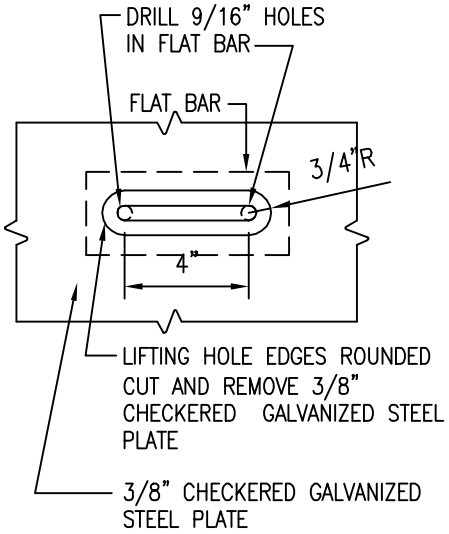

PLAN

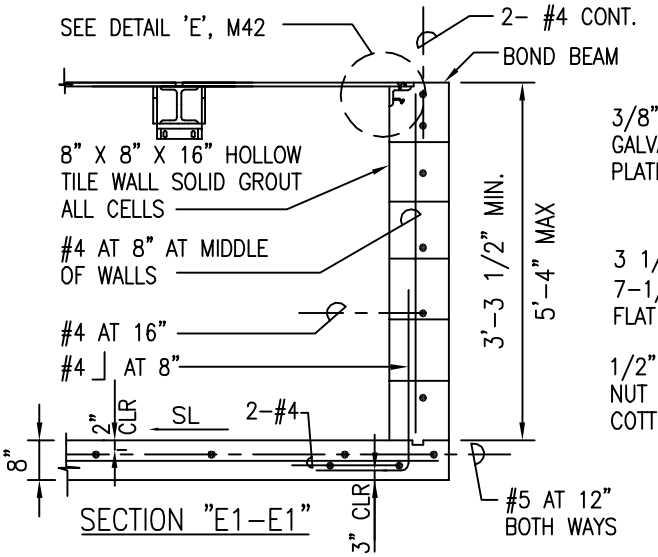

SECTION "E1-E1"

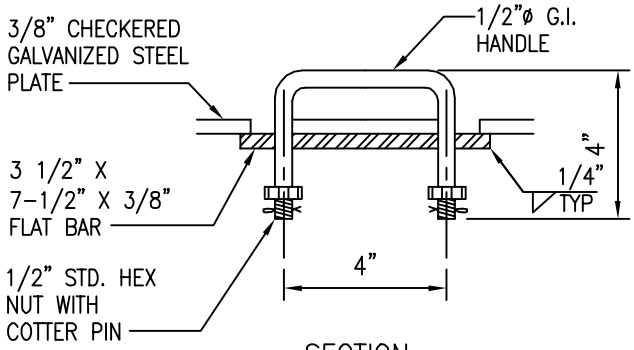

SECTION

HANDLE DETAIL

CMU WALLS

	2002
	REVISION

OAHU	**8" X 2" FM METER & BOX** **BOX DETAILS - CMU WALLS** **SCALE: NTS**	STANDARD DETAILS	M36

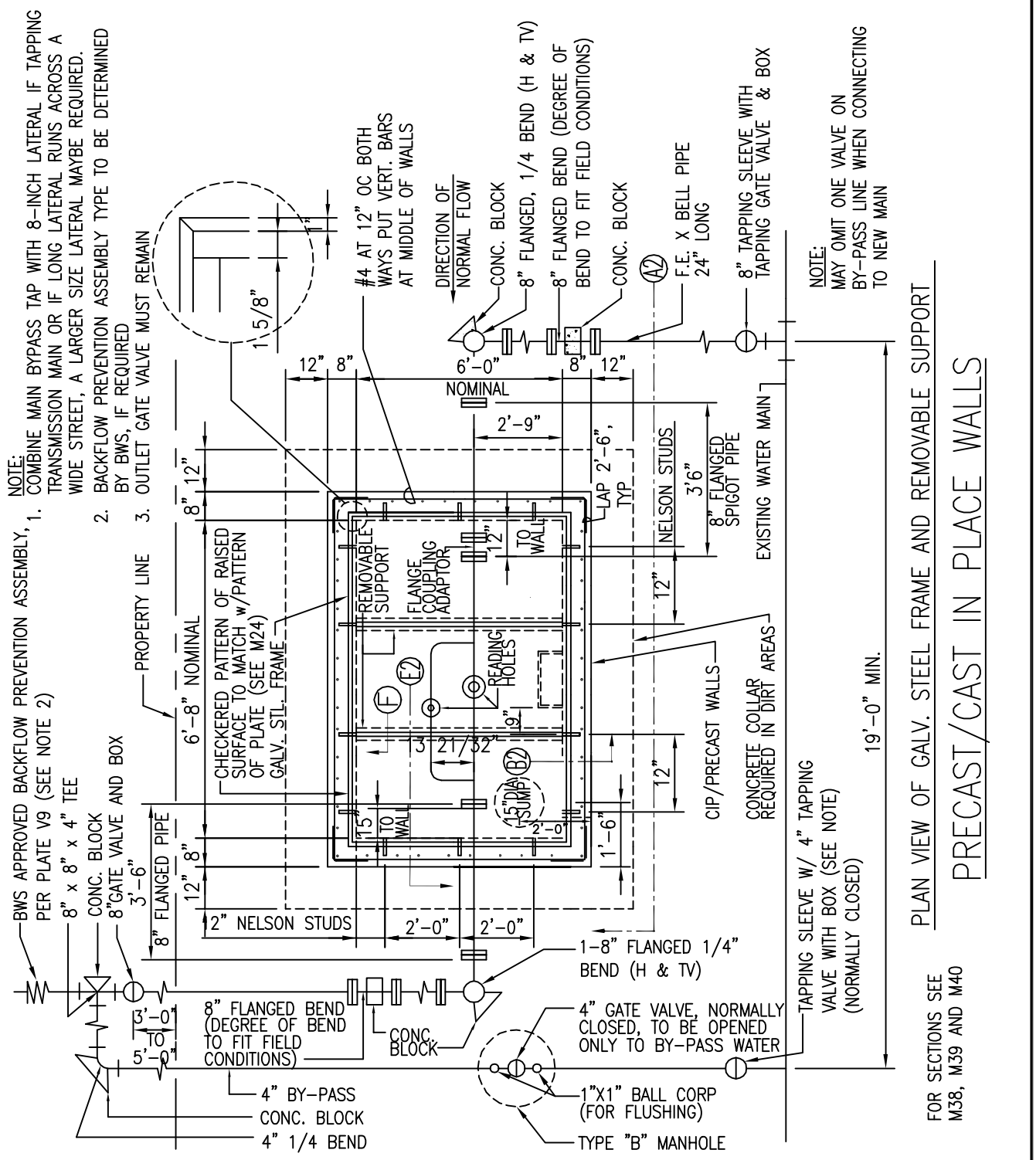

			2002
			REVISION
OAHU	8" X 2" FM METER & BOX LAYOUT FIRE AND DOMESTIC USES - PRECAST / CAST-IN-PLACE WALLS SCALE: NTS	STANDARD DETAILS	M37

NOTES FOR PRECAST/CAST-IN-PLACE WALL MANHOLE

1. BWS 3500 CONCRETE AND GRADE 60 REINFORCING STEEL
2. DESIGN IS BASED ON: 250 PSF LIVE LOAD; 0 SURCHARGE; 60 PCF/FT AT REST PRESSURE; AND WATER TABLE BELOW BOTTOM SLAB, PER AASHTO LRFD BRIDGE DESIGN SPECIFICATION (1998). NON-TRAFFIC TYPE.

NOTE:

REFER TO M39 TO M42 FOR DETAILS.

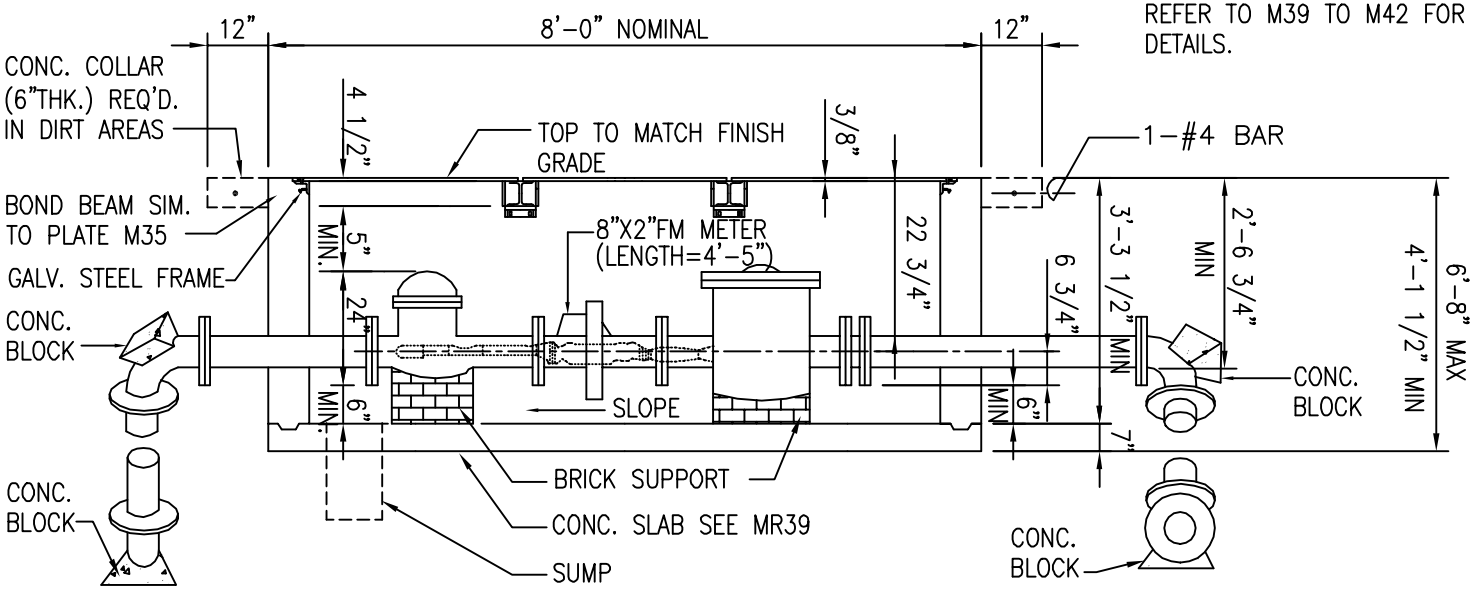

SECTION "A2-A2"

N.T.S.

NOTE:

COMBINED DOMESTIC AND FIRE FLOW REQUIREMENT = NOT TO EXCEED 3,500 GPM

PRECAST/CAST IN PLACE WALLS

OAHU

8" X 2" FM METER & BOX LAYOUT FIRE AND DOMESTIC USES - PRECAST / CAST-IN-PLACE WALLS

SCALE: NTS

STANDARD DETAILS

M38

2002 REVISION

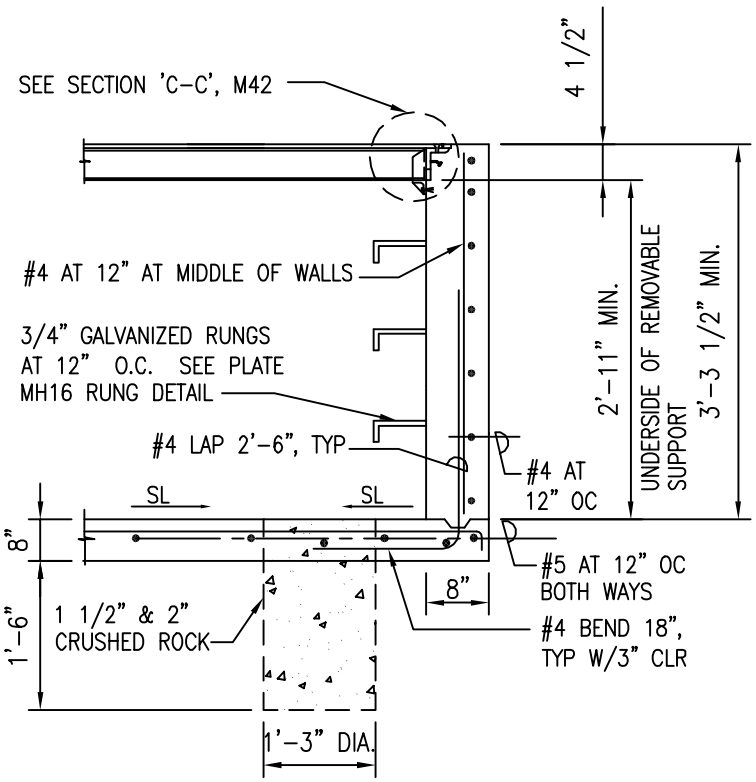

SECTION "B2-B2"
NOT TO SCALE

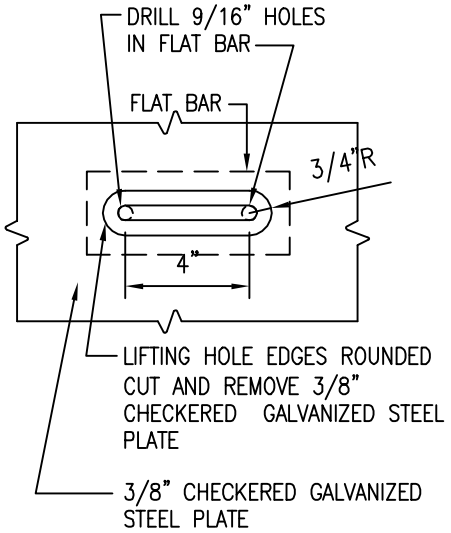

PLAN
NOT TO SCALE

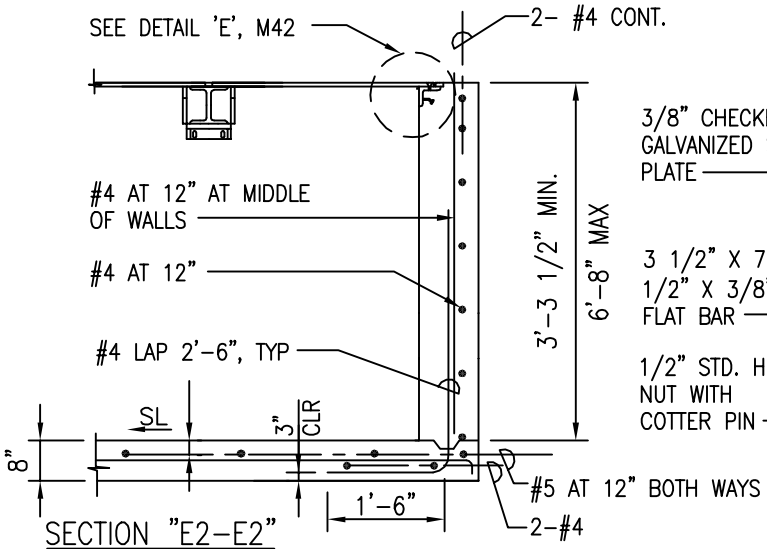

SECTION "E2-E2"
NOT TO SCALE

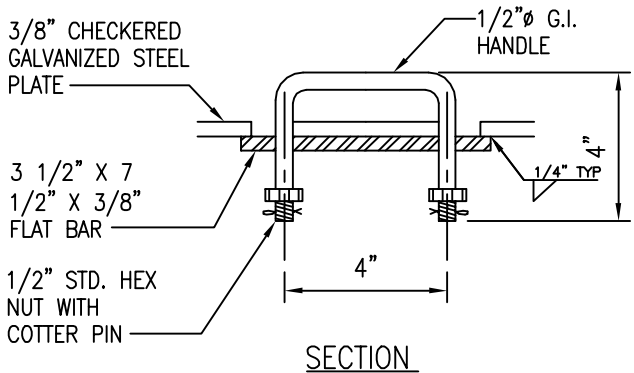

SECTION

HANDLE DETAIL
NOT TO SCALE

	2002
	REVISION

OAHU	**8" X 2" FM METER & BOX** **BOX DETAILS-PRECAST / CAST-IN-PLACE WALLS** **SCALE: NTS**	**STANDARD DETAILS**	**M39**

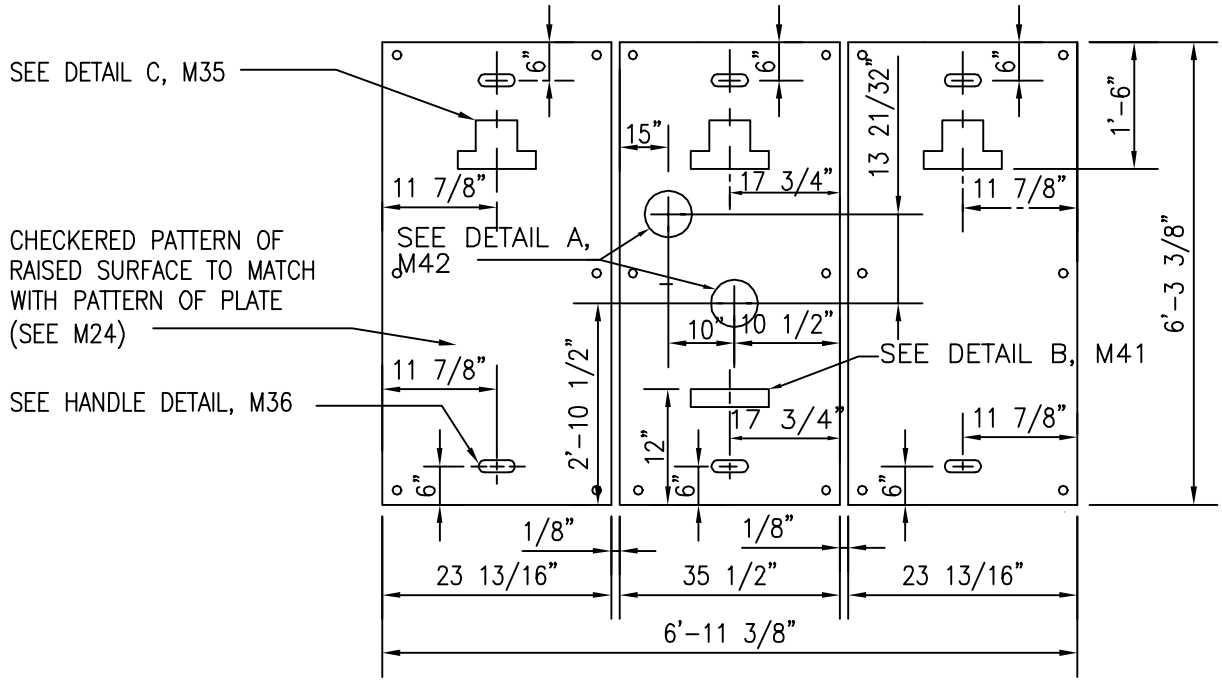

NOTES:

1. CONTRACTOR TO VERIFY ALL DIMENSIONS PRIOR TO FABRICATION.
2. LOCATION OF READING LID SHALL BE VERIFIED BY CONTRACTOR.

PLAN – FM METER COVER
NOT TO SCALE

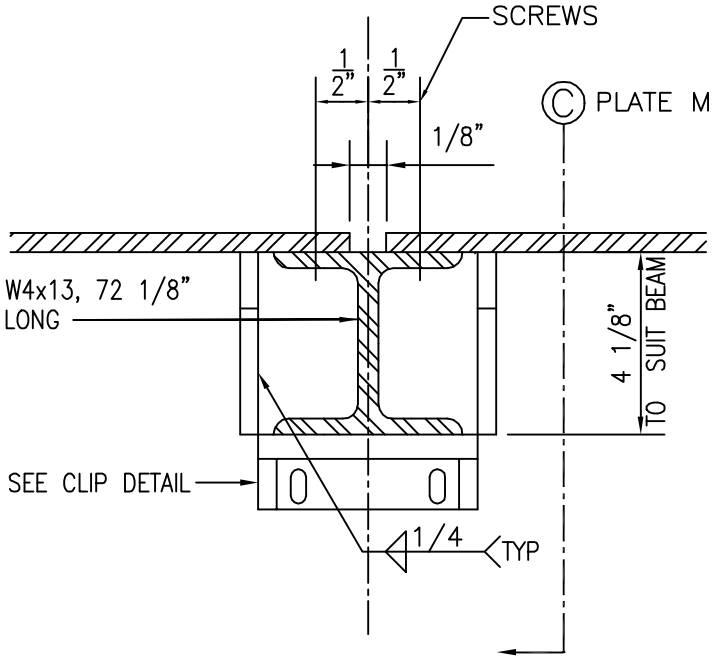

DETAIL "D"
REMOVABLE SUPPORT
NOT TO SCALE

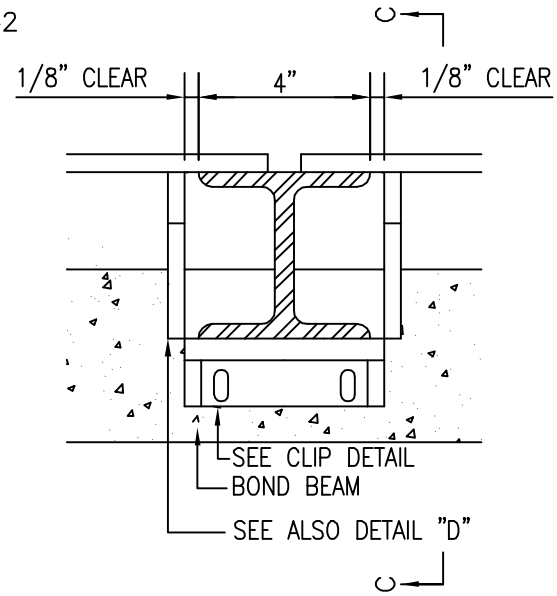

SECTION "F–F"
NOT TO SCALE

	2002
	REVISION

OAHU	8" X 2" FM METER & BOX COVER PLATE & SUPPORT DETAILS SCALE: NTS	STANDARD DETAILS	M40

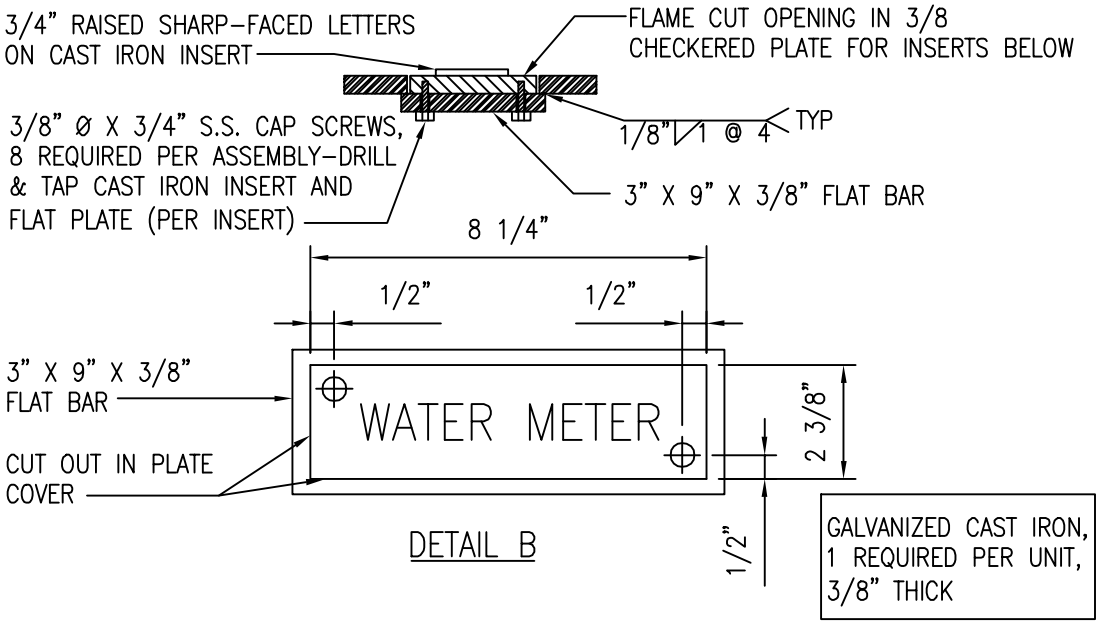

DETAIL B

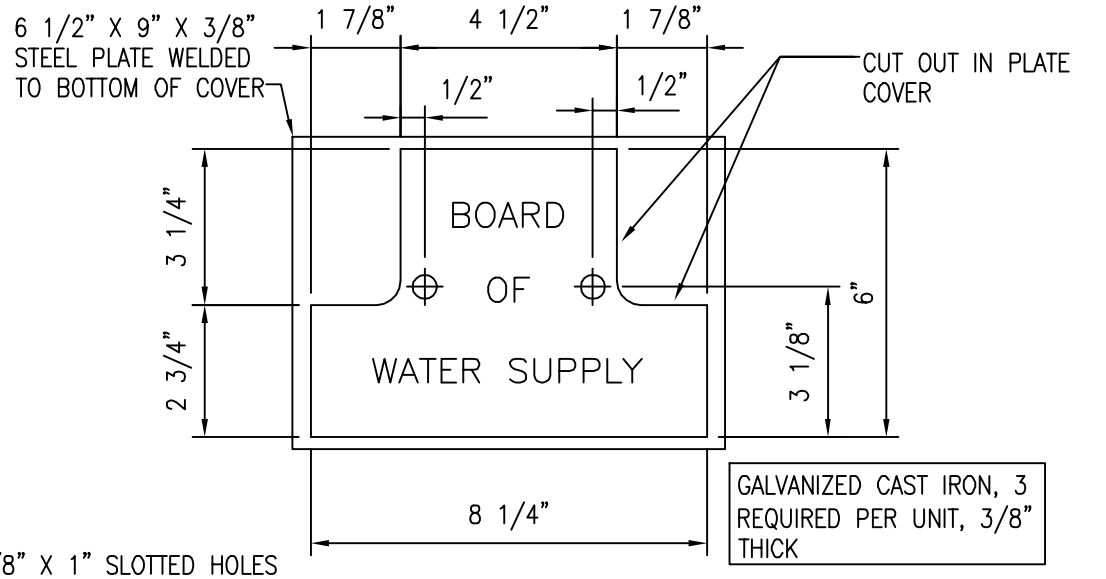

DETAIL C

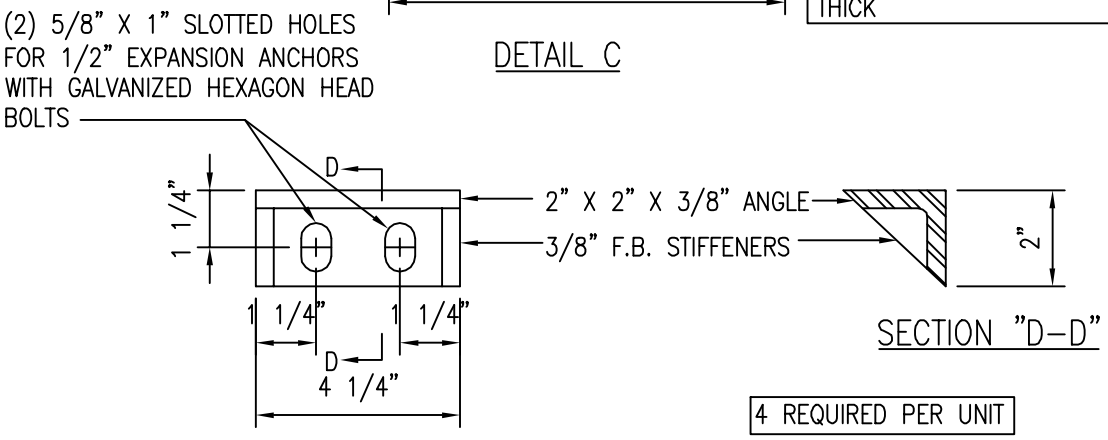

CLIP DETAIL

2002	
REVISION	

OAHU	**8" X 2" FM METER & BOX** **IDENTIFICATION INSERTS AND CLIP DETAILS** SCALE: NTS	STANDARD DETAILS	M41

SECTION OF DETAIL A

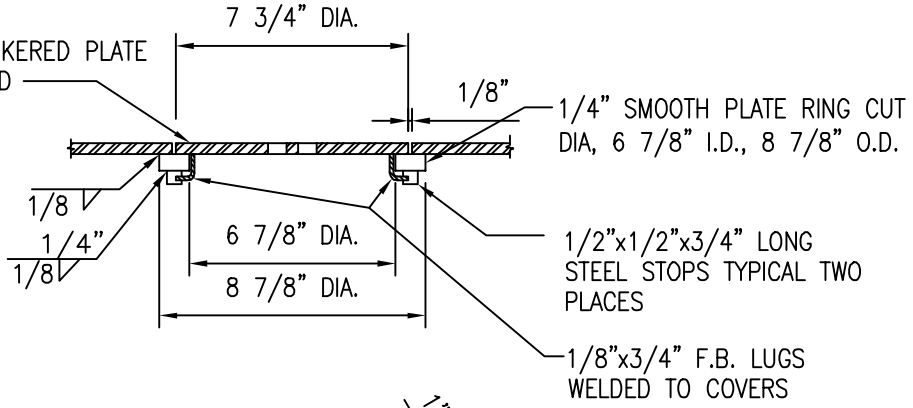

DETAIL A PLAN

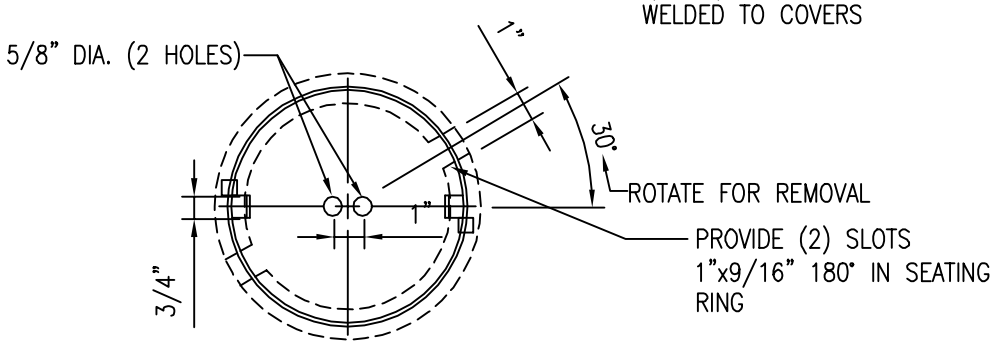

DETAIL E

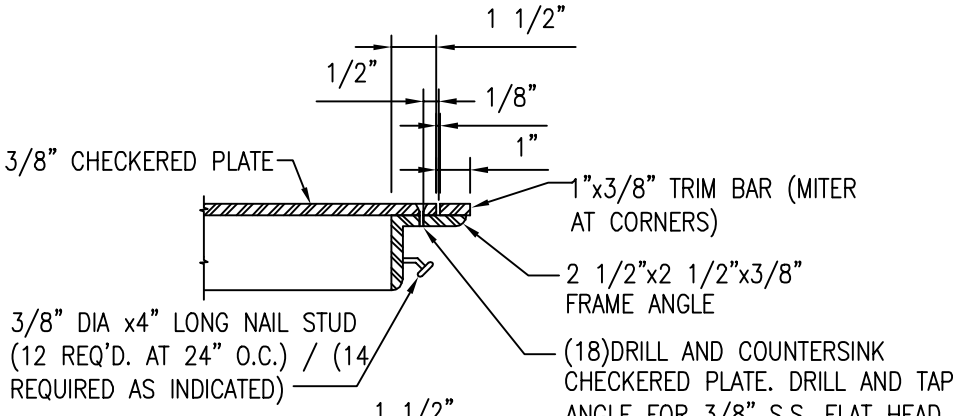

SECTION "C-C"

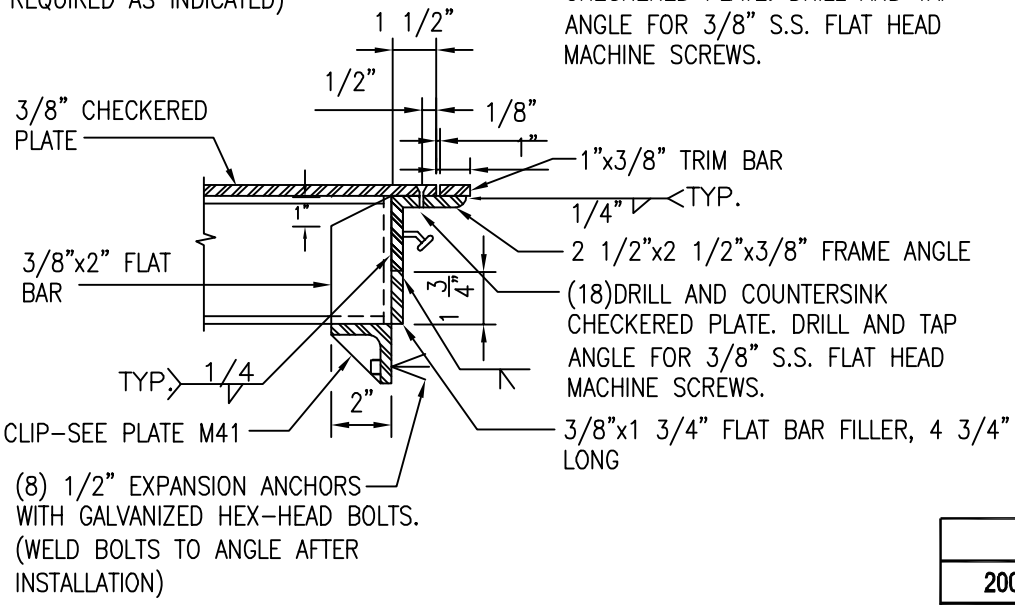

	2002
	REVISION

OAHU	**8" X 2" FM METER & BOX** **READING LID & FRAME DETAILS** SCALE: NTS	STANDARD DETAILS	M42

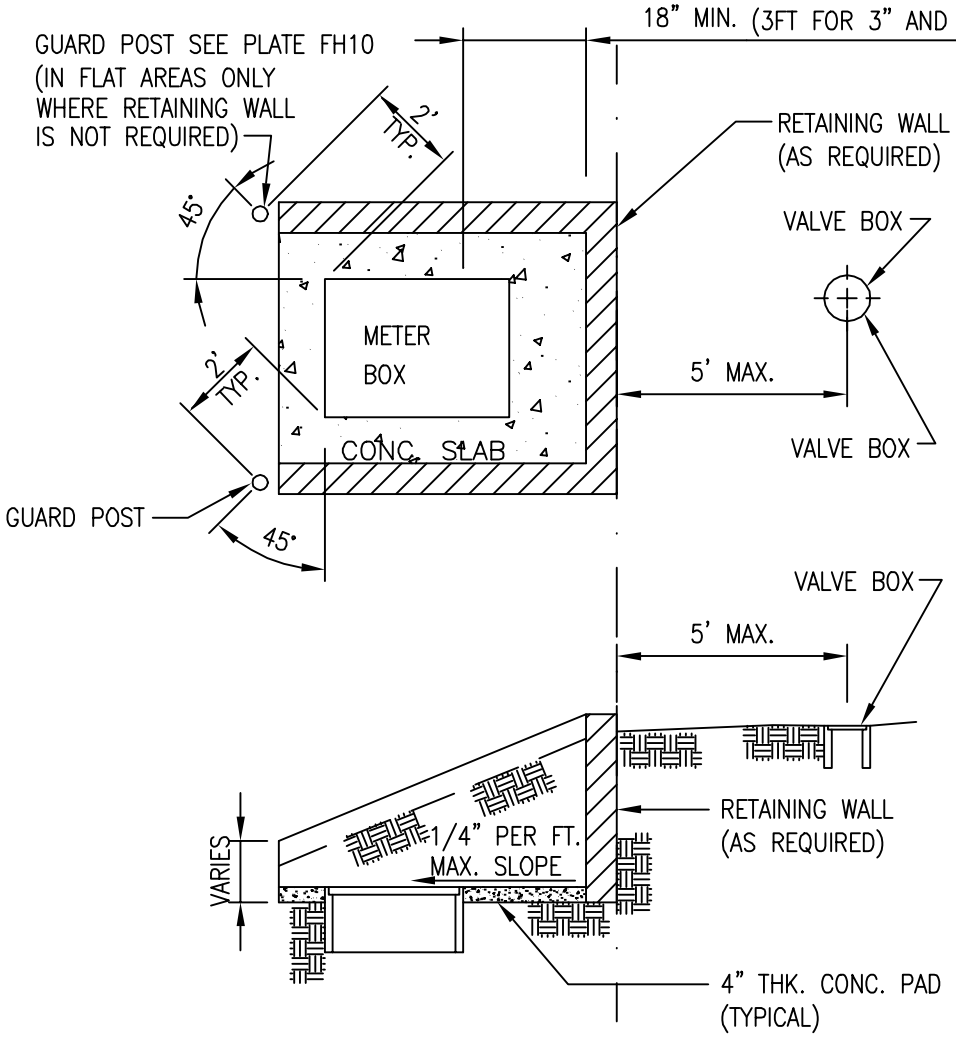

NOTES:

1. AVOID PLACEMENT OF METERS IN SWALE AREAS OR LOW POINTS.
2. METER/ CONC. SLAB DETAIL MAY BE ROTATED 90° TO FIT IN TIGHT AREAS. INSTALL FL x BELL PIECE WITH CONCRETE BEAM, AS REQUIRED.
3. RETAINING WALL REQUIRED IF EXISTING OR FINISH GROUND HAS SLOPE GREATER THAN 1/4" PER FOOT.
4. PROVIDE 4" THICK BY 12" WIDE (MIN.) WITH 1-#4 REBAR, CONCRETE SLAB AROUND METER BOX FOR 3" AND LARGER METERS.
5. PROVIDE GUARD POSTS WHEREVER POSSIBLE 2 FEET MINIMUM CLEAR FROM METER BOX.

WATER METER BOX DETAIL FOR NON-SIDEWALK AREAS

			2002
			REVISION
OAHU	WATER METER BOX FOR NON-SIDEWALK AREAS SCALE: NTS	STANDARD DETAILS	M43

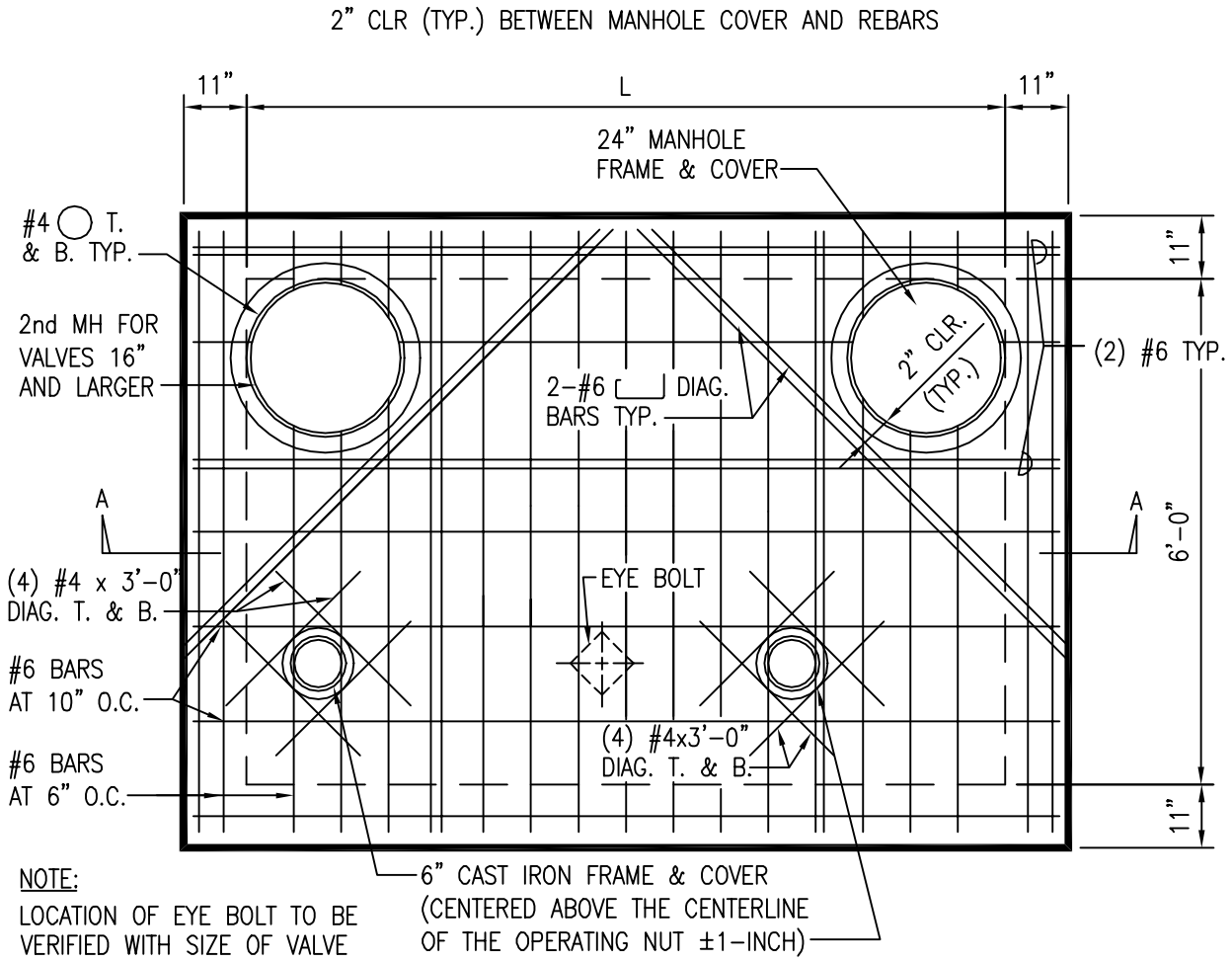

PLAN OF TOP SLAB
(BOTTOM REINFORCEMENT)

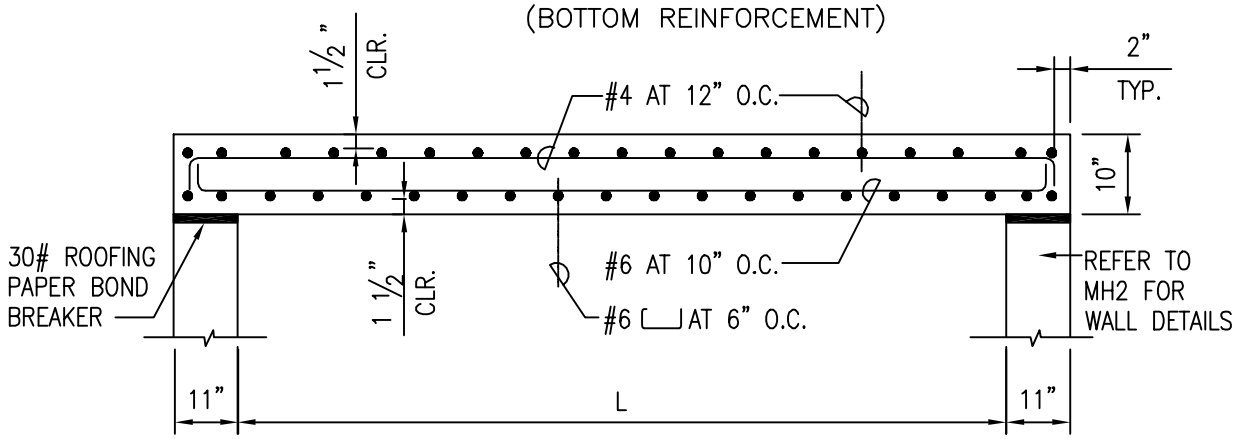

SECTION A-A

SEE PLATE MH3 FOR NOTES & TABLE

CAST-IN-PLACE TOP SLAB

			2002
			REVISION
KAUAI OAHU	TYPE "A" MANHOLE (TRAFFIC) FOR BEVEL GEARED GATE VALVES, CAST-IN-PLACE SCALE: NTS	STANDARD DETAILS	MH1

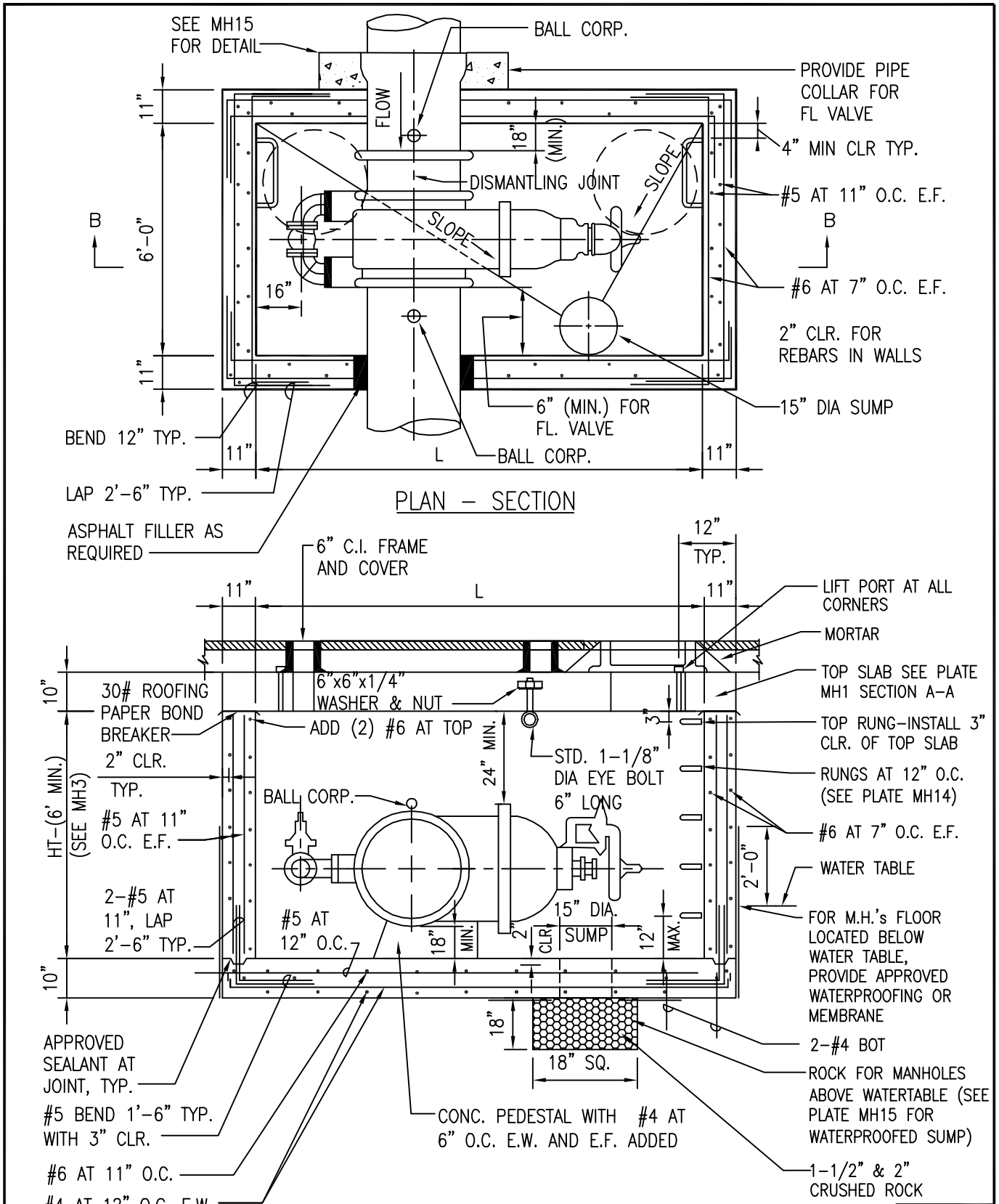

2002	
REVISION	

KAUAI OAHU	TYPE "A" MANHOLE (TRAFFIC) FOR BEVEL GEARED GATE VALVES, CAST-IN-PLACE SCALE: NTS	STANDARD DETAILS	MH2

NOTES FOR CAST-IN-PLACE AND PRECAST WALL MH FOR BGGV's:

1. DWS 3500 CONCRETE AND GRADE 60 REINFORCING STEEL.
2. REFER TO PLATES MH12, MH13, MH14, MH15, MH16, MH17 AND V3 FOR ADDITIONAL DETAILS.
3. REFER TO SECTION 302.16 AND TABLE 300-5 OF THE WATER SYSTEM STANDARD FOR THE REQUIRED BALL CORP. SIZES FOR VALVES.
4. DESIGN IS BASED ON: HS-20 LOADING; 5 FEET SURCHARGE; 60 PCF/FT AT REST PRESSURE; AND 4 FEET OF WATER ABOVE BOTTOM SLAB, PER AASHTO LRFD BRIDGE DESIGN SPECIFICATIONS (1998). ENGINEER TO MODIFY DESIGN IF WATER TABLE IS MORE THAN 4 FEET ABOVE BOTTOM SLAB.
5. STRUCTURAL BASE COURSE FOR MANHOLE BOTTOM SLAB NOT SHOWN AND SHALL BE PROVIDED AS REQUIRED BY DESIGN ENGINEER.
6. PAINT ALL METALS:
   A. MANHOLE FRAME AND COVER SHALL BE PAINTED WITH ASPHALTUM.
   B. SEE PAINTING SECTION IN STANDARDS FOR PAINT TYPE, SURFACE PREPARATION, ETC.
7. PROVIDE HOISTING SYSTEM FOR TRANSPORTATION AND INSTALLATION OF PRECAST WALL AND SLAB MEMBERS.
8. SPECIAL DESIGN FOR ROAD GRADES >5% IS REQUIRED
9. FOR OAHU, INSTALL FLXFL DISMANTLING JOINT ON ONE SIDE OF FLANGED END VALVES.
10. FOR FLANGED END VALVES, INSTALL FE x B ADAPTERS (LENGTH TO SUIT), DISMANTLING JOINT AND CAPPING COLLARS.
11. FOR OAHU ONLY, PLASTIC RUNGS MAY BE USED. SEE MH16.

C.I.P. AND PRECAST WALL MH			
VALVE SIZE (IN.)	L	HT. (MIN.)	HT. (MAX.)
12	6'-8"	6'-0"	12'-0"
16	8'-0"	6'-0"	12'-0"
18	8'-8"	6'-0"	12'-0"
20	8'-8"	6'-0"	12'-0"
24	10'-0"	6'-0"	12'-0"
30	11'-4"*	6'-6"	12'-0"
36	12'-8"*	7'-0"	12'-0"
42	14'-8"*	7'-6"	12'-0"

* SEE MH25 FOR OVERSIZED TOP SLAB DETAIL

			2002
			REVISION
KAUAI OAHU	TYPE "A" MANHOLE (TRAFFIC) FOR BEVEL GEARED GATE VALVES, CAST-IN-PLACE AND PRECAST WALL NOTES SCALE: NTS	STANDARD DETAILS	MH3

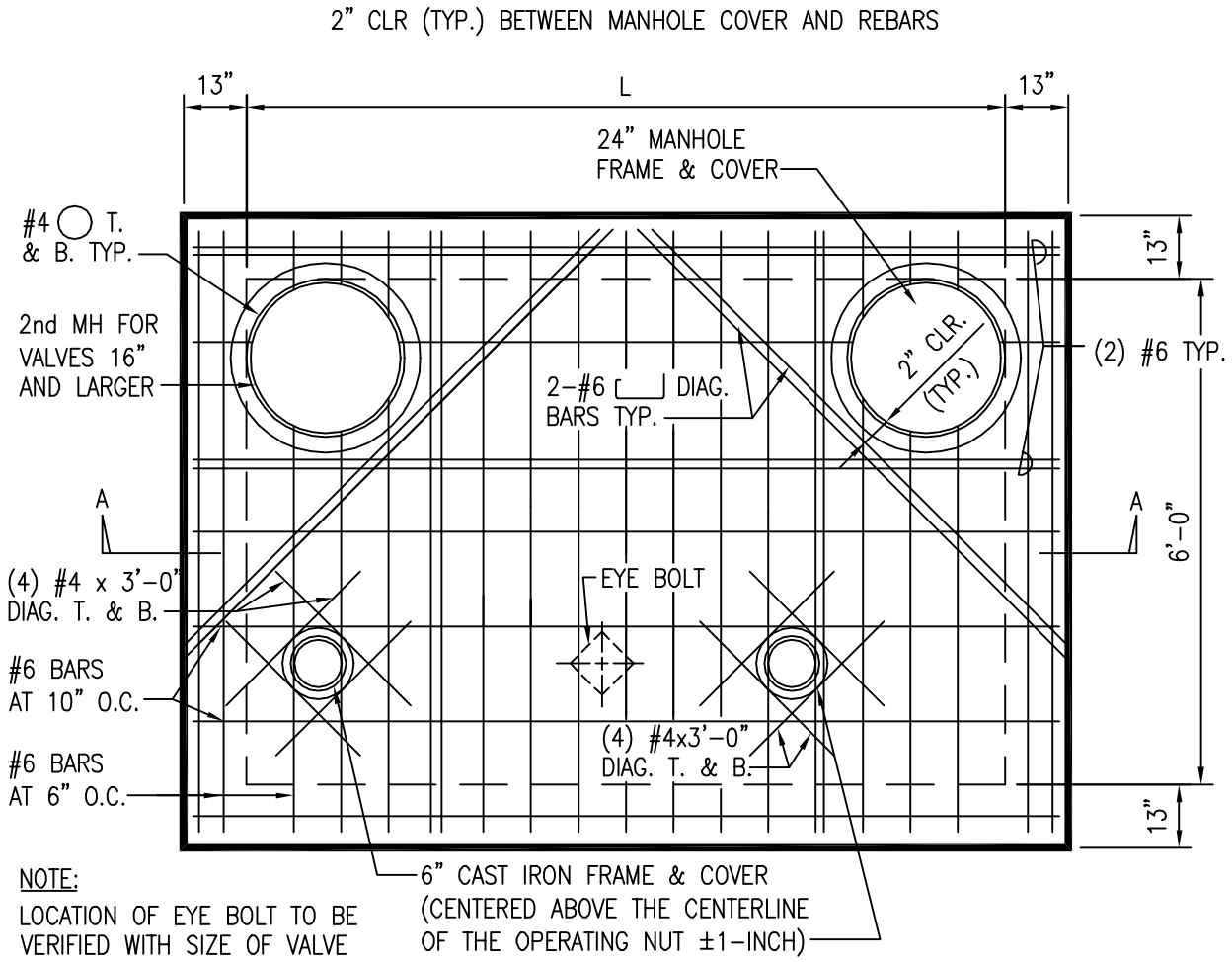

PLAN OF TOP SLAB
(BOTTOM REINFORCEMENT)

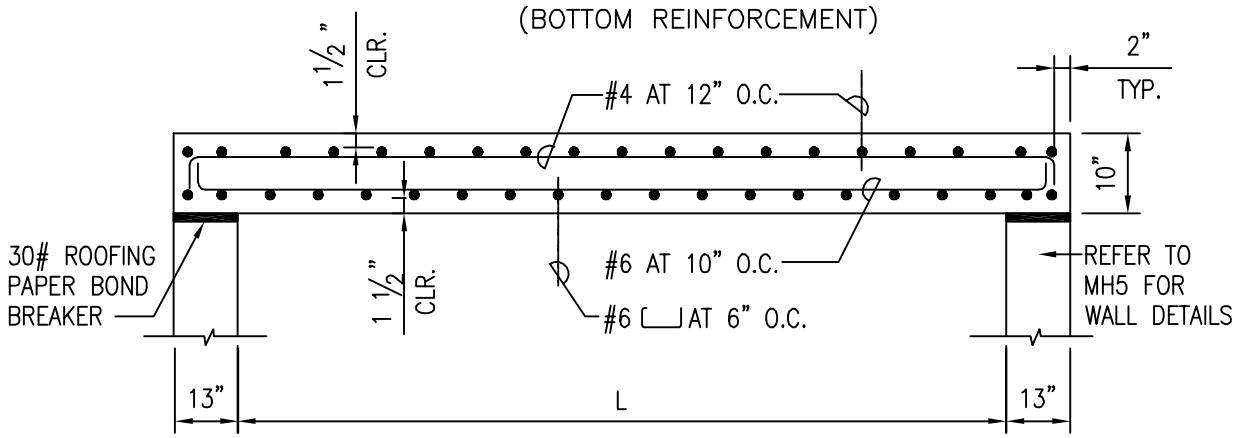

SECTION A-A

PRECAST TOP SLAB

SEE PLATE MH3 FOR NOTES & TABLE

	2002
	REVISION

KAUAI OAHU	**TYPE "A" MANHOLE (TRAFFIC) FOR BEVEL GEARED GATE VALVES, PRECAST** SCALE: NTS	STANDARD DETAILS	MH4

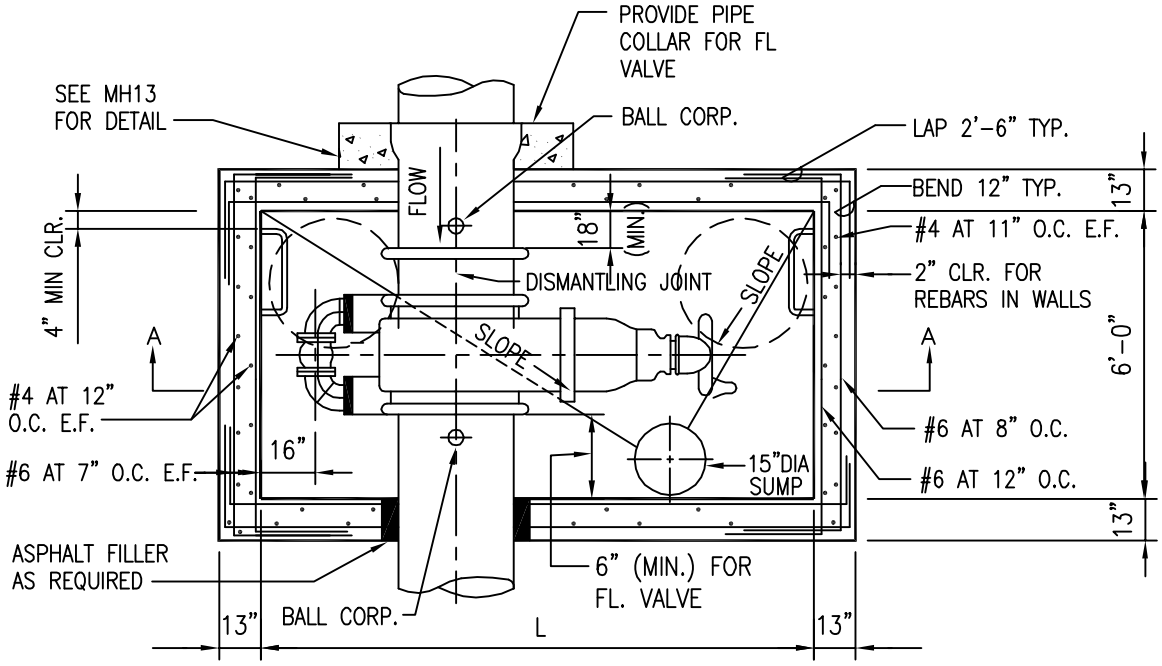

PLAN – SECTION

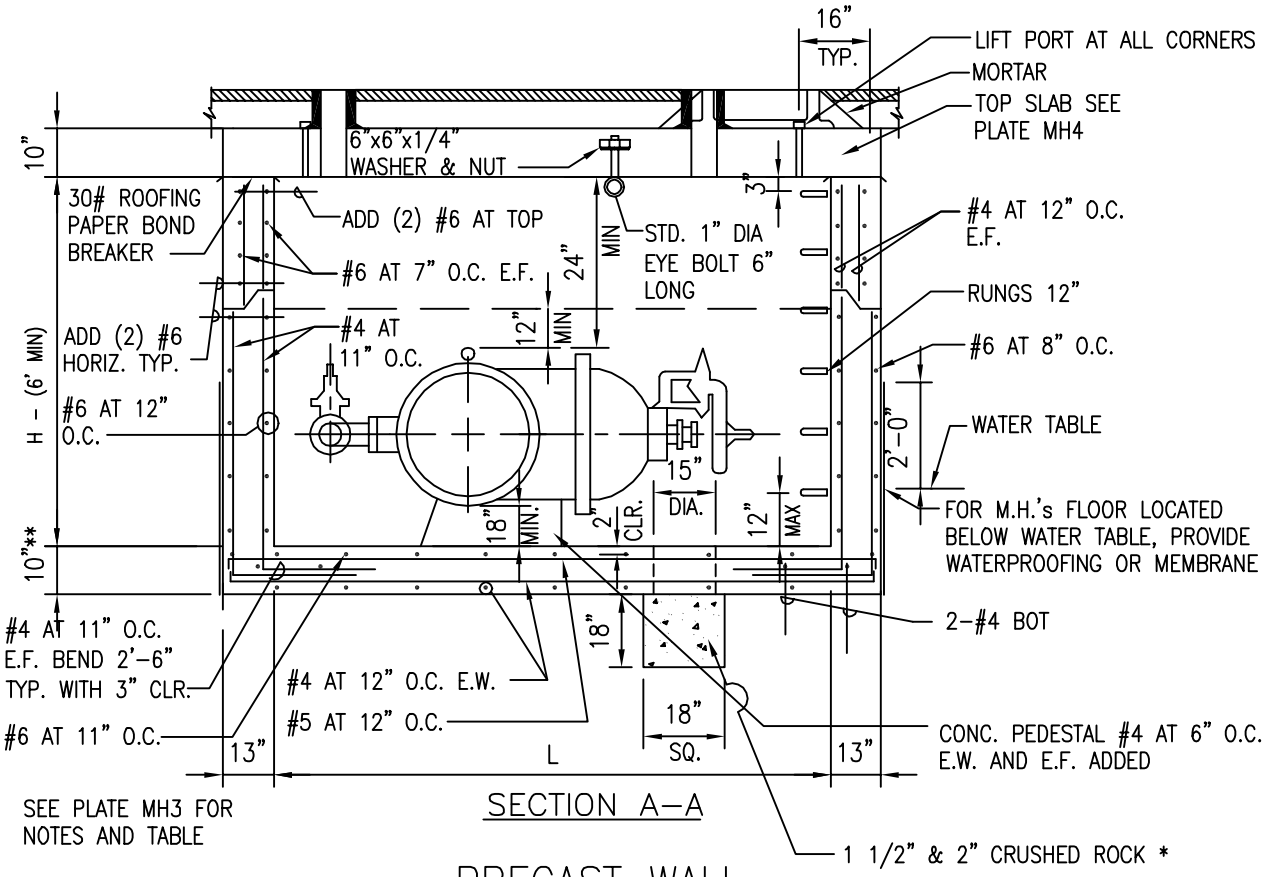

SECTION A–A

PRECAST WALL

* SEE PLATE MH12 FOR WATERPROOFED SUMP

** 14" FOR WATERPROOF CONDITION

	2002
	REVISION

KAUAI OAHU	**TYPE "A" MANHOLE (TRAFFIC)** **FOR BEVEL GEARED GATE VALVES, PRECAST** SCALE: NTS	STANDARD DETAILS	MH5

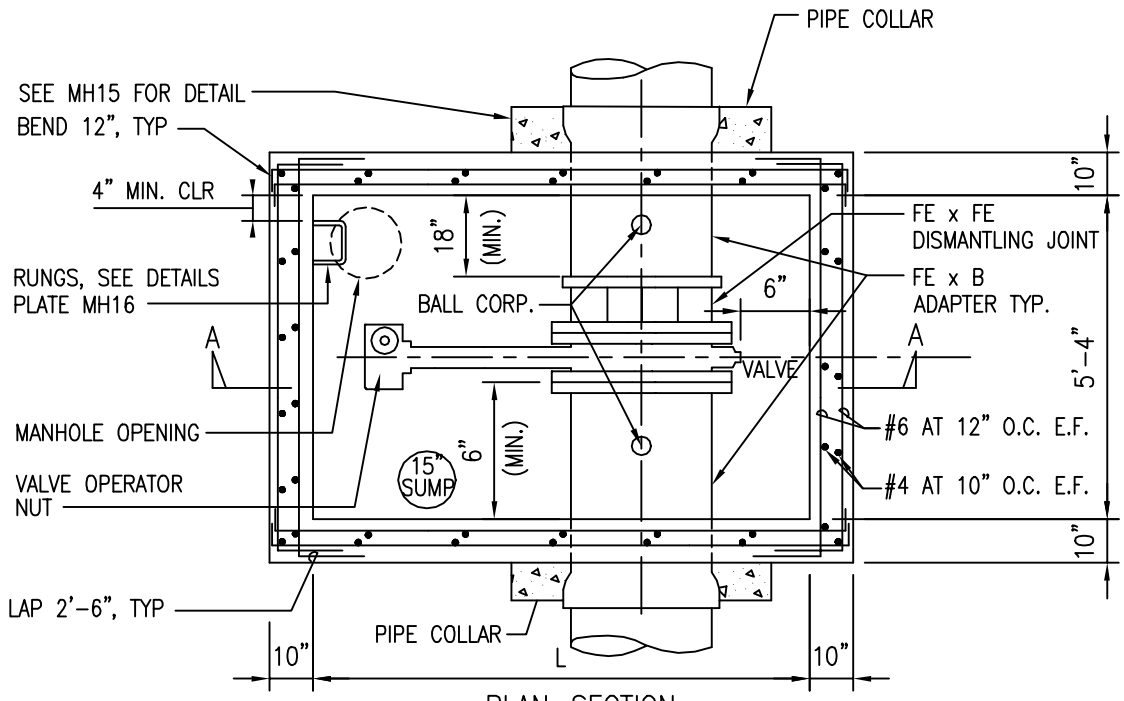

PLAN-SECTION

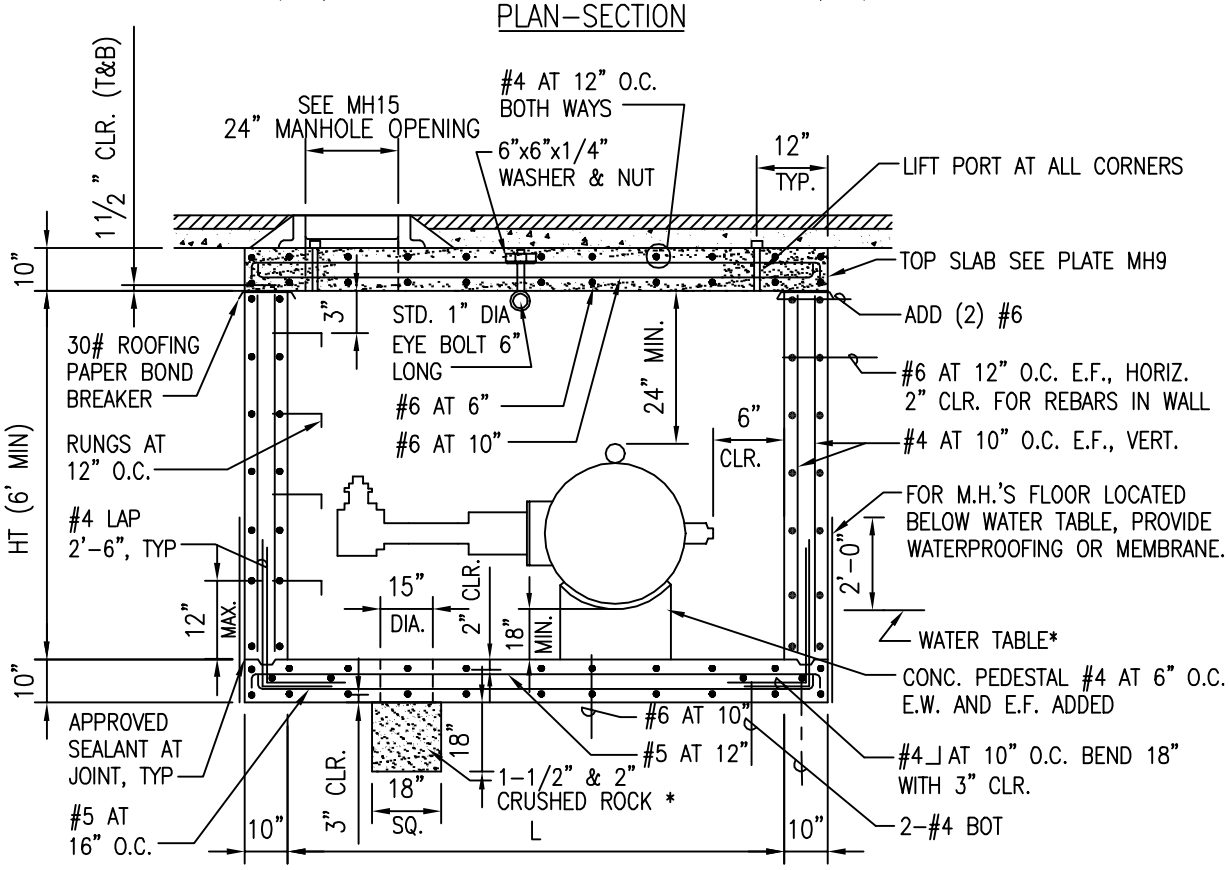

SECTION A-A

CAST-IN-PLACE WALL

* (SEE PLATE MH15 FOR WATERPROOFED SUMP)

SEE PLATE MH7 FOR NOTES AND TABLE

	2002
	REVISION

KAUAI OAHU MAUI	**TYPE "A" MANHOLE (TRAFFIC)** **FOR BUTTERFLY VALVES, CAST-IN-PLACE** **SCALE: NTS**	STANDARD DETAILS	MH6

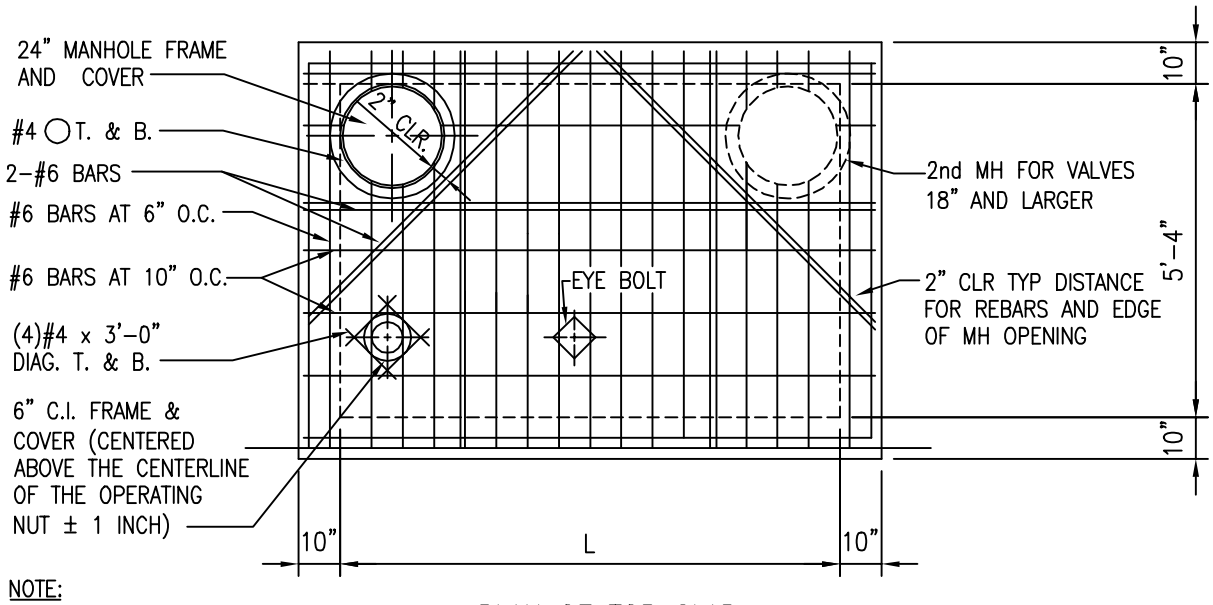

NOTE:
LOCATION OF EYE BOLT TO BE VERIFIED WITH SIZE OF VALVE

PLAN OF TOP SLAB
(BOTTOM REINFORCEMENT)

CAST-IN-PLACE TOP SLAB

NOTES: FOR CAST-IN-PLACE WALL MH

1 DWS 3500 CONCRETE AND GRADE 60 REINFORCING STEEL.

2 REFER TO SECTION 302.16 AND TABLE 300-5 OF THE WATER SYSTEM STANDARD FOR THE REQUIRED BALL CORP. SIZES FOR VALVES.

3 REFER TO PLATES MH13, MH14, MH15, MH17, AND V3 FOR ADDITIONAL DETAILS.

4 FOR OAHU AND KAUAI, PLASTIC RUNGS MAY BE USED. REFER TO PLATE MH16.

5 FOR MAUI ONLY, IN NON-TRAFFIC LOADING AREAS. SEE PLATE M23 FOR COVER DETAILS AND MANHOLE MODIFICATIONS.

6 DESIGN IS BASED ON: HS-20 LOADING; 5 FEET SURCHARGE; AND 4 FEET OF WATER ABOVE BOTTOM SLAB, PER AASHTO LRFD BRIDGE DESIGN SPECIFICATIONS (1998).

7 STRUCTURAL BASE COURSE FOR MANHOLE BOTTOM SLAB NOT SHOWN AND SHALL BE PROVIDED AS REQUIRED BY DESIGN ENGINEER.

8 PAINT ALL METALS:
A. SEE PAINTING SECTION IN STANDARDS FOR PAINT TYPE, SURFACE PREPARATION, ETC.
B. MANHOLE FRAME AND COVER, SHALL BE PAINTED WITH ASPHALTUM.

9 SPECIAL DESIGN FOR ROAD GRADES > 5% IS REQUIRED

10 FOR FLANGED END VALVES, INSTALL FE x B ADAPTERS (LENGTH TO SUIT), FE X FE DISMANTLING JOINT ON ONE SIDE OF VALVE, AND CAPPING COLLARS.

SIZE VALVE	L	HT (MIN)	HT (MAX)
12" & 16"	5'-4"	6'-0"	12'-4"
18" & 20"	6'-0"	6'-0"	12'-0"
24"	6'-8"	6'-0"	12'-0"
30"	7'-4"	6'-0"	12'-0"
36"	8'-0"	6'-0"	12'-0"
42"	8'-8"	6'-0"	12'-0"

2002
REVISION

KAUAI
OAHU
MAUI

TYPE "A" MANHOLE (TRAFFIC)
FOR BUTTERFLY VALVES, CAST-IN-PLACE
SCALE: NTS

STANDARD DETAILS

MH7

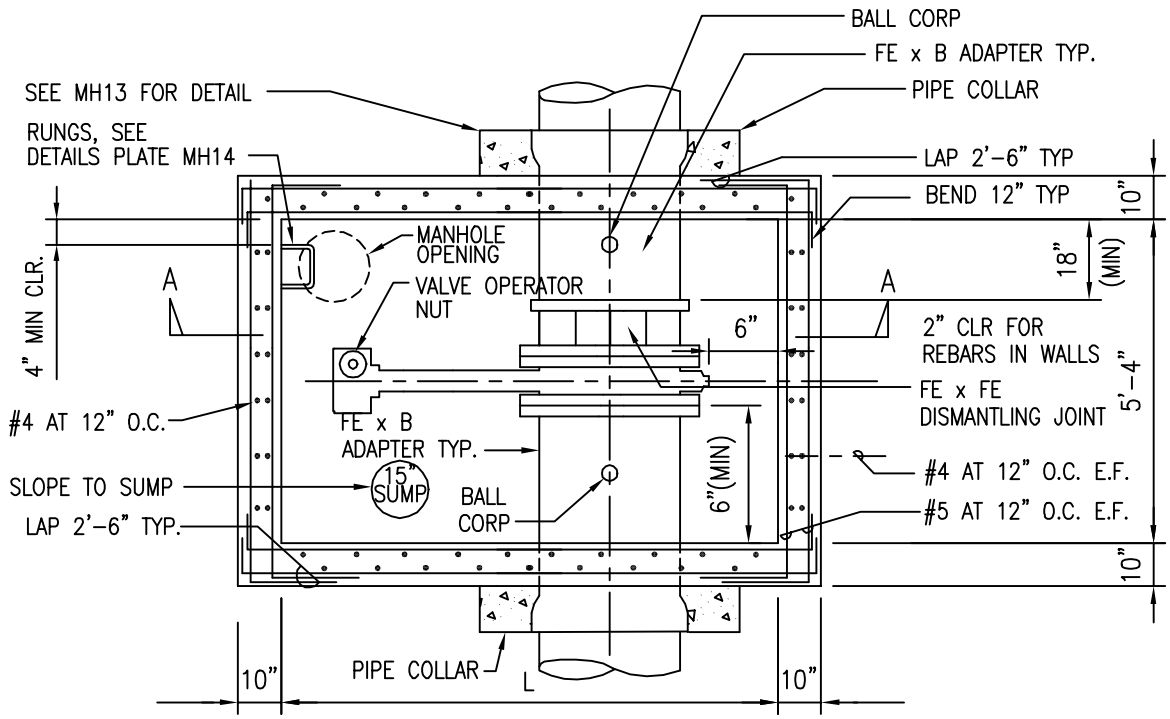

PLAN-SECTION

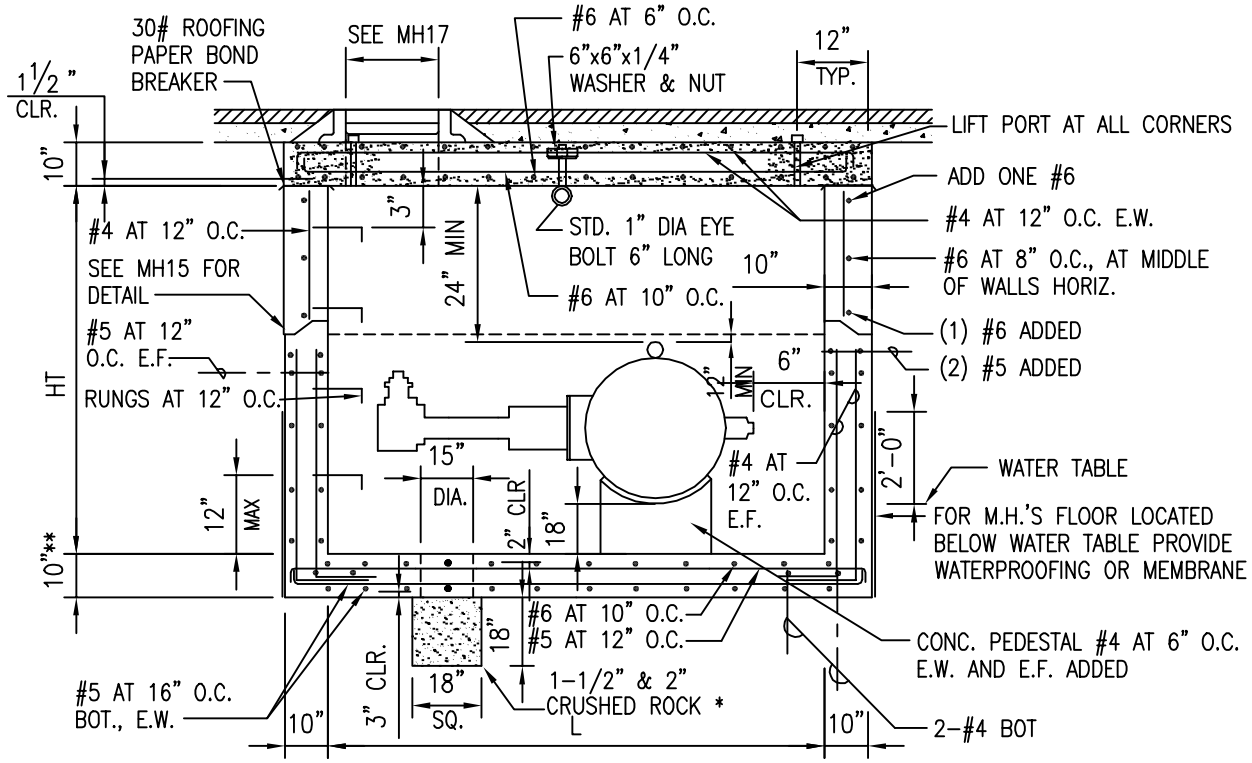

SEE PLATE MH9 FOR NOTES AND TABLE

SECTION A-A

PRECAST WALL

* SEE PLATE MH12 FOR WATERPROOFED SUMP

** 14" FOR WATERPROOF CONDITION

	2002
	REVISION

KAUAI OAHU MAUI	**TYPE "A" MANHOLE (TRAFFIC)** **FOR BUTTERFLY VALVES, PRECAST** SCALE: NTS	STANDARD DETAILS	MH8

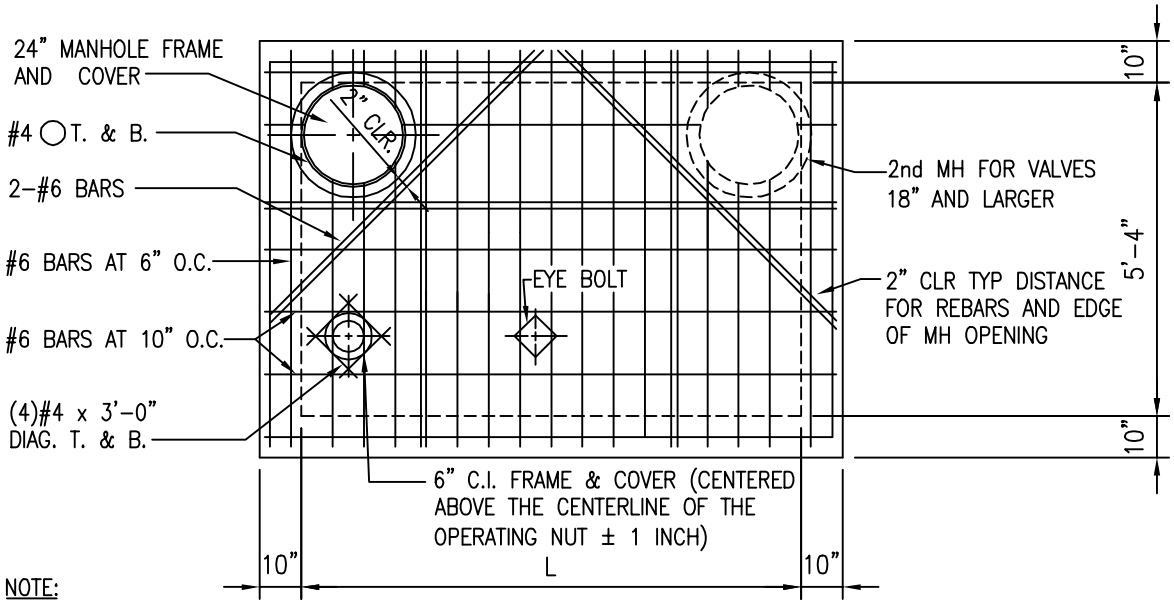

NOTE:
LOCATION OF EYE BOLT TO BE VERIFIED WITH SIZE OF VALVE

PLAN OF TOP SLAB
(BOTTOM REINFORCEMENT)

PRECAST TOP SLAB

NOTES: FOR PRECAST CONCRETE WALL MH

1 DWS 3500 CONCRETE AND GRADE 60 REINFORCING STEEL.

2 REFER TO SECTION 302.16 AND TABLE 300-5 OF THE WATER SYSTEM STANDARD FOR THE REQUIRED BALL CORP. SIZES FOR VALVES.

3 REFER TO PLATES MH12, MH13, MH14, MH15, MH17 AND V3 FOR ADDITIONAL DETAILS.

4 FOR OAHU AND KAUAI, PLASTIC RUNGS MAY BE USED. REFER TO PLATE MH16.

5 FOR MAUI ONLY, IN NON-TRAFFIC LOADING AREAS, SEE PLATE M23 FOR COVER DETAILS AND MANHOLE MODIFICATIONS.

6 DESIGN IS BASED ON: HS-20 LOADING; 5 FEET SURCHARGE; 60 PCF/FT AT REST PRESSURE; AND 4 FEET OF WATER ABOVE BOTTOM SLAB, PER AASHTO LRFD BRIDGE DESIGN SPECIFICATIONS (1998).

7 STRUCTURAL BASE COURSE FOR MANHOLE NOT SHOWN AND SHALL BE PROVIDED AS REQUIRED BY DESIGN ENGINEER.

8 PAINT ALL METALS:
A. SEE PAINTING SECTION IN STANDARDS FOR PAINT TYPE, SURFACE PREPARATION, ETC.
B. MANHOLE FRAME AND COVER, SHALL BE PAINTED WITH ASPHALTUM.

9 PROVIDE HOISTING SYSTEM FOR TRANSPORTATION AND INSTALLATION OF PRECAST WALL MEMBERS.

10 SPECIAL DESIGN FOR ROAD GRADES > 5% IS REQUIRED

11 FOR FLANGED END VALVES, INSTALL FE x B ADAPTERS (LENGTH TO SUIT), FE X FE DISMANTLING JOINT ON ONE SIDE OF VALVE, AND CAPPING COLLARS.

SIZE VALVE	L	HT (MIN)	HT (MAX)
12" & 16"	5'-4"	6'-0"	12'-0"
18" & 20"	6'-0"	6'-0"	12'-0"
24"	6'-8"	6'-0"	12'-0"
30"	7'-4"	6'-0"	12'-0"
36"	8'-0"	6'-0"	12'-0"
42"	8'-8"	6'-0"	12'-0"

2002
REVISION

KAUAI
OAHU
MAUI

TYPE "A" MANHOLE (TRAFFIC)
FOR BUTTERFLY VALVES, PRECAST
SCALE: NTS

STANDARD DETAILS

MH9

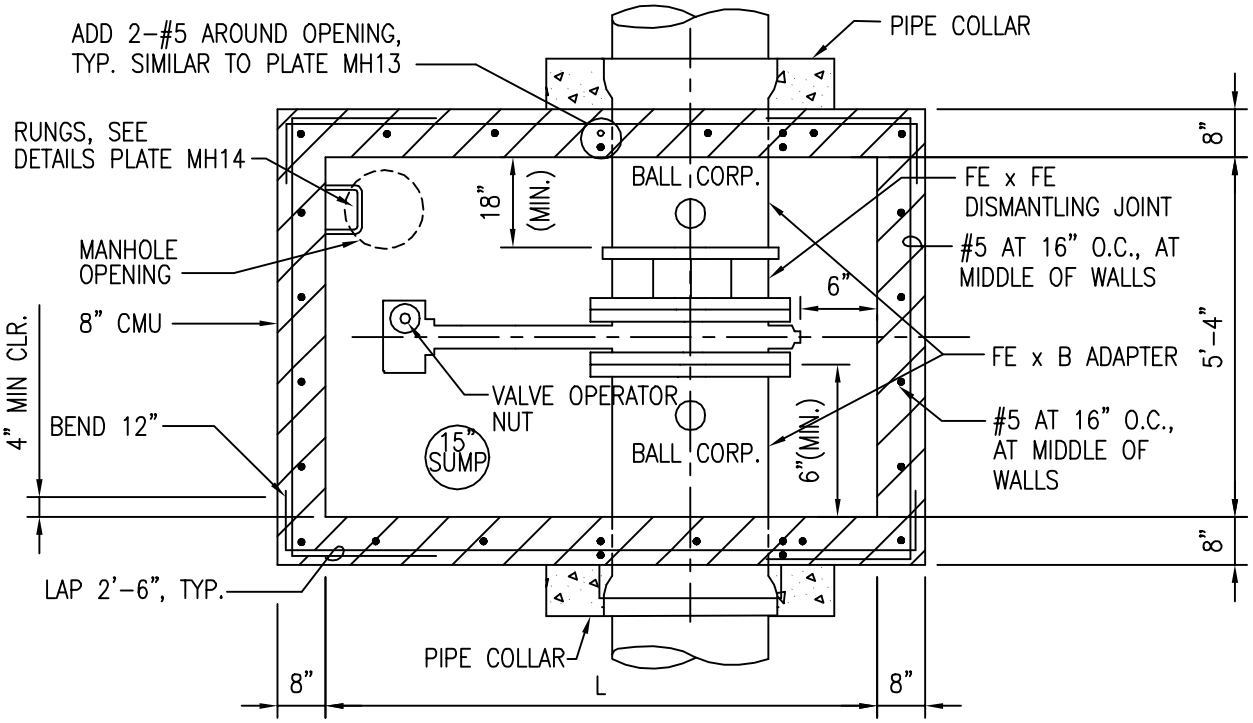

PLAN-SECTION

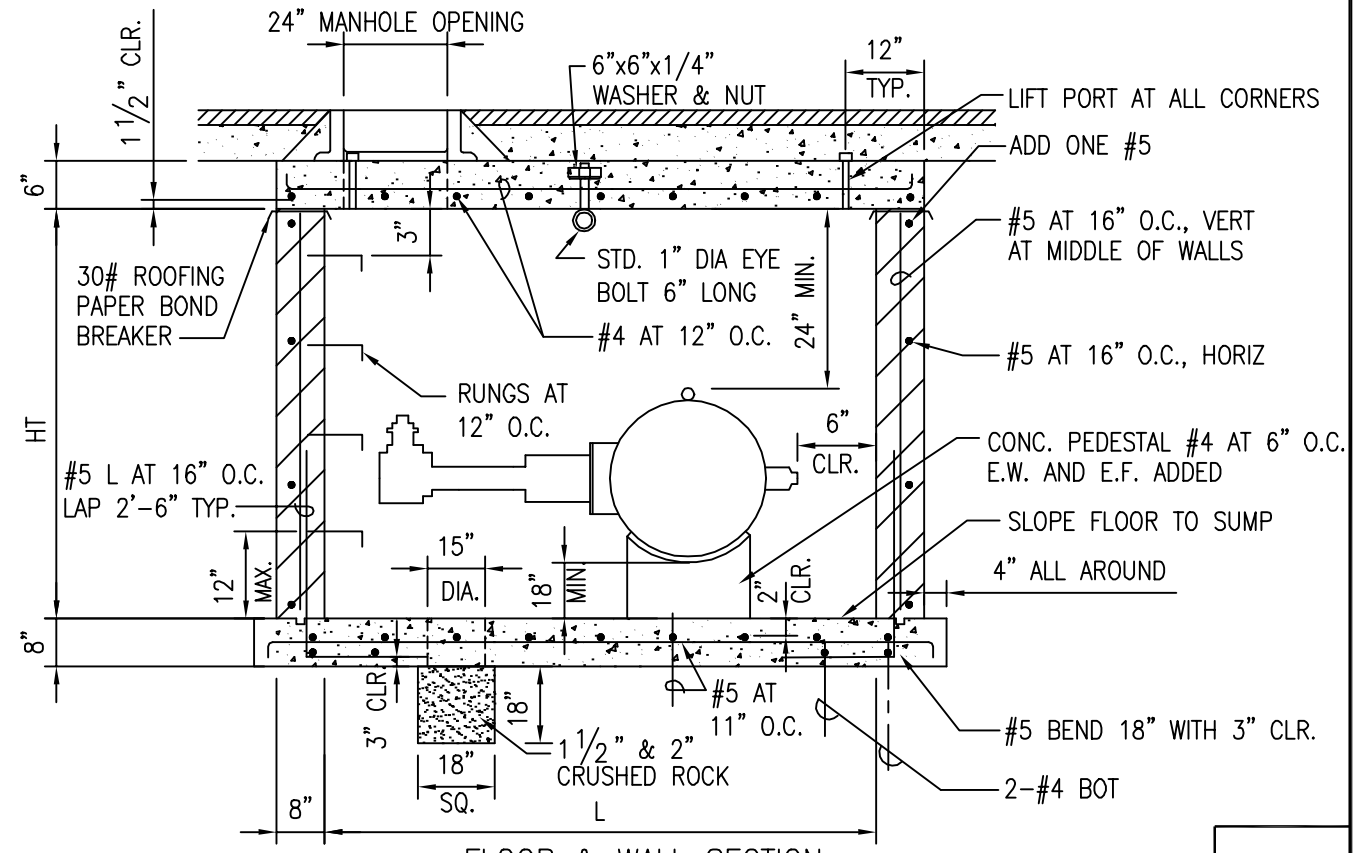

FLOOR & WALL SECTION

CMU WALL

SEE PLATE MH11 FOR NOTES AND TABLE

2002	
REVISION	

MAUI	**TYPE "A-1" MANHOLE (NON-TRAFFIC)** **FOR BUTTERFLY VALVES, CMU** **SCALE: NTS**	STANDARD DETAILS	MH10

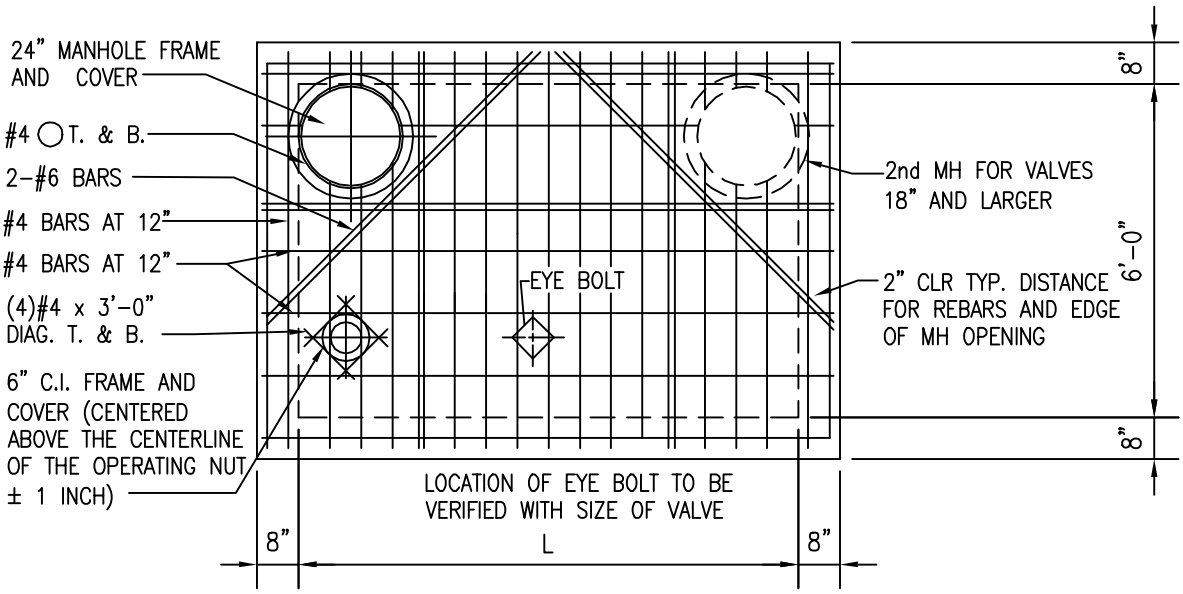

PLAN OF TOP SLAB
(BOTTOM REINFORCEMENT)

PRECAST TOP SLAB FOR
CMU WALL
(NON-TRAFFIC)

NOTES: FOR CMU WALL MH

1 DWS 3500 CONCRETE AND GRADE 60 REINFORCING STEEL.

2 REFER TO SECTION 302.16 AND TABLE 300-5 OF THE WATER SYSTEM STANDARD FOR THE REQUIRED BALL CORP. SIZES FOR VALVES.

3 REFER TO PLATES MH12, MH13, MH14, MH15, MH17 AND V3 FOR ADDITIONAL DETAILS.

4 IN NON-TRAFFIC AREAS, METAL MH COVERS MAY BE USED. SEE PLATE M23.

5 DESIGN IS BASED ON: 250 PSF LIVE LOAD; 0 SURCHARGE; 60 PCF/FT AT REST PRESSURE; AND WATER TABLE BELOW BOTTOM SLAB, PER AASHTO LRFD BRIDGE DESIGN SPECIFICATIONS (1998). NON-TRAFIC TYPE.

6 ALL CELLS SHALL BE GROUTED SOLID WITH 2500 PSI GROUT. TYPE M MORTAR.

7 STRUCTURAL BASE COURSE FOR MANHOLE BOTTOM SLAB NOT SHOWN AND SHALL BE PROVIDED AS REQUIRED BY DESIGN ENGINEER.

8 PAINT ALL METALS:

A. SEE PAINTING SECTION IN STANDARDS FOR PAINT TYPE, SURFACE PREPARATION, ETC.

B. MANHOLE FRAME AND COVER SHALL BE PAINTED WITH ASPHALTUM.

9 SPECIAL DESIGN FOR ROAD GRADES > 5% IS REQUIRED

10 CMU WALL NOT ALLOWED BELOW WATERTABLE (WT)

11 FOR FLANGED END VALVES INSTALL FE x B ADAPTERS (LENGTH TO SUIT), FE X FE DISMANTLING JOINT ON ONE SIDE OF VALVE, AND CAPPING COLLARS.

SIZE VALVE	L	HT
12" & 16"	5'-4"	6'-0"
18" & 20"	6'-0"	6'-0"
24"	6'-8"	6'-0"
>24"	N.A.	N.A.

2002
REVISION

MAUI

TYPE "A-1" MANHOLE (NON-TRAFFIC)
FOR BUTTERFLY VALVES, CMU
SCALE: NTS

STANDARD DETAILS

MH11

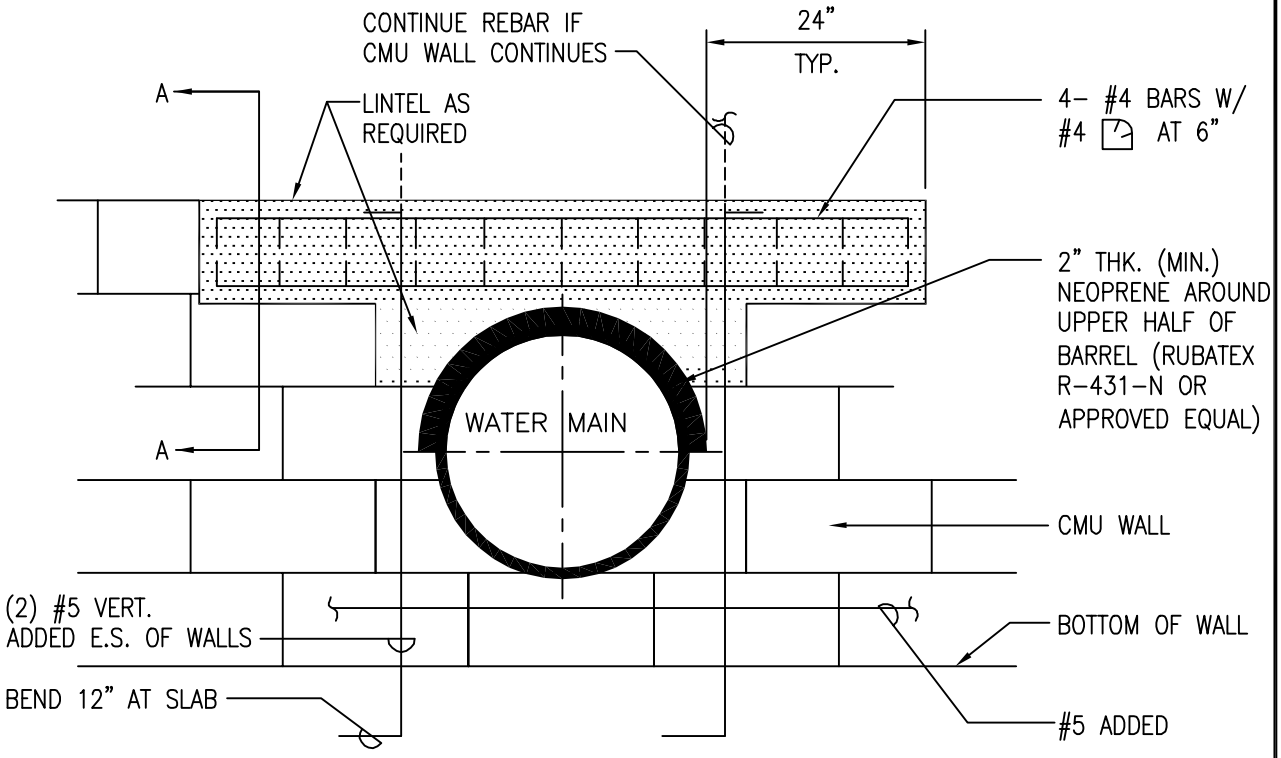

LONGITUDINAL SECTION THRU LINTEL

NOTE:

CONCRETE SHALL BE DWS 3500

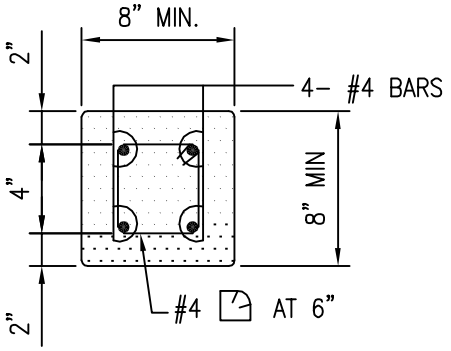

SECTION THRU LINTEL(A-A)

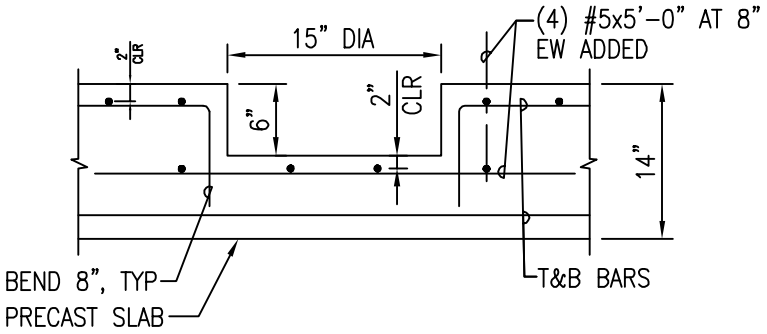

CLOSED PRECAST SUMP
FOR HIGH WATER TABLE
CONDITION

			2002
			REVISION
KAUAI MAUI OAHU	**MANHOLE DETAIL OF LINTEL AND FILLER** TYPICAL DETAIL SCALE: NTS	STANDARD DETAILS	MH12

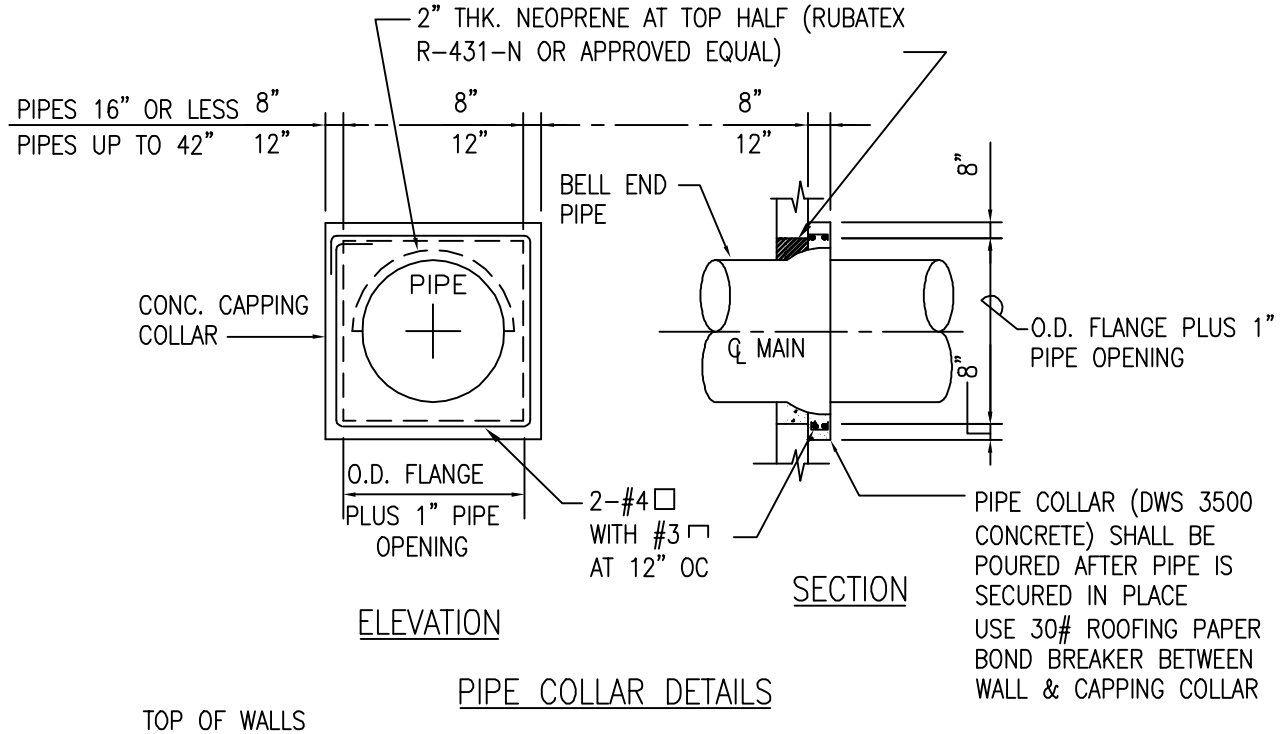

PIPE COLLAR DETAILS

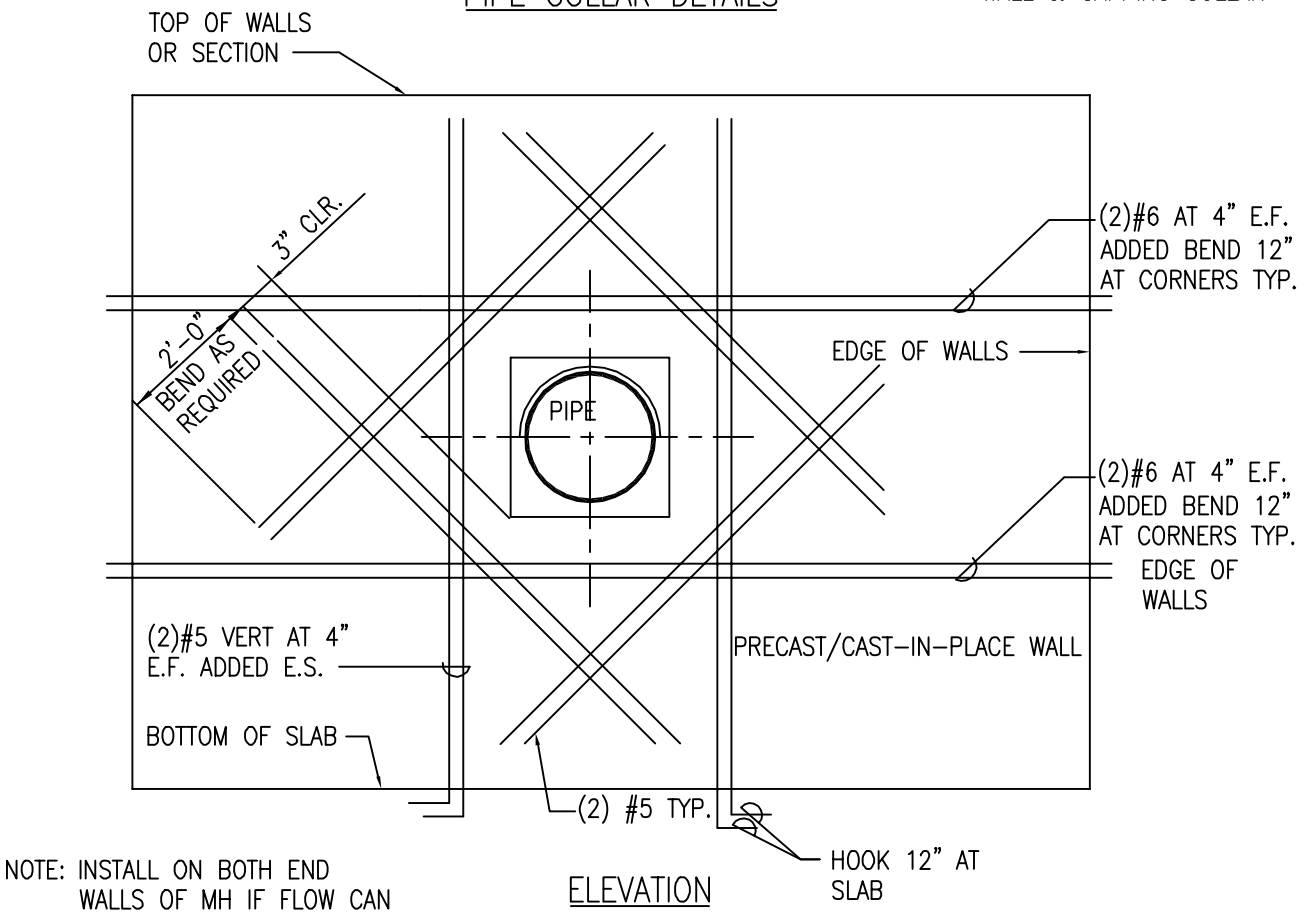

NOTE: INSTALL ON BOTH END WALLS OF MH IF FLOW CAN GO BOTH WAYS.

ELEVATION

WALL PIPE OPENING
ADDED REBARS DETAIL

			2002
			REVISION
KAUAI OAHU MAUI	**MANHOLE** **PIPE COLLAR DETAIL** SCALE: NTS	STANDARD DETAILS	MH13

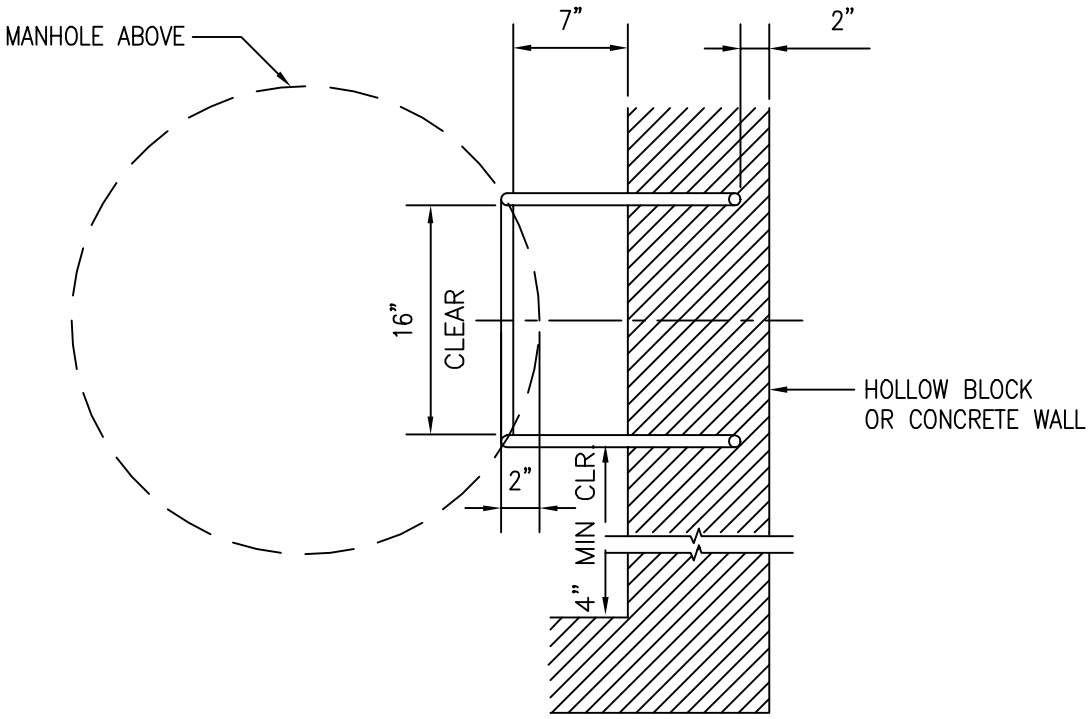

RUNG DETAIL

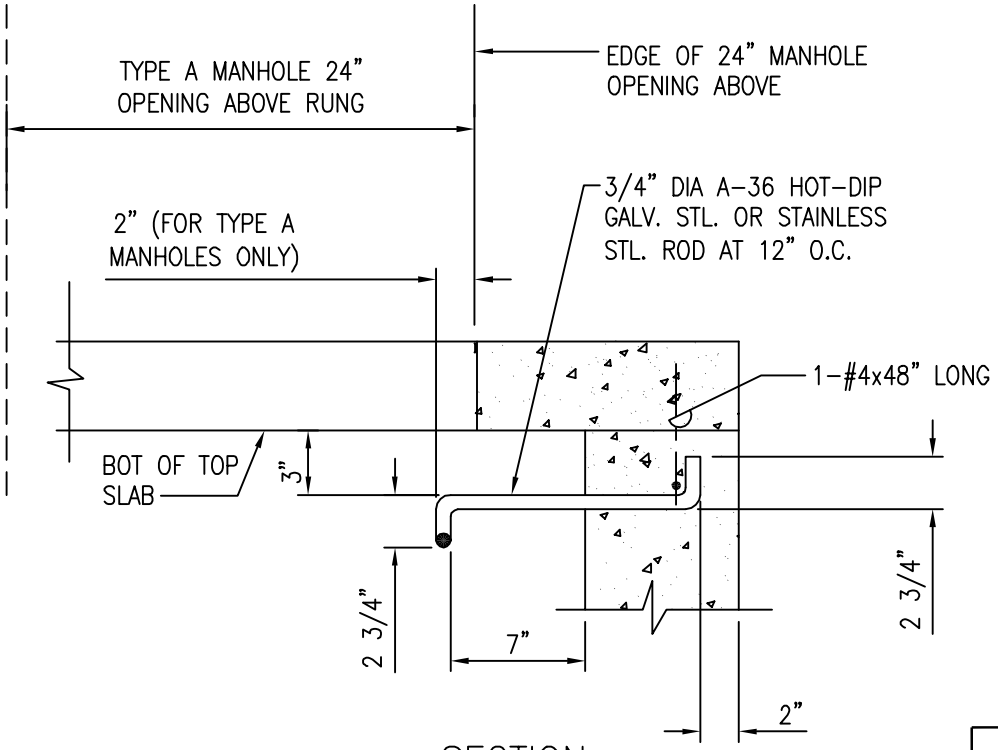

SECTION

			2002
			REVISION
KAUAI OAHU MAUI	METAL RUNG DETAIL SCALE: NTS	STANDARD DETAILS	MH14

2" DIAMETER PIPE CHASE THREADED TO RECEIVE 2" CAP. FLOOD COAT CAP & PIPE (EXPOSED SURFACE) WITH GILSOMASTIC OR APPROVED EQUAL.

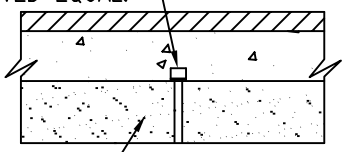

LIFT PORT DETAIL

STANDARD 24" MANHOLE & 6" FRAME & COVER. SET COVER FLUSH WITH GROUND, SHIM WITH GROUT OR BRICK AS REQUIRED. MANAGER'S APPROVAL IS REQUIRED IF TOP OF MH FRAME & COVER IS SET GREATER THAN 22" FROM THE TOP MH RUNG.

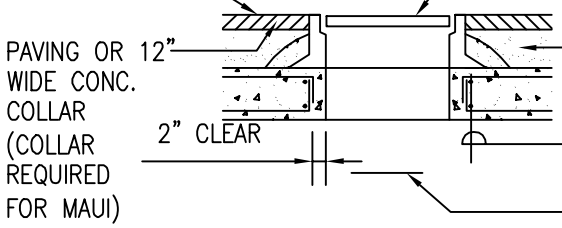

24" MANHOLE & 6" VALVEBOX SETTING DETAIL

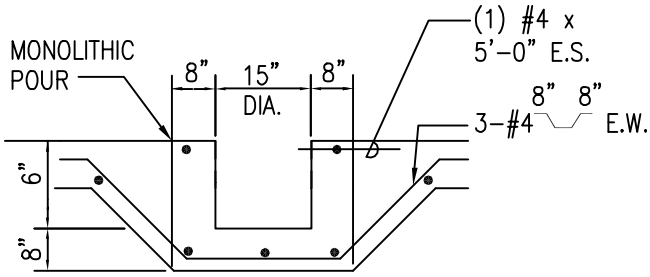

INSTALL SEALED SUMP IN LIEU OF OPEN HOLE WITH CRUSHED ROCK WHEN BOTTOM SLAB IS LOCATED BELOW ESTIMATED WATER TABLE

CAST-IN-PLACE SUMP DETAIL

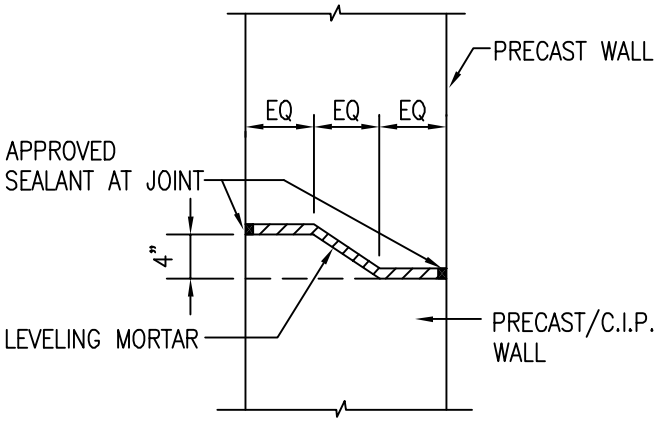

TYP. CONN DETAIL

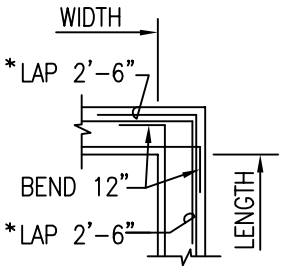

DOUBLE LAYER TYP HORIZ REINFORCEMENT

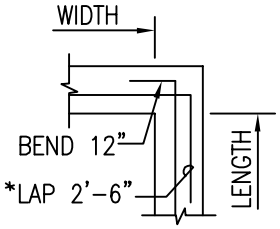

SINGLE LAYER TYP HORIZ REINFORCEMENT

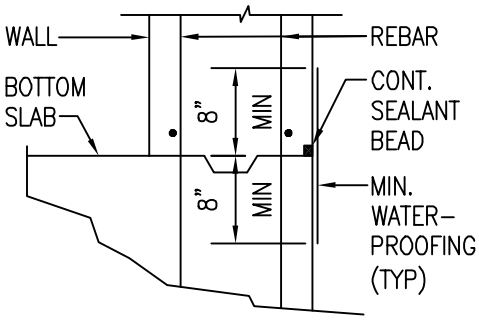

CONSTRUCTION JOINT AT BOTH SLAB AND WALL

* NOTE:
UNLESS OTHERWISE NOTED ON PLANS

			2002
			REVISION
KAUAI OAHU MAUI	**MANHOLE** **MISCELLANEOUS DETAILS** SCALE: NTS	STANDARD DETAILS	MH15

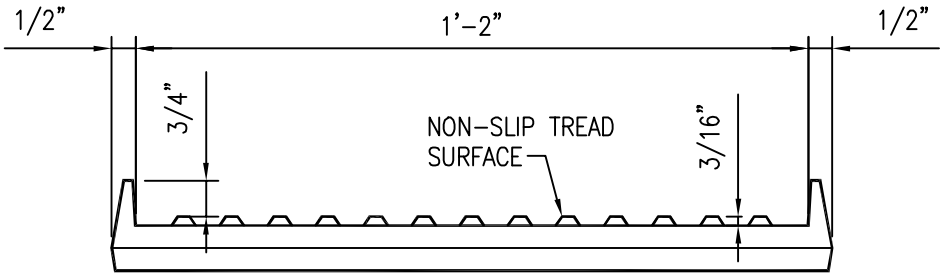

ELEVATION

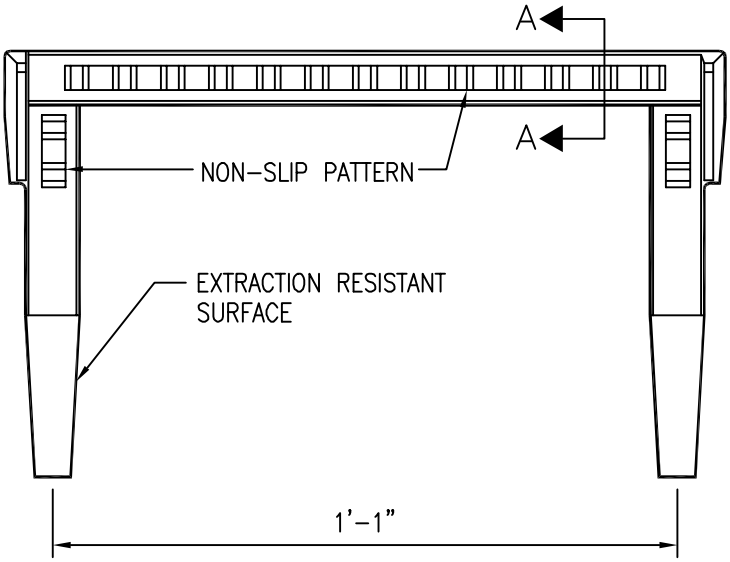

PLAN

NOTES:

1. ALL FABRICATION DIMENSIONS INDICATED ARE MINIMUM.
2. SEE PLATE MH14 FOR MANHOLE LOCATION OVER RUNG CENTERLINE.
3. STEP TO BE INSTALLED DURING CONSTRUCTION OF THE WALL. NO INSTALLATION INTO EXISTING WALL.

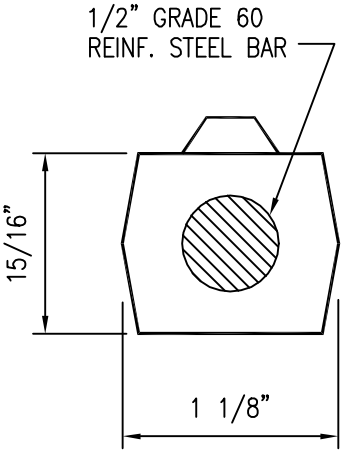

SECTION A-A

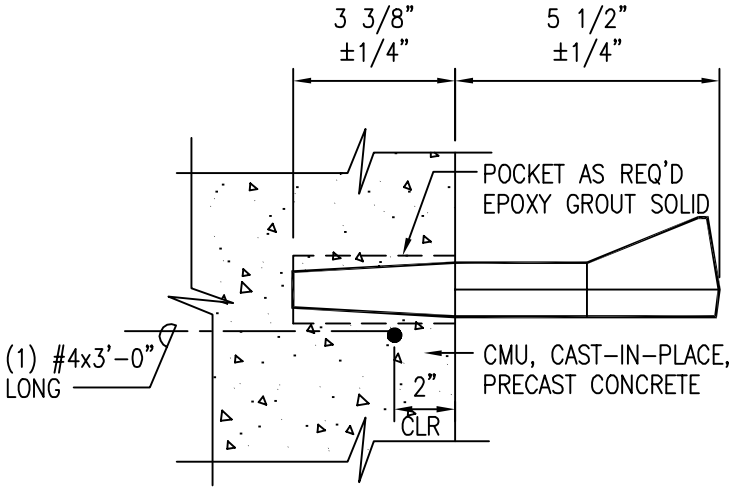

SIDE ELEVATION

			2002
			REVISION
KAUAI OAHU	POLYPROPYLENE PLASTIC RUNG SCALE: NTS	STANDARD DETAILS	MH16

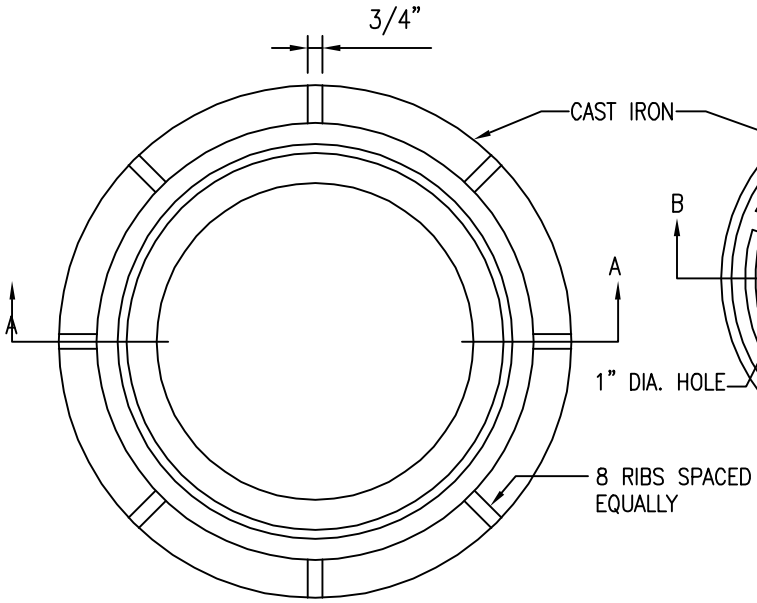

PLAN
NOT TO SCALE

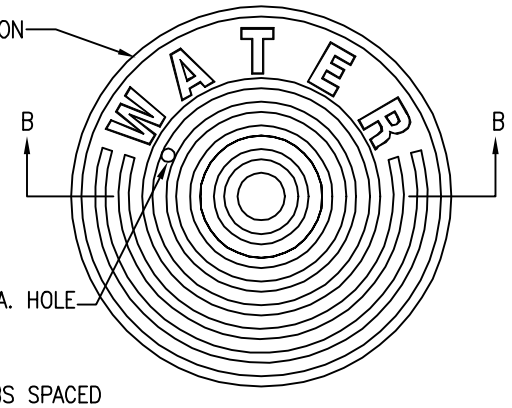

PLAN
NOT TO SCALE

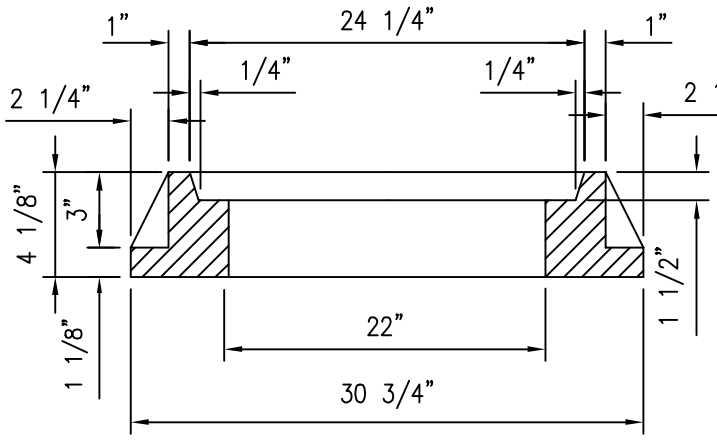

SECTION A–A
NOT TO SCALE

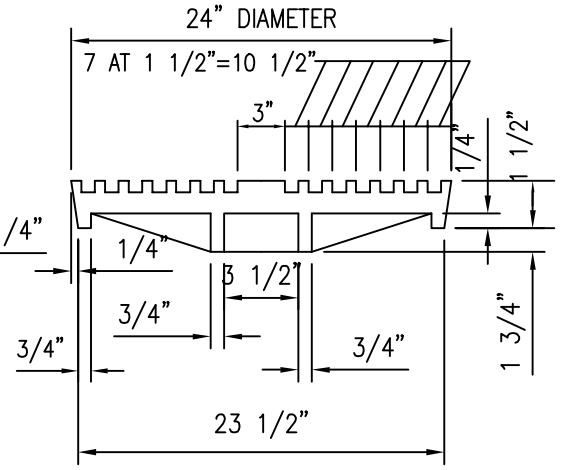

SECTION B–B
NOT TO SCALE

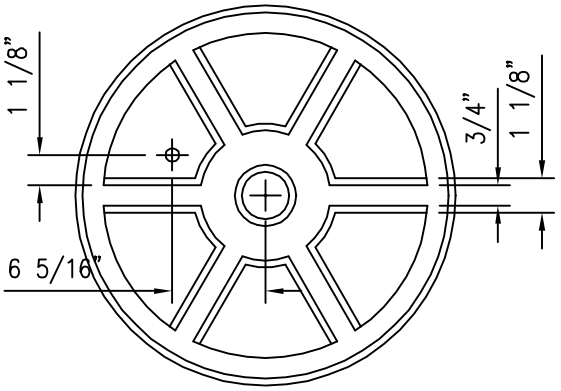

PLAN
NOT TO SCALE

NOTE:

ALL CASTINGS SHALL BE MADE ACCURATELY TO THE DIMENSIONS SHOWN. SEAT AND COVER SHALL BE MACHINED, NOT GROUND TO SECURE FLAT AND TRUE SURFACES. THE COVER SHALL NOT RATTLE IN ANY POSITION.

SEE TABLE 200–10 FOR MIN WEIGHTS.

			2002
			REVISION
KAUAI OAHU MAUI HAWAII	**MANHOLE FRAME & COVER** CAST IRON, 24" SIZE SCALE: NTS	STANDARD DETAILS	MH17

NOTES FOR PRECAST MH

1. CONCRETE SHALL BE DWS 3500; REINFORCING STEEL SHALL BE GRADE 60
2. REFER TO MH14 FOR DETAILS OF RUNG
3. REFER TO SECTION 205.08 BALL CORPS. FOR VALVES AND TABLE AND TABLE 200-9 OF THE WATER SYSTEM STANDARD FOR THE REQ'D BALL CORP SIZES
4. OMIT DRAIN HOLES AND CRUSHED ROCK FOR WATERPROOFED MANHOLES
5. DESIGN IS BASED ON: HS-20 LOADING; 5 FEET SURCHARGE; 60 PCF/FT AT REST PRESSURE; AND 4 FEET OF WATER ABOVE BOTTOM SLAB PER AASHTO LRFD BRIDGE DESIGN SPECIFICATIONS (1998)
6. INSTALL BALL CORP W/ APPROVED SERVICE SADDLE ON PVC PIPES (FOR OAHU ONLY)

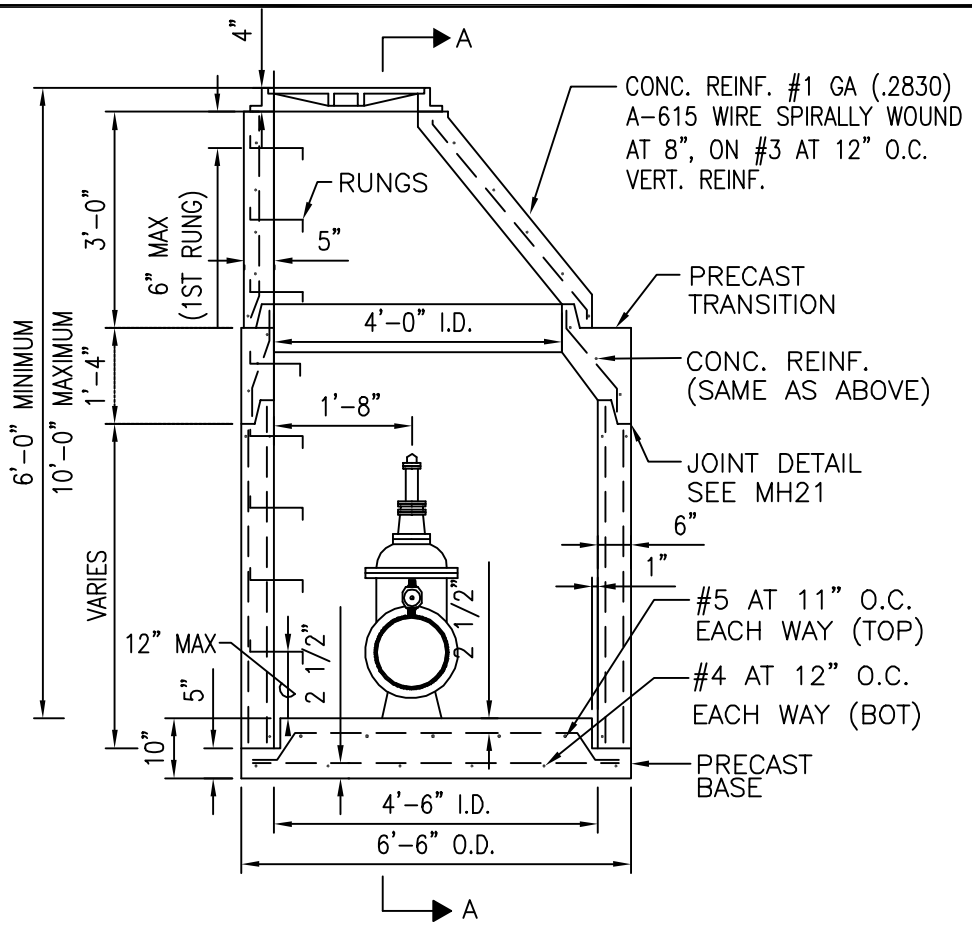

TYPE B MANHOLE

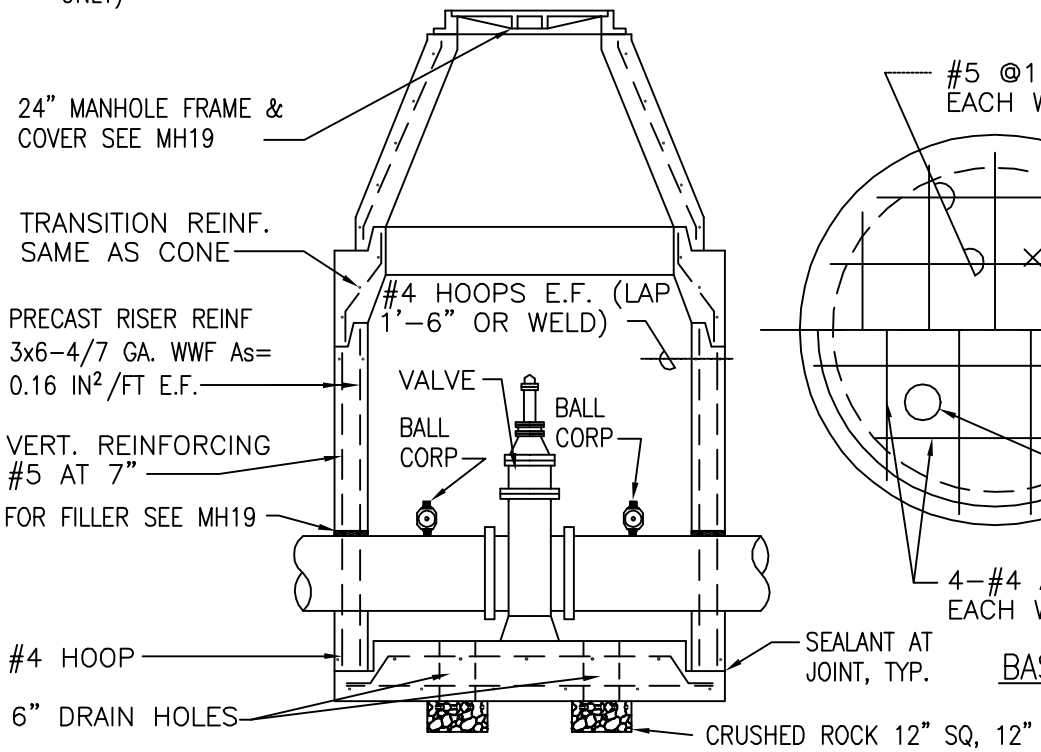

SECTION "A-A"

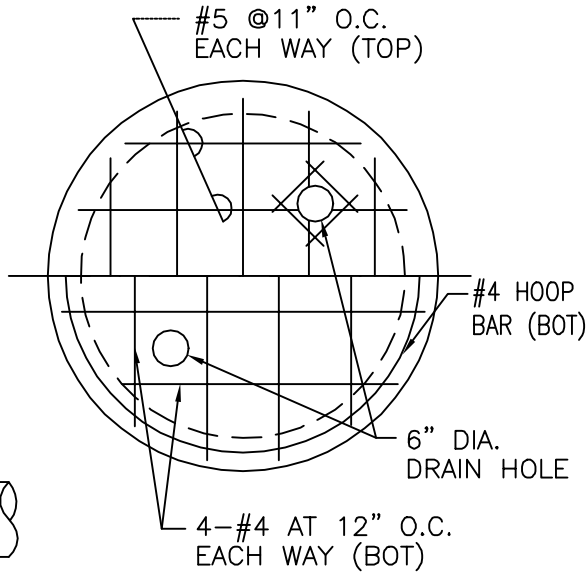

BASE PLAN

			2002
			REVISION
KAUAI OAHU MAUI	**TYPE "B" MANHOLE** GENERAL ARRANGEMENT, PRECAST WALL SCALE: NTS	STANDARD DETAILS	MH18

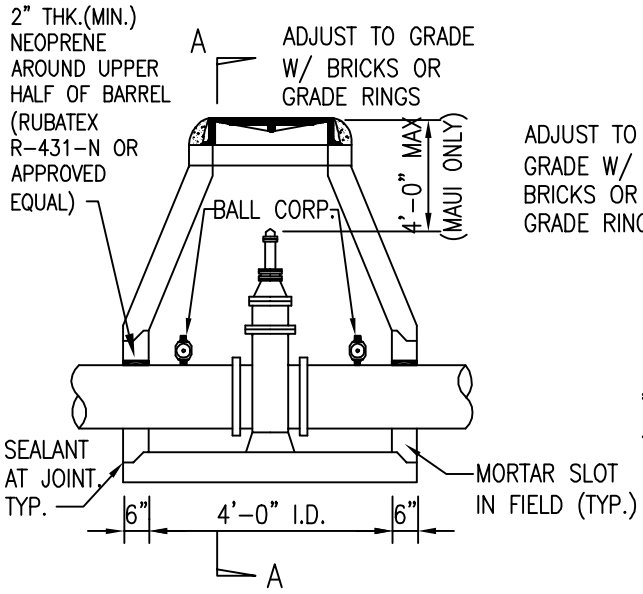

PRE-CAST TYPE C MANHOLE

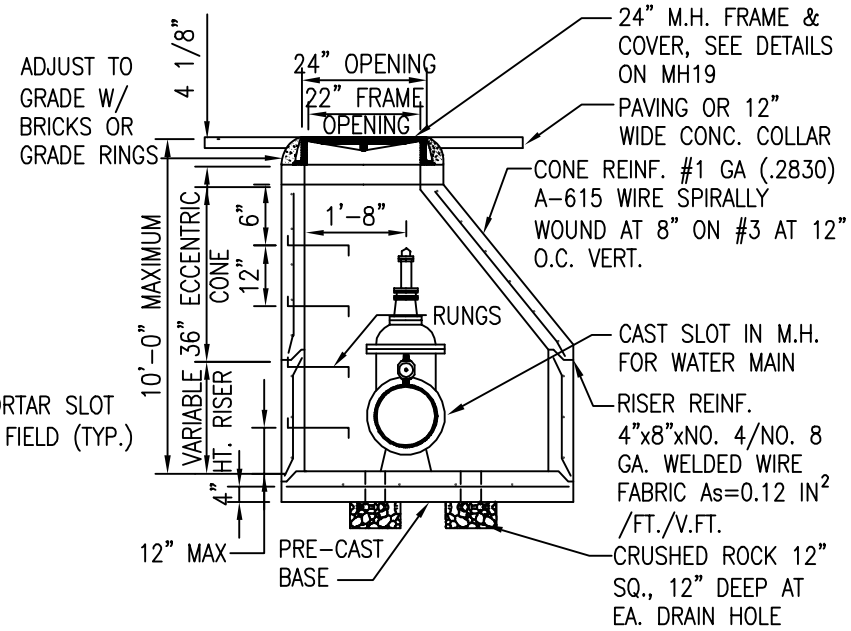

SECTION A-A

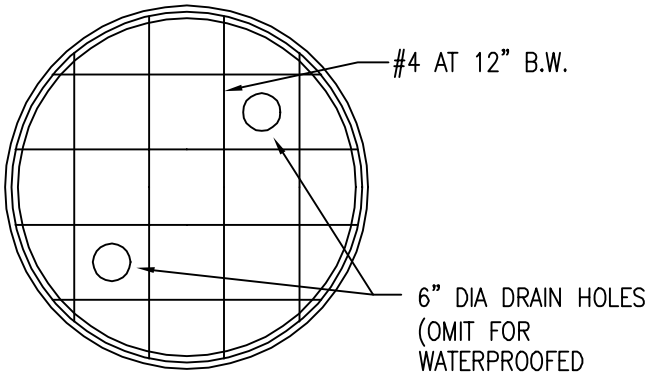

PRE-CAST MANHOLE BASE PLAN

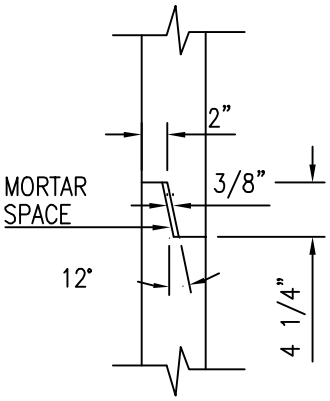

T&G JOINT DETAIL

NOTES FOR PRE-CAST MANHOLE

1. CONCRETE SHALL BE DWS 3500.
2. REFER TO MH14 FOR DETAILS OF RUNG.
3. REFER TO SECTION 205.08 BALL CORPS. FOR VALVES AND TABLE 200-9 OF THE WATER STANDARD FOR THE REQUIRED BALL CORP SIZES.
4. OMIT DRAIN HOLES AND CRUSHED ROCK FOR WATERPROOFED MANHOLES.
5. DESIGN IS BASED ON: HS-20 LOADING; 5 FEET SURCHARGE; 60 PCF/FT AT REST PRESSURE; AND 4 FEET OF WATER ABOVE BOTTOM SLAB, PER AASHTO LRFD BRIDGE DESIGN SPECIFICATIONS (1998)
6. INSTALL BALL CORP W/ APPROVED SERVICE SADDLE ON PVC PIPES (FOR OAHU ONLY)

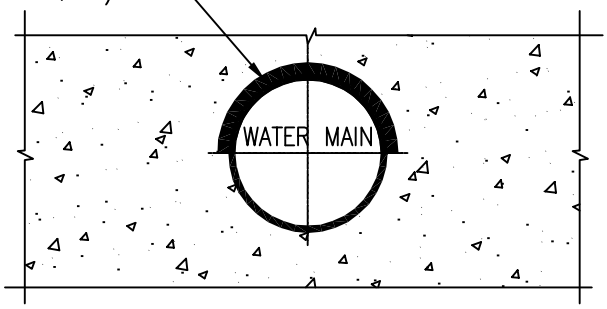

FILLER DETAIL

			2002
			REVISION
KAUAI OAHU MAUI	**TYPE "C" MANHOLE** **GENERAL ARRANGEMENT, PRECAST WALL** SCALE: NTS	STANDARD DETAILS	MH19

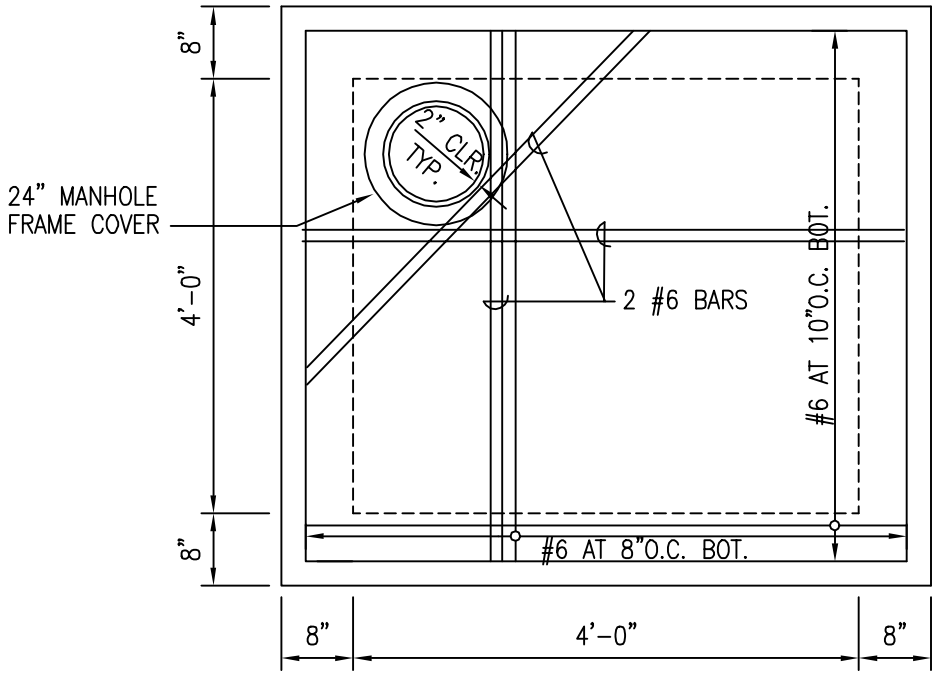

PLAN OF TOP SLAB
(BOTTOM REINFORCEMENT)

NOTES FOR CAST-IN-PLACE AND PRECAST WALL MH:

1. DWS 3500 CONCRETE AND GRADE 60 REINFORCING STEEL.
2. REFER TO MH12, MH14, MH15, MH17 AND MH18 FOR ADDITIONAL DETAILS.
3. REFER TO SECTION 205.08 BALL CORPS FOR VALVES AND TABLE 200-9 OF THE WATER SYSTEM STANDARDS FOR THE REQUIRED BALL CORP. SIZES.
4. PLASTIC RUNGS MAY BE USED. REFER TO MH18 (EXCEPT MAUI).
5. FOR PRECAST WALL MANHOLE, BOTTOM HALF OF MANHOLE MAY BE PRECASTED IF BOTTOM SLAB ELEVATION IS +2' ABOVE ESTIMATED WATER TABLE.
6. DESIGN IS BASED ON: HS-20 LOADING; 5 FEET SURCHARGE; 60 PCF/FT AT REST PRESSURE; AND 4 FEET OF WATER ABOVE BOTTOM SLAB, PER AASHTO LRFD BRIDGE DESIGN SPECIFICATIONS (1998).
7. PAINT ALL METALS:
   A. SEE PAINTING SECTION IN STANDARDS FOR PAINT TYPE, SURFACE PREPARATION, ETC.
   B. MANHOLE FRAME AND COVER, VALVE SHALL BE PAINTED WITH ASPHALTUM.
8. PROVIDE HOISTING SYSTEM FOR TRANSPORTATION AND INSTALLATION OF PRECAST WALL.
9. FOR MAUI, IN NON-TRAFFIC AREAS, METAL MH COVERS MAY BE USED. REFER TO M23.

			2002
			REVISION
KAUAI OAHU MAUI	TYPE "D" MANHOLE FOR 2" AIR RELIEF VALVES SCALE: NTS	STANDARD DETAILS	MH20

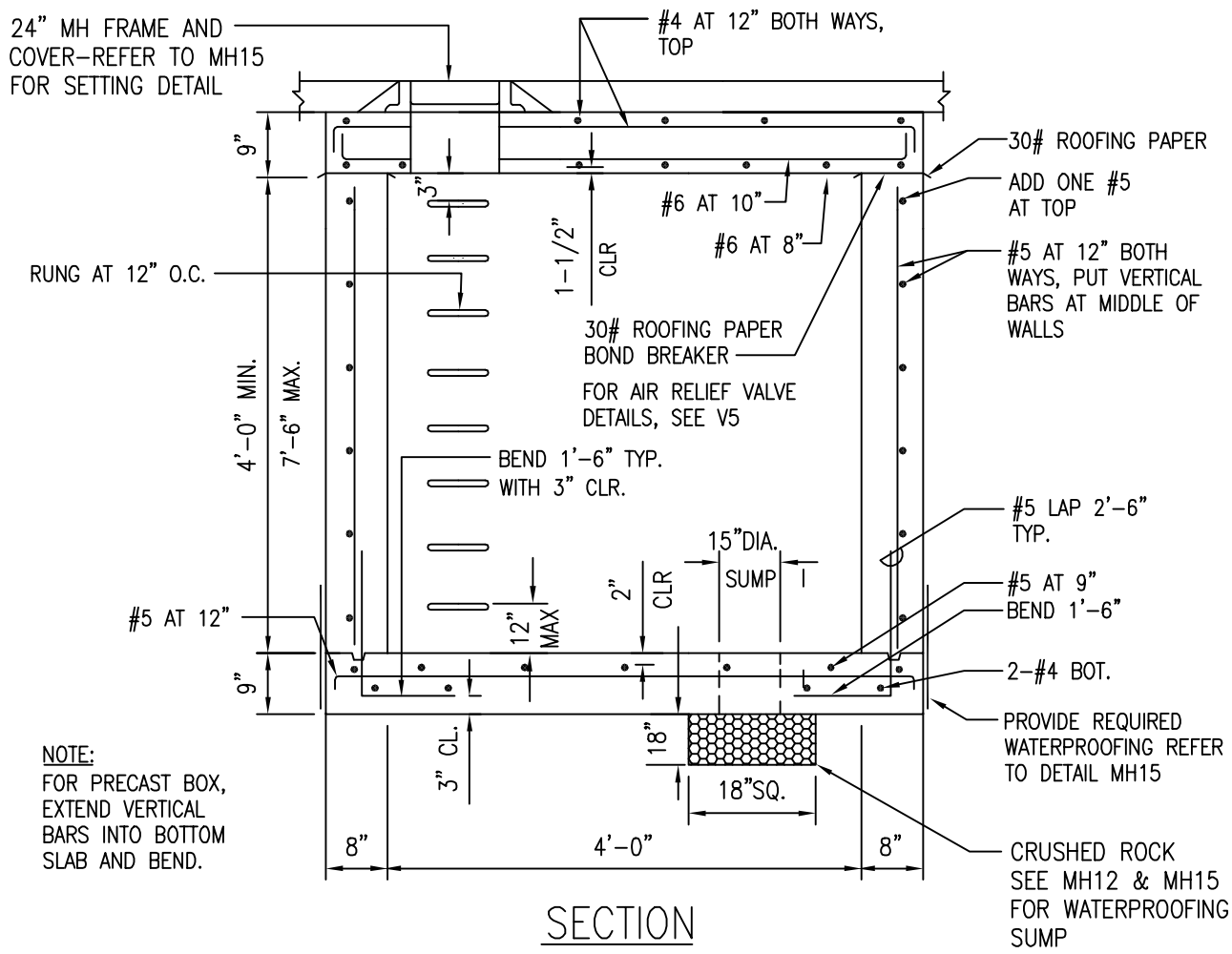

NOTE:
FOR PRECAST BOX, EXTEND VERTICAL BARS INTO BOTTOM SLAB AND BEND.

SECTION

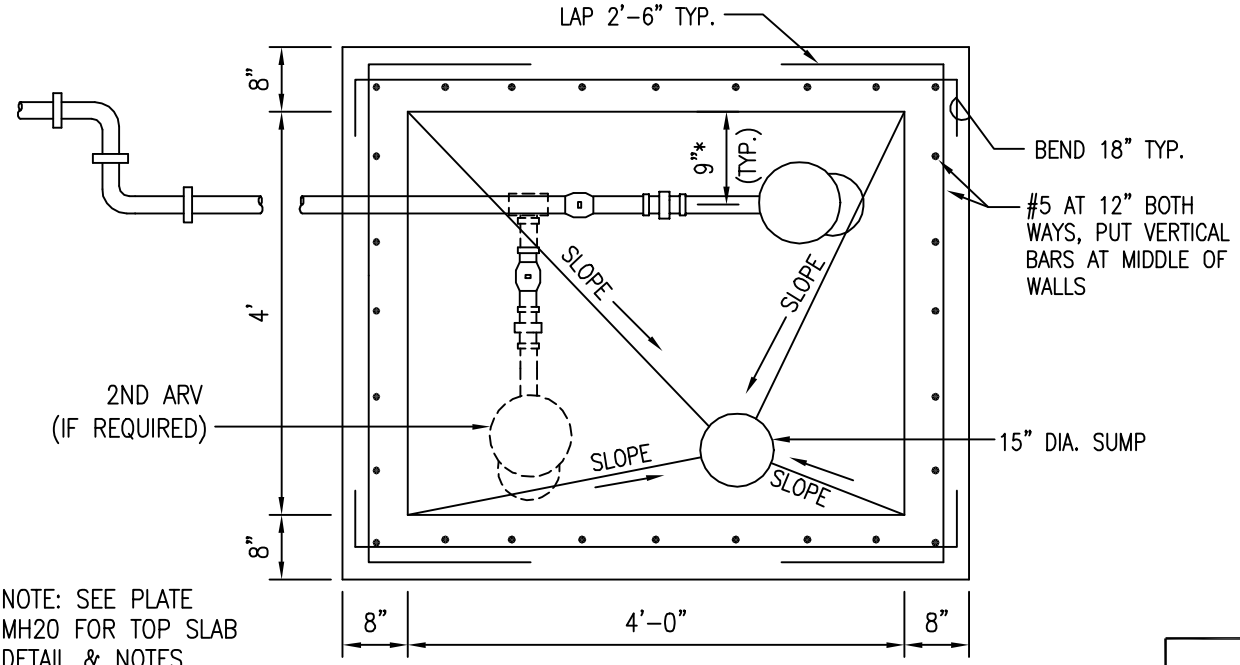

NOTE: SEE PLATE MH20 FOR TOP SLAB DETAIL & NOTES

* LATERAL CENTERED FOR SINGLE ARV

PLAN–SECTION

			2002
			REVISION
KAUAI OAHU MAUI	**TYPE "D" MANHOLE FOR 2" AIR RELIEF VALVES** CAST-IN-PLACE AND PRECAST WALLS SCALE: NTS	STANDARD DETAILS	MH21

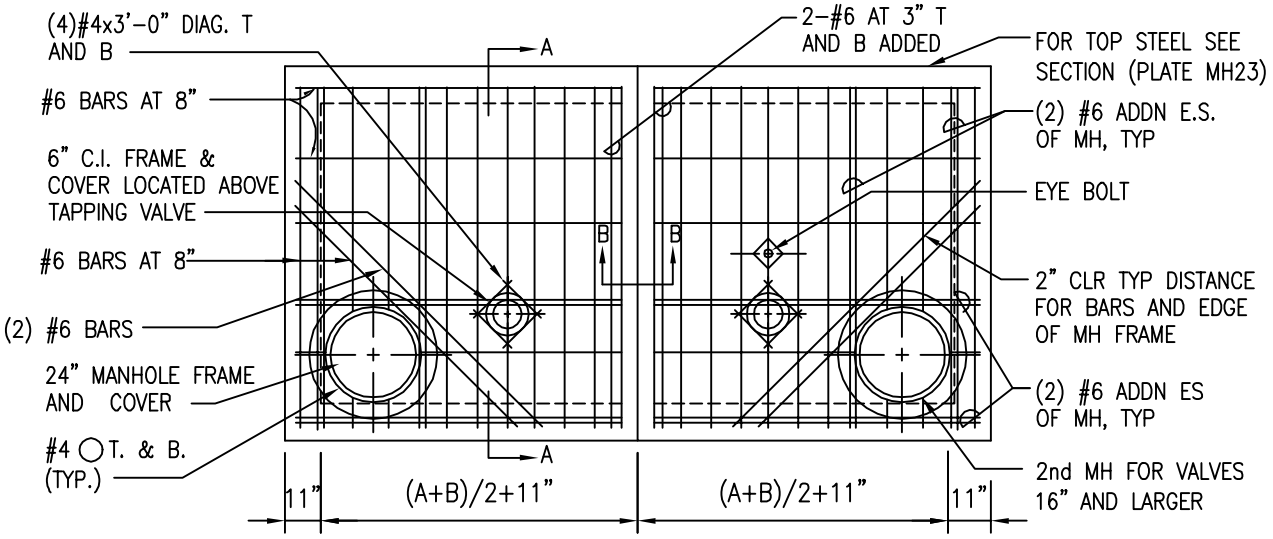

PLAN OF TOP SLAB

(BOTTOM REINFORCEMENT)

NOTE:

LOCATION OF THE EYE BOLT TO BE VERIFIED WITH SIZE OF VALVE

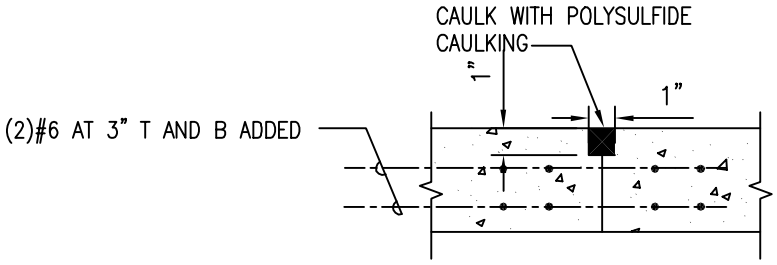

SECTION "B-B"

NOTES: FOR CAST-IN-PLACE WALL MH

1. DWS 3500 CONCRETE AND GRADE 60 REINFORCING STEEL.
2. REFER TO SECTION 205.08 BALL CORPS. FOR VALVES ABD TABLE 200-9 OF THE WATER SYSTEM STANDARD FOR THE REQUIRED BALL CORP. SIZES.
3. REFER TO MH12, MH13, MH14, MH15 AND MH17 FOR ADDITIONAL DETAILS.
4. DESIGN IS BASED ON: HS-20 LOADING; 5 FEET SURCHARGE; 60 PCF AT REST PRESSURE; AND 4 FEET MAX OF WATER ABOVE BOTTOM SLAB, PER AASHTO LRFD BRIDGE DESIGN SPECIFICATIONS (1998).
5. STRUCTURAL BASE FOR MANHOLE NOT SHOWN AND SHALL BE PROVIDED AS REQUIRED BY DESIGN ENGINEER.
6. PAINT ALL METALS:
   A. MANHOLE FRAME AND COVER, VALVE SHALL BE PAINTED WITH ASPHALTUM.
   B. SEE PAINTING SECTION IN STANDARDS FOR PAINT TYPE, SURFACE PREPARATION, ETC.
7. SEE PLATES MH23 AND MH24 FOR SECTIONS.

			2002
			REVISION
KAUAI OAHU	**TYPE "E" TAPPING TEE MANHOLE** CAST-IN-PLACE WALL SCALE: NTS	STANDARD DETAILS	MH22

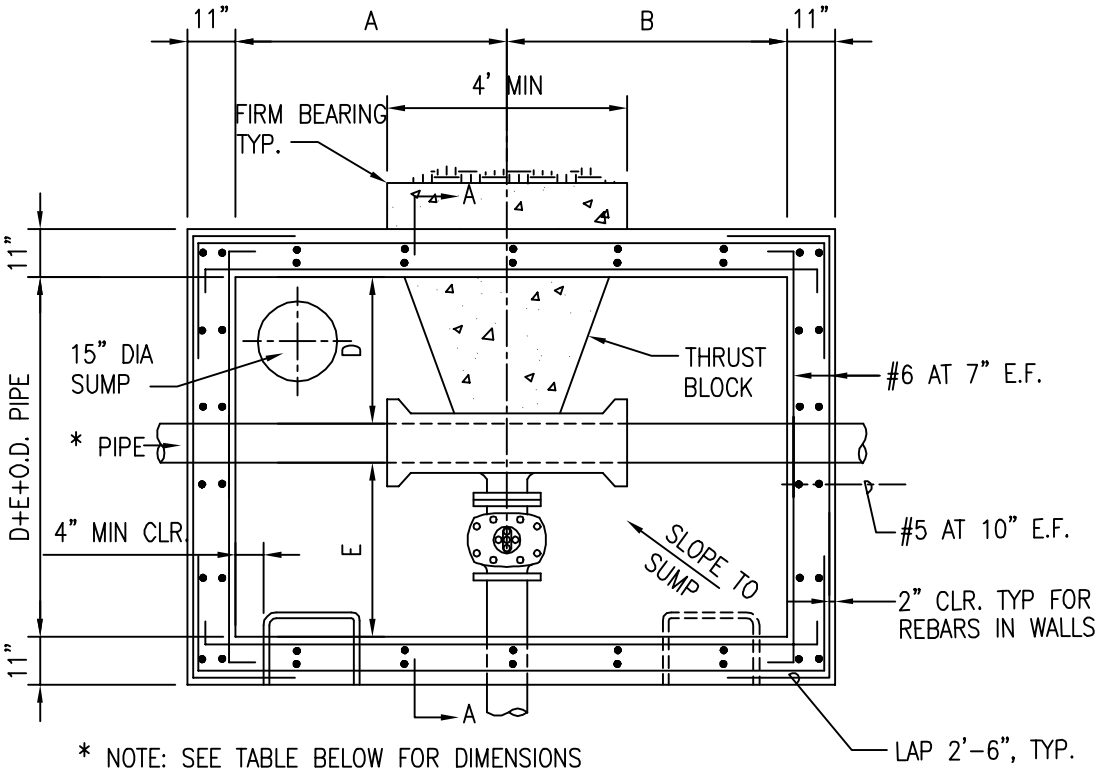

PLAN–SECTION

TAPPING TEE MANHOLE DIMENSION						
PIPE DIAMETER	MATERIAL	A	B	C	D	E
4"–12"	CI AND DI	3'–0"	5'–0"	1'–0"	1'–6"	5'–0"
16"–20"	CI AND DI	3'–0"	5'–6"	1'–6"	1'–6"	6'–0"
24"–42"	CI AND DI	3'–6"	6'–0"	1'–6"	1'–6"	6'–0"

NOTES:

1. DIMENSIONS SHALL BE VERIFIED IN FIELD
2. SEE PLATE MH24 FOR SECTION
3. TAPPING VALVE SHALL BE OPENED ONLY AFTER THRUST BLOCK IS POURED AND CURED IN PLACE. FOR THRUST BLOCK WITH STRUCTURAL STEEL STRUTS, IF NEEDED FOR LARGER SIZED PIPES, THE MANHOLE WALL SHALL BE BUILT AROUND THE BLOCK OR STRUCTURAL STRUTS.

			2002
			REVISION
KAUAI OAHU	TYPE "E" TAPPING TEE MANHOLE CAST-IN-PLACE WALL SCALE: NTS	STANDARD DETAILS	MH23

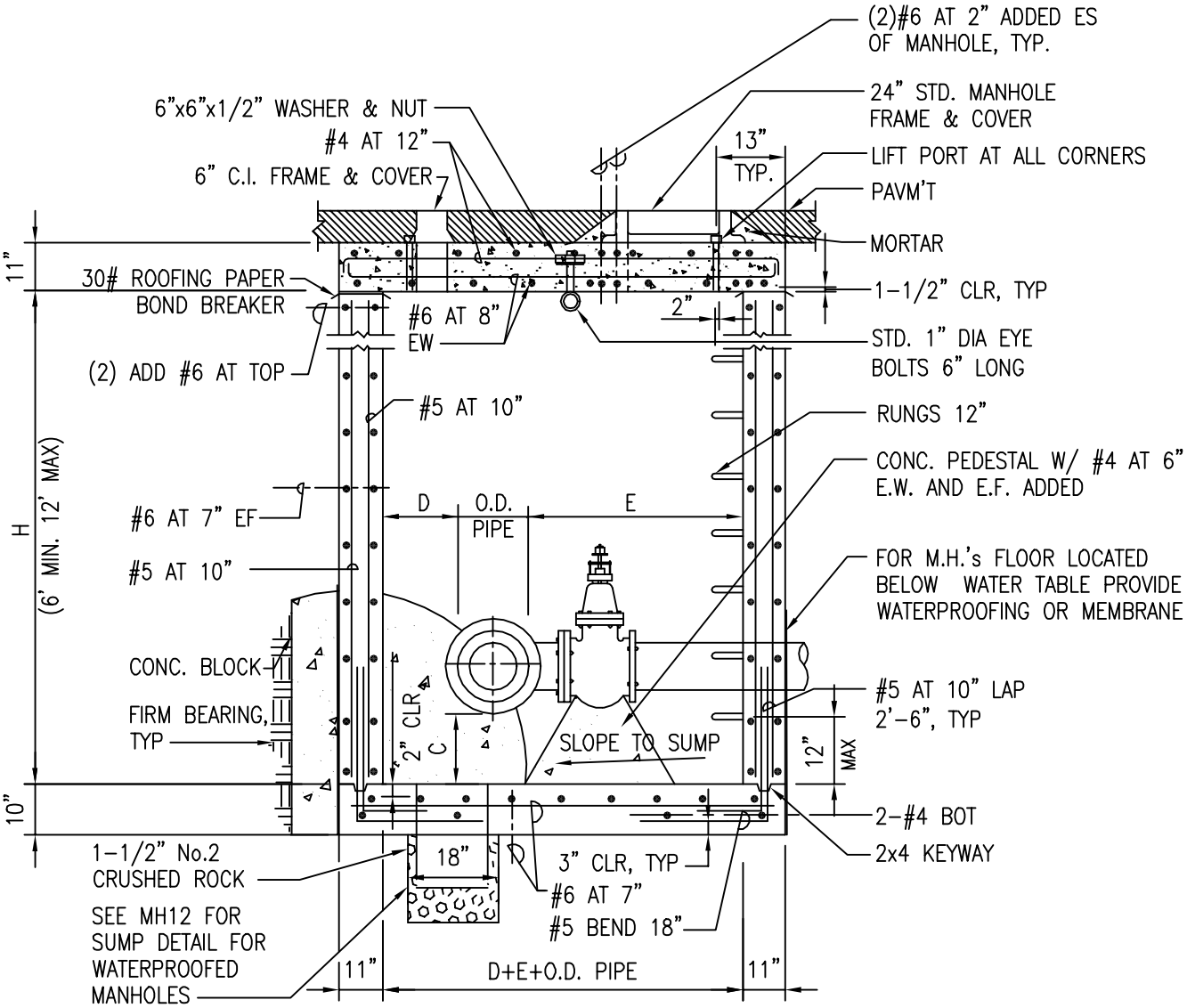

SECTION A-A

SEE PLATE MH22 FOR TOP SLAB REINF.
SEE PLATE MH23 FOR TOP WALL REINF.

			2002
			REVISION
KAUAI OAHU	TYPE "E" TAPPING TEE MANHOLE CAST-IN-PLACE WALL SCALE: NTS	STANDARD DETAILS	MH24

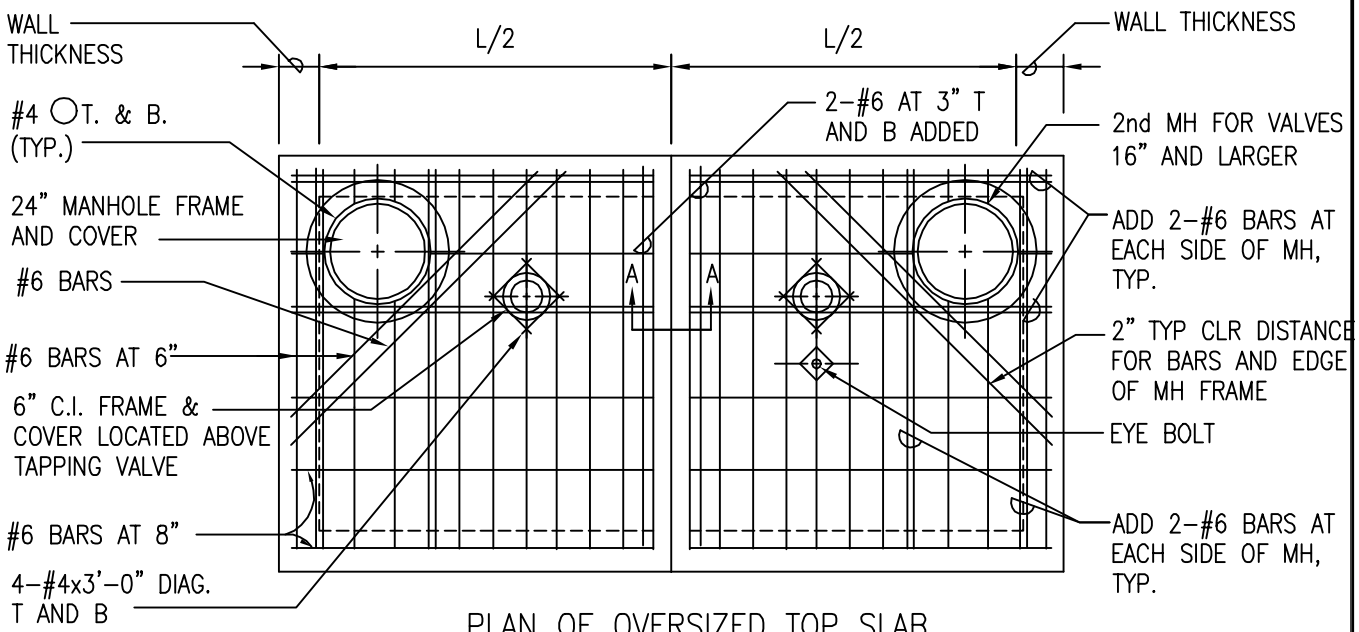

PLAN OF OVERSIZED TOP SLAB
(BOTTOM REINFORCEMENT)

NOTE:

1. LOCATION OF THE EYE BOLT TO BE VERIFIED WITH SIZE OF VALVE. REFER TO MH1, MH2, MH3, MH4 AND MH5 FOR DETAILS.
2. PROVIDE LIFT PORTS FOR SLAB AT FOUR CORNERS MINIMUM 2" AWAY FROM THE WALL.
3. PROVIDE TWO SECTIONS OF SLAB WHEN TOTAL WEIGHT OF THE SINGLE PIECE OF SLAB EXCEEDS 10 KIPS.
4. SEE PLATE MH1 FOR DETAILS NOT SHOWN.

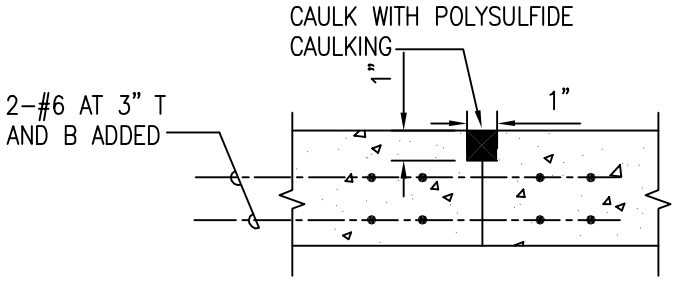

SECTION "A-A"

			2002
			REVISION
KAUAI OAHU MAUI HAWAII	OVERSIZED TOP SLAB DETAIL SCALE: NTS	STANDARD DETAILS	MH25

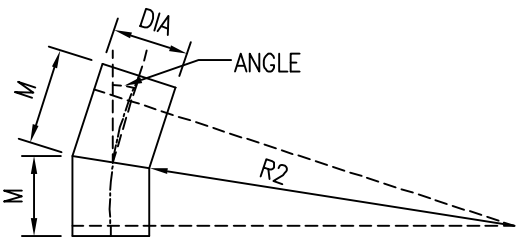

2 PIECE ELBOW
6° TO 22-1/2° INCLUSIVE

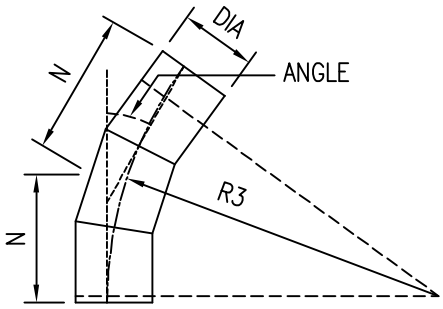

3 PIECE ELBOW
OVER 22-1/2° TO 45° INCLUSIVE

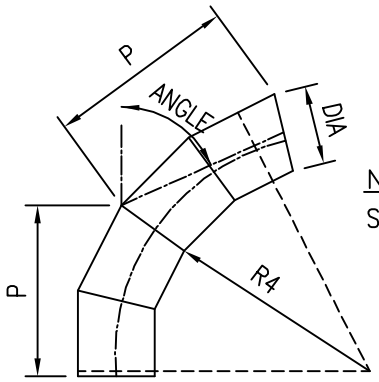

NOTE:
SEE P5

4 PIECE ELBOW
OVER 45° TO 67-1/2° INCLUSIVE

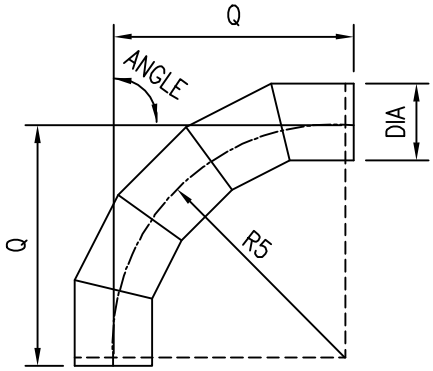

5 PIECE ELBOW
OVER 67-1/2° TO 90° INCLUSIVE

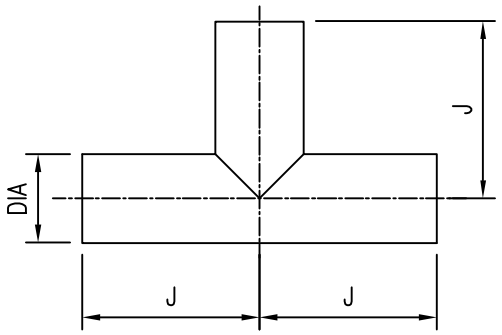

TEE

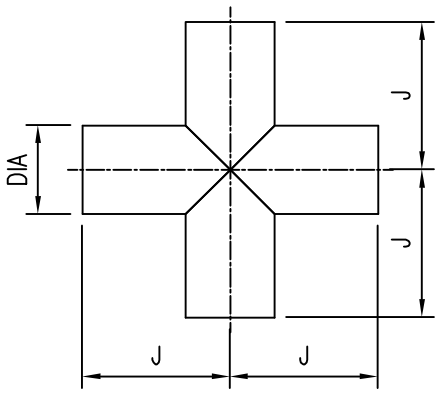

CROSS

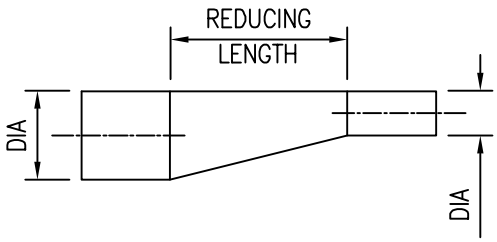

REDUCER

SEE PLATE P2 FOR DIMENSIONS

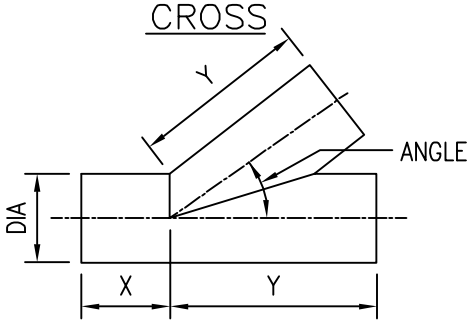

LATERAL
30° MINIMUM – 75° MAXIMUM

2002	
REVISION	

KAUAI OAHU MAUI	**CONCRETE CYLINDER PIPE** **MISCELLANEOUS DETAIL** **SCALE: NTS**	STANDARD DETAILS	P1

STANDARD FITTING DIMENSIONS
FOR PLATE P1

DIAMETER	TEE		CROSS (BOTH WAYS)	LATERAL (30° TO 75°)		ELBOWS (CENTER TO END)							
						2 PIECE (UP TO 22 1/2°)		3 PIECE (22 1/2° TO 45°)		4 PIECE (45° TO 67 1/2°)		5 PIECE (67 1/2° TO 90°)	
	RUN	OUTLET		RUN	OUTLET								
	J + J	J	J + J	X + Y	Y	M	R2	N	R3	P	R4	Q	R5
16"	34"	17"	34"	62"	52"	12"	60"	18"	44"	26"	39"	44"	40"
18"	36"	18"	36"	66"	56"	12"	60"	19"	47"	27"	41"	36"	32"
20"	38"	19"	38"	72"	60"	13"	65"	20"	49"	28"	42"	54"	50"
22"	40"	20"	40"	78"	66"	13"	65"	21"	51"	30"	45"	41"	37"
24"	42"	21"	42"	84"	72"	14"	70"	22"	54"	32"	48"	64"	60"
30"	60"	30"	60"	96"	84"	15"	75"	25"	61"	37"	51"	79"	75"
36"	66"	33"	66"	110"	96"	16"	80"	27"	66"	40"	60"	94"	90"
42"	72"	36"	72"	124"	108"	17"	85"	30"	71"	49"	69"	109"	105"

DIMENSIONS FOR ECCENTRIC REDUCER REDUCING LENGTH

36" X 30" ECCENTRIC REDUCER – LENGTH 66"
30" X 24" ECCENTRIC REDUCER – LENGTH 66"
24" X 20" ECCENTRIC REDUCER – LENGTH 26"
20" X 16" ECCENTRIC REDUCER – LENGTH 26"
42" X 36" ECCENTRIC REDUCER – LENGTH 66"
42" X 30" ECCENTRIC REDUCER – LENGTH 66"

NOTE:

ALL DIMENSIONS SHOWN ARE LAYING LENGTHS.

ALL FITTINGS AND SPECIALS SHALL BE FABRICATED INDEPENDENT FROM PIPE SECTIONS AND IN ACCORDANCE WITH THE DIMENSIONS SHOWN.

ALL FITTINGS AND SPECIALS SHALL BE ALL BELL UNLESS OTHERWISE NOTED.

ALL TEES, WYES, CROSSES AND REDUCERS 16–INCH IN DIAMETER AND LARGER SHALL BE REINFORCED WITH STEEL RIBS OR STEEL CROTCH PLATES WELDED CONTINUOUSLY TO THE CYLINDER OR BY OTHER METHODS TO WITHSTAND THE LONGITUDINAL CRUSHING EFFECT CAUSED BY THE TEST PRESSURE AS CALLED FOR IN THE PLANS.

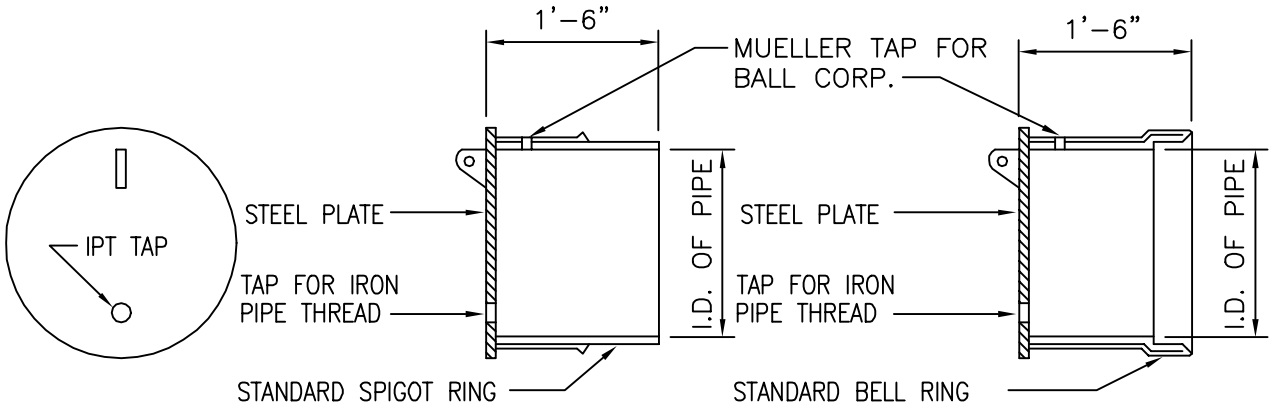

ELEV. OF STEEL PLATE SECTION OF PLUG SECTION OF CAP

DETAIL OF CAP & PLUG

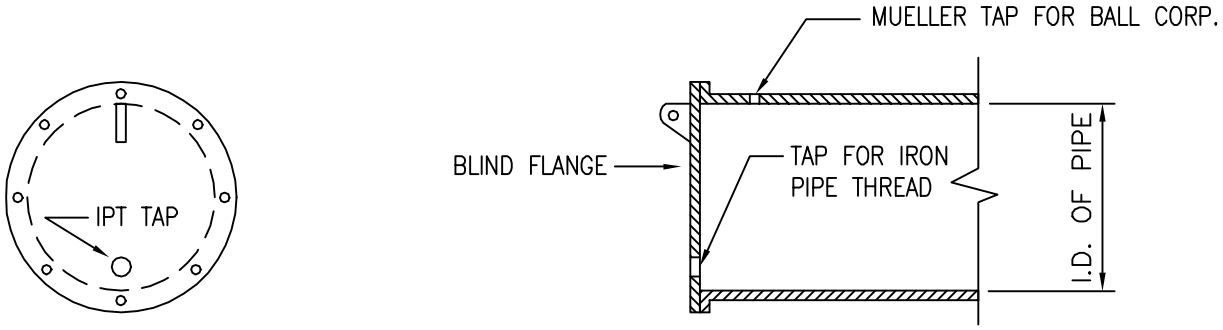

ELEV. OF BLIND FLANGE SECTION

DETAIL OF BLIND FLANGE

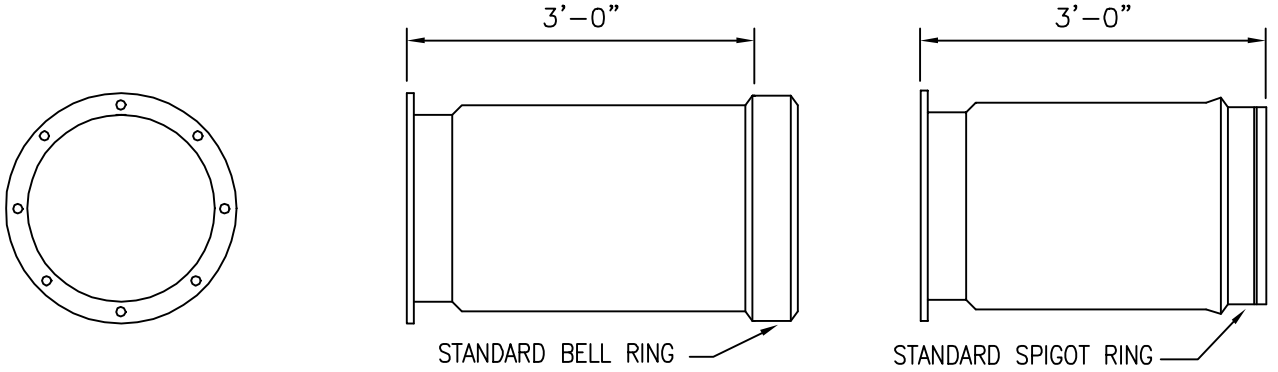

FLANGE END ELEVATION ELEVATION

DETAIL OF ADAPTER

NOTE:
FLANGE CLASS SHALL BE AS SPECIFIED IN THE PLANS.

			2002
			REVISION
KAUAI OAHU MAUI	**CONCRETE CYLINDER PIPE** MISCELLANEOUS DETAIL SCALE: NTS	STANDARD DETAILS	P3

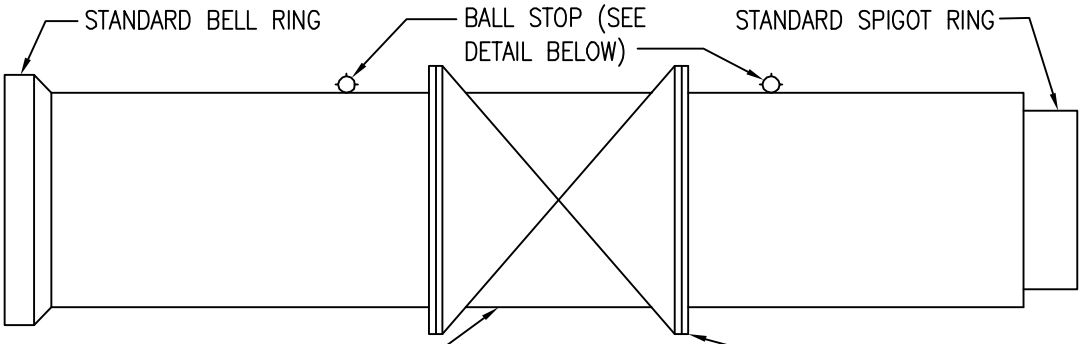

ELEVATION

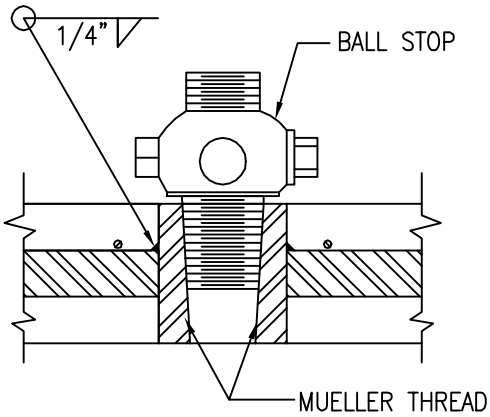

SECTION THRU CONCRETE PIPE

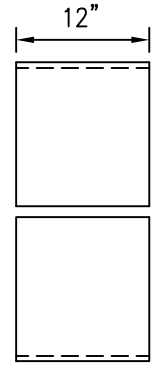

ELEVATION

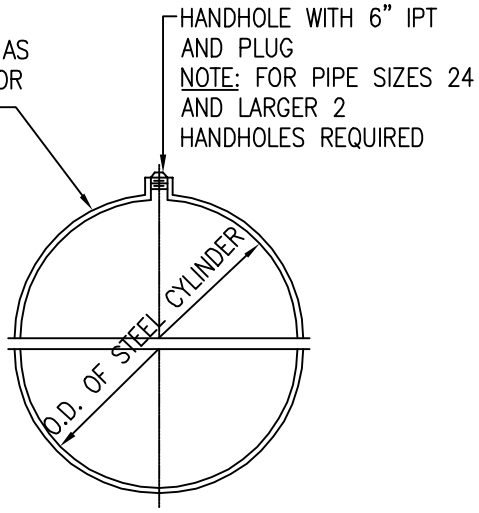

SECTION

DETAIL AT BALL STOP

DETAIL OF SPLIT BUTT STRAP

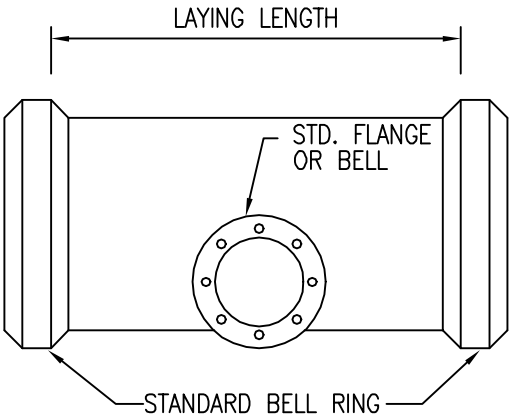

ELEVATION

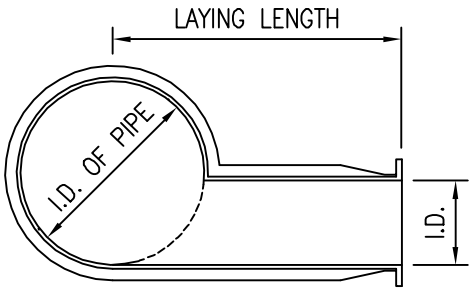

SECTION AT OUTLET

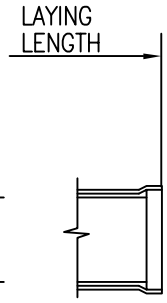

BELL SECTION

NOTE:
FLANGE CLASS SHALL BE AS SPECIFIED IN THE PLANS.

DETAIL OF BLOW OFF TEE

			2002
			REVISION
KAUAI OAHU MAUI	**CONCRETE CYLINDER PIPE** MISCELLANEOUS DETAILS SCALE: NTS	STANDARD DETAILS	P4

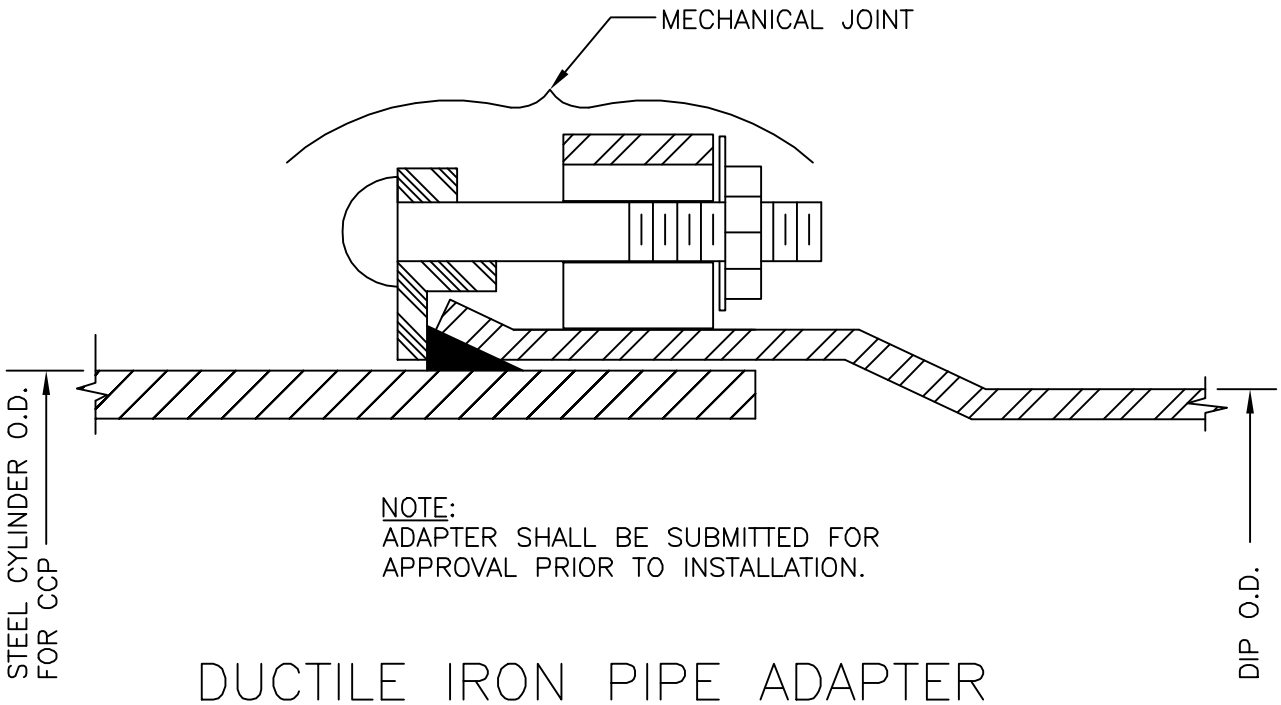

NOTE:
ADAPTER SHALL BE SUBMITTED FOR APPROVAL PRIOR TO INSTALLATION.

DUCTILE IRON PIPE ADAPTER

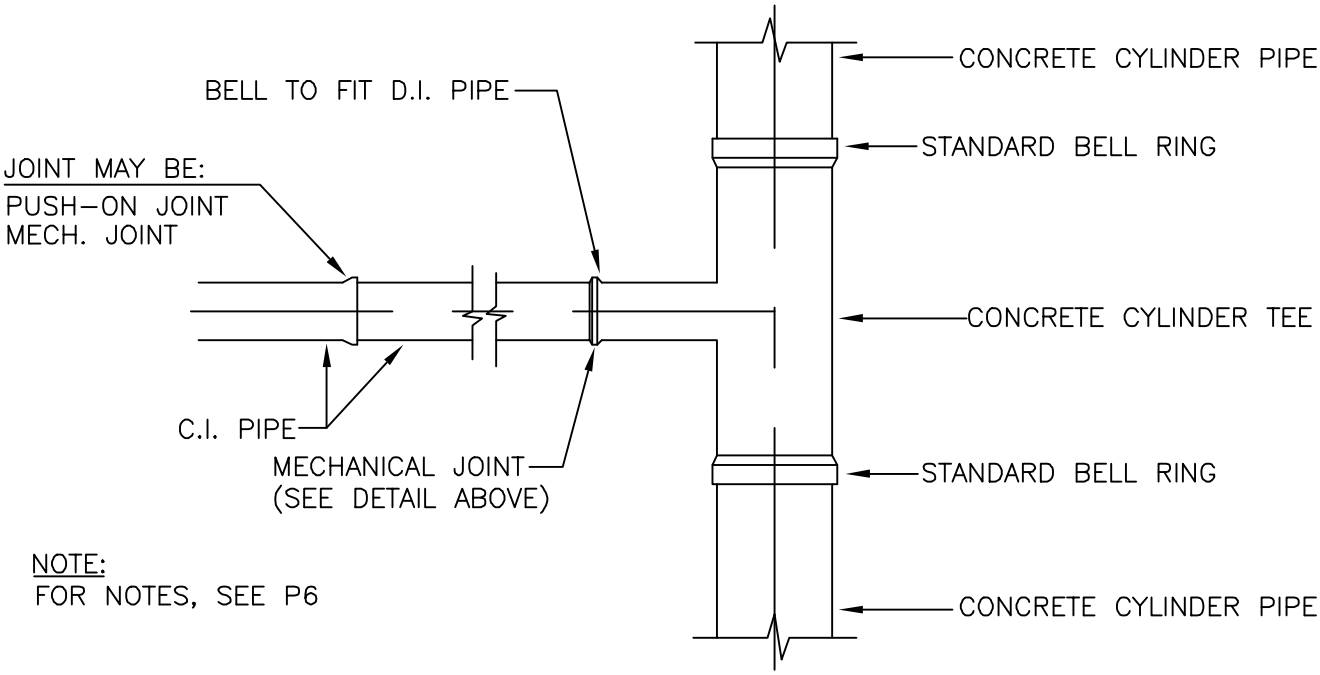

NOTE:
FOR NOTES, SEE P6

TYPICAL CAST IRON PIPE CONNECTION TO CONCRETE CYLINDER PIPE

2002
REVISION

KAUAI OAHU MAUI	CONCRETE CYLINDER PIPE MISCELLANEOUS DETAILS SCALE: NTS	STANDARD DETAILS	P5

NOTES:

1. BOLTS – 1/2" STICKING OUT BEYOND TIGHTENED NUT IS ACCEPTABLE.
2. ADD STEP DOWN (SIMILAR TO A BELL END) OR STOP TO PREVENT INSIDE MORTAR FROM CRACKING WHEN PIPE IS PUSHED IN TOO FAR DURING INSTALLATION.
3. INTERIOR JOINT TO BE FILLED WITH MORTAR GROUT.
4. BOLTS AND NUTS FOR FOLLOWING RING TO BE TYPE 316 STAINLESS STEEL.
5. ONLY C.I. FITTING EPOXY COATING (NSF APPROVED) SHALL BE FACTORY–INSTALLED DURING THE MANUFACTURING OF THE ADAPTER.
6. APPLY BITUMAST COATING TO ALL EXPOSED STEEL, BOLTS, NUTS, FOLLOWING RING AFTER INSTALLATION.
7. INSTALL DOUBLE POLYETHYLENE WRAP (16 MILS MINIMUM) AND 15 LB. ROOFING FELT OVER POLY–WRAP TO PREVENT DAMAGE/PUNCTURES TO POLY–WRAP DURING BACKFILL WORK ON DUCTLINE IRON PIPE ADAPTER.

NOTE:

SEE PLATE P5 FOR DETAIL OF EXIST DUCTILE IRON AND CONCRETE CYLINDER PIPE CONNECTION.

			2002
			REVISION
KAUAI OAHU MAUI	CONCRETE CYLINDER PIPE NOTES SCALE: NTS	STANDARD DETAILS	P6

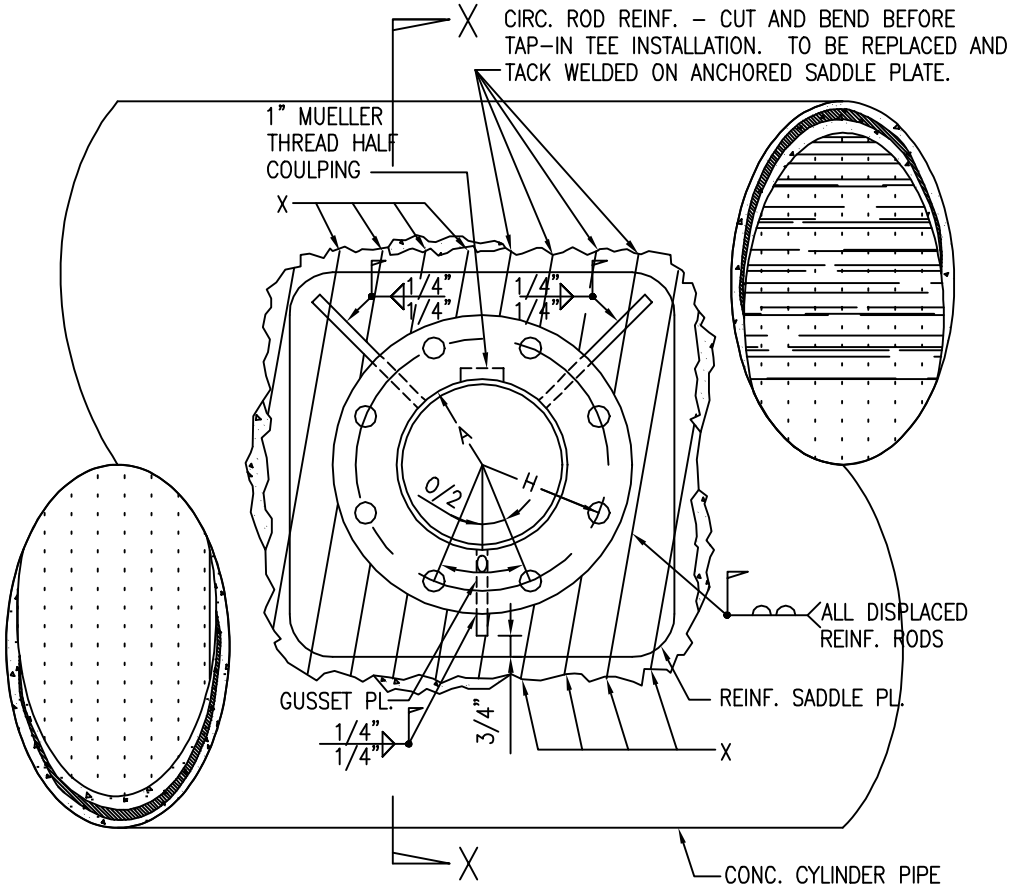

FRONT VIEW

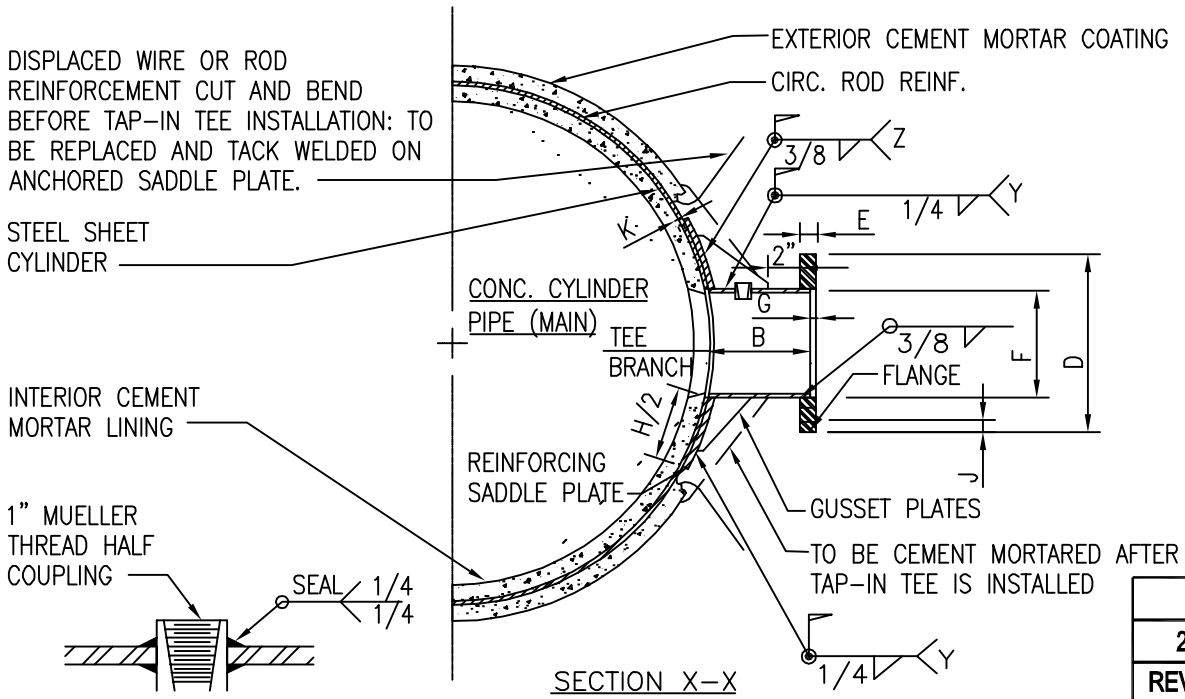

SECTION X–X

	2002
	REVISION

KAUAI OAHU MAUI	**CONCRETE CYLINDER PIPE** **TAP-IN TEE DETAILS** **SCALE: NTS**	STANDARD DETAILS	P7

DIMENSIONS (INCH)				TEE BRANCH		
	NOMINAL BRANCH SIZE (DIA.)	4	6	8	12	16*
A	ACTUAL BRANCH DIAMETER (I.D.)	4.25	6.25	8.375	12.375	
B	LENGTH OF TEE BRANCH	6.00	6.00	6.25	6.25	
C	MIN. THICKNESS OF TEE NIPPLE	0.237	0.280	0.280	0.330	
D	DIAMETER OF MACHINED FLANGE	9.125	11.125	13.656	19.00	
E	FLANGED THICKNESS	0.94	1.00	1.125	1.25	
F	FLANGE OFFSET DIAMETER	4.724	6.81	8.935	13.035	
G	DEPTH OF FLANGE OFFSET	.375	0.375	0.375	0.375	
H	BOLT CIRCLE DIAMETER	7.50	9.50	11.75	17.00	
J	(AMOUNT) & DIA. OF BOLT HOLES	(8)0.750	(8)0.875	(8)0.875	(12)1.00	
K	THICKNESS OF REINF. SADDLE PLATE	0.250	0.250	0.250	0.375	
O	DEGREES BETWEEN BOLT CENTER	45°	45°	45°	30°	

* FOR 16" AND LARGER BRANCH THE CONTRACTOR SHALL SUBMIT 6 SETS OF SHOP DRAWINGS FOR APPROVAL BY THE WATER DEPARTMENT.

FABRICATION NOTES:

1. ALL TAP-IN TEE COMPONENTS SHALL BE MADE FROM NEW AND SOUND MATERIALS AS SPECIFIED.
2. STEEL PRODUCTS FOR COMPONENTS SHALL BE HOT ROLLED M-1020 OR BETTER.
3. WELDING ELECTRODES SHALL MEET ASTM A-223, AWS A-5.1 SPECIFICATIONS.
4. THE TOP TWO BOLT HOLES ON THE FLANGE SHALL BE EQUIDISTANT FROM THE PLUMB CENTER LINE.
5. THE BUTT END ON THE BRANCH AND THE ARCH ON THE REINFORCING SADDLE PLATE SHALL CONFORM TO THE O.D. OF THE STEEL SHEET CYLINDER SO THAT A TIGHT AND CLOSE FIT JOINT WILL BE ATTAINED ON THE STEEL SHEET CYLINDER. DIAMETER OF BRANCH HOLE ON THE SADDLE PLATE IS 0.50" LARGER THAN THE O.D. OF THE BRANCH.
6. THREE 0.375" THICK GUSSET PLATES SHALL BE PROVIDED AND INSTALLED IN THE FIELD.

INSTALLATION PROCEDURE

1. REMOVE SUFFICIENT EXTERIOR MORTAR COATING FROM CONCRETE CYLINDER PIPE TO CONTAIN REINFORCING SADDLE PLATE.
2. POSITION AND MARK OUT EXACT OUTLINE OF REINFORCING SADDLE PLATE ON EXPOSED STEEL SHEET CYLINDER.
3. TACK WELD CIRCUMFERENTIAL WIRE OR ROD REINFORCEMENT ONTO STEEL SHEET CYLINDER - 1" AWAY FROM PERIMETER OF SADDLE PLATE.
4. CUT AND BEND REINFORCING WIRES OR RODS AWAY FROM THE WORK AREA.
5. POSITION AND DRAW REINFORCED SADDLE PLATE TIGHTLY AGAINST THE STEEL SHEET CYLINDER BEFORE WELDING THE SADDLE PLATE ON THE CYLINDER, AS INDICATED BY "Y".
6. TEE BRANCH INSTALLATION:
   - A. POSITION THE PRESHAPED END OF THE TEE BRANCH ON THE STEEL SHEET CYLINDER THROUGH THE BRANCH HOLE ON THE SADDLE PLATE.
   - B. WELD THE BRANCH TO THE STEEL SHEET CYLINDER BEFORE JOINING AND TYING THE BRANCH TO THE SADDLE PLATE, AS INDICATED BY "Z" ON SECTION X-X.
   - C. FIT AND INSTALL THE GUSSET PLATES, AS ABOVE.
   - D. TEST WELDED JOINTS ON NEW INSTALLATION FOR LEAKS.
   - E. BEND AND REPLACE THE DISPLACED CIRCUMFERENTIAL WIRE OR ROD REINFORCEMENT OVER THE SADDLE PLATE AND TACK WELD THE WIRES OR RODS TO THE PLATE.
   - F. APPLY A HEAVY COAT OF CEMENT MORTAR ON EXPOSED METAL SURFACE, AS SHOWN BY DOTTED LINES ON SECTION X-X.

2002
REVISION

KAUAI
OAHU
MAUI

CONCRETE CYLINDER PIPE

TAP-IN TEE NOTES AND TABLES

SCALE: NTS

STANDARD DETAILS

P8

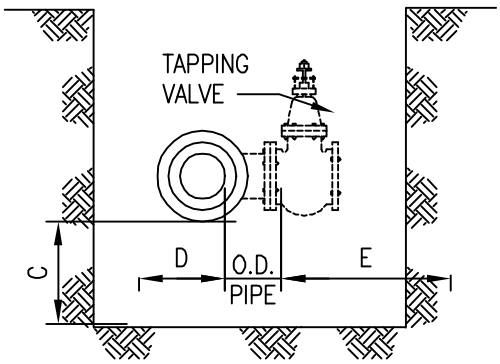

SECTION A–A

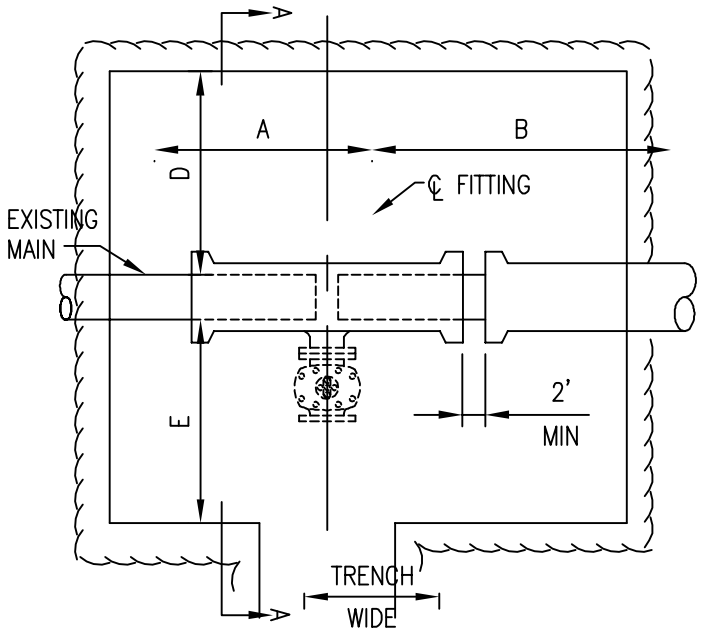

PLAN

TABLE "A"							
PIPE DIAMETER	MATERIAL	FITTING	A	B	C	D	E
4"–12"	AC	COUPLING	3'–0"	5'–0"	1'–0"	1'–6"	1'–6"
	CI & DI	SLEEVE OR BEND	3'–0"	5'–0"	1'–0"	1'–6"	1'–6"
	CI & DI	TAPPING TEE	3'–0"	5'–0"	1'–0"	1'–6"	5'–0"
	CI & DI	TEE	6'–6"	5'–0"	1'–0"	1'–6"	5'–0"
16"–20"	AC	COUPLING	3'–0"	5'–0"	1'–6"	2'–0"	2'–0"
	CC	BUTT STRAP	3'–6"	5'–6"	3'–0"	2'–0"	2'–0"
	CI & DI	SLEEVE OR BEND	3'–0"	5'–0"	1'–6"	2'–0"	2'–0"
	CI & DI	TAPPING TEE	3'–0"	5'–6"	1'–6"	1'–6"	6'–0"
	CI & DI	TEE	7'–0"	5'–6"	1'–6"	2'–0"	6'–0"
24"–42"	CC	BUTT STRAP	3'–6"	5'–6"	3'–0"	3'–0"	3'–0"
	CI & DI	SLEEVE OR BEND	3'–0"	5'–0"	1'–6"	3'–0"	3'–0"
	CI & DI	TAPPING TEE	3'–6"	6'–0"	1'–6"	1'–6"	6'–0"
	CI & DI	TEE	8'–6"	7'–0"	1'–6"	3'–0"	6'–0"

NOTES:

1. LIMIT OF PAYMENT FOR EXCAVATION SHALL BE AS SHOWN ON TABLE "A" ABOVE.
2. FOR BGGV, DIMENSIONS SHALL BE DETERMINED IN THE FIELD.
3. REACTION BLOCKS AS REQUIRED. NOT SHOWN FOR CLARITY.

2002
REVISION

KAUAI
OAHU

EXCAVATION PAYMENT
LIMITS AT CONNECTION
SCALE: NTS

STANDARD DETAILS

P9

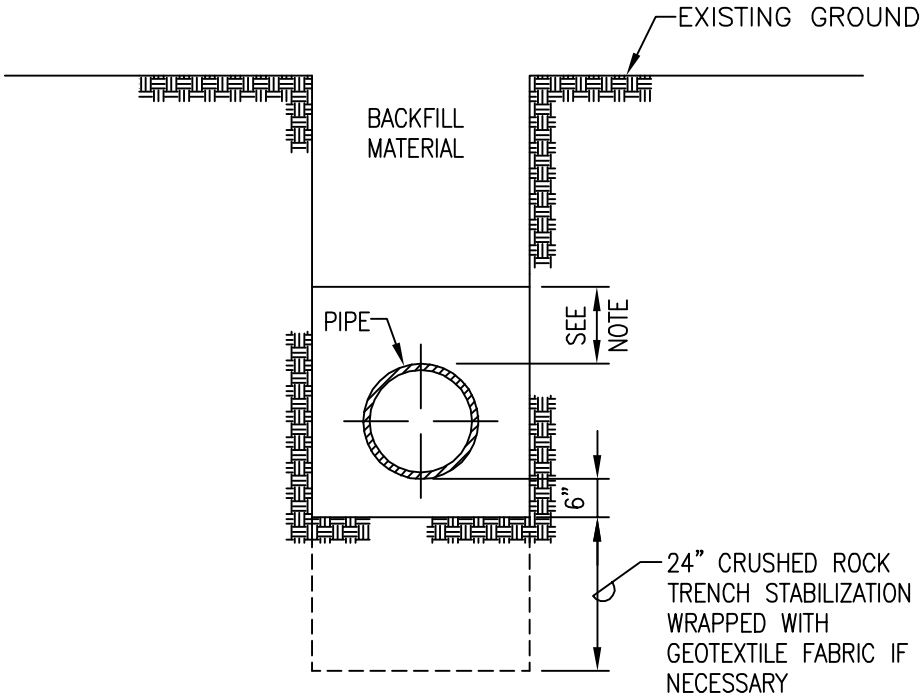

NOTE:

1. 12" OF CUSHION MATERIAL FOR PIPES 16" OR LARGER. 6" CUSHION MATERIAL FOR PIPES 12" OR SMALLER AT LOCATIONS WHERE INVERT IS ABOVE 4-FOOT ELEVATION.

2. 12" OF CUSHION MATERIAL FOR ALL PIPE SIZES AT LOCATIONS WHERE THE INVERT IS AT OR BELOW THE 4-FOOT ELEVATION.

			2002
			REVISION
OAHU MAUI	TRENCH BACKFILL SCALE: NTS	STANDARD DETAILS	P10

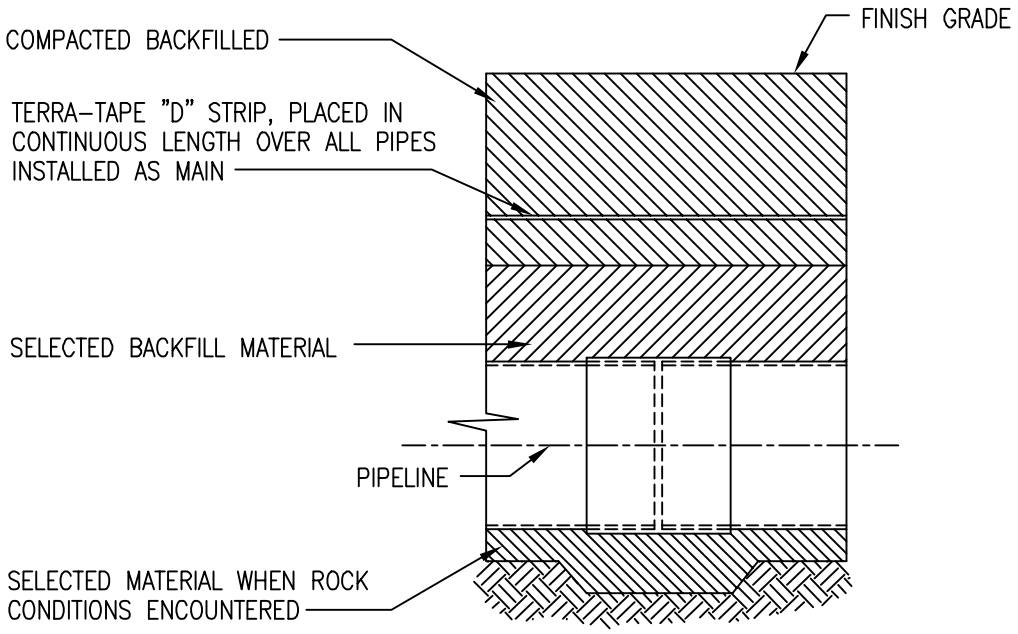

DETAIL AT JOINT

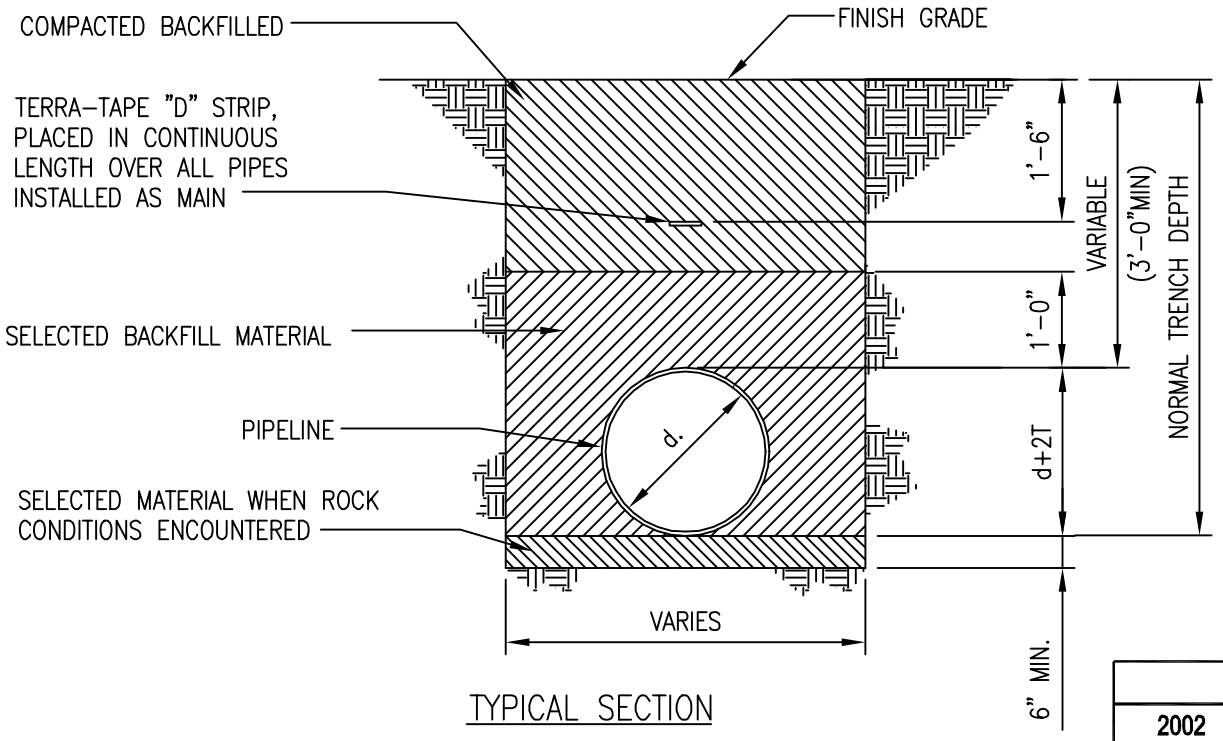

TYPICAL SECTION

			2002
			REVISION
KAUAI	**WATERLINE TRENCH DETAILS** MISCELLANEOUS DETAILS SCALE: NTS	STANDARD DETAILS	P11

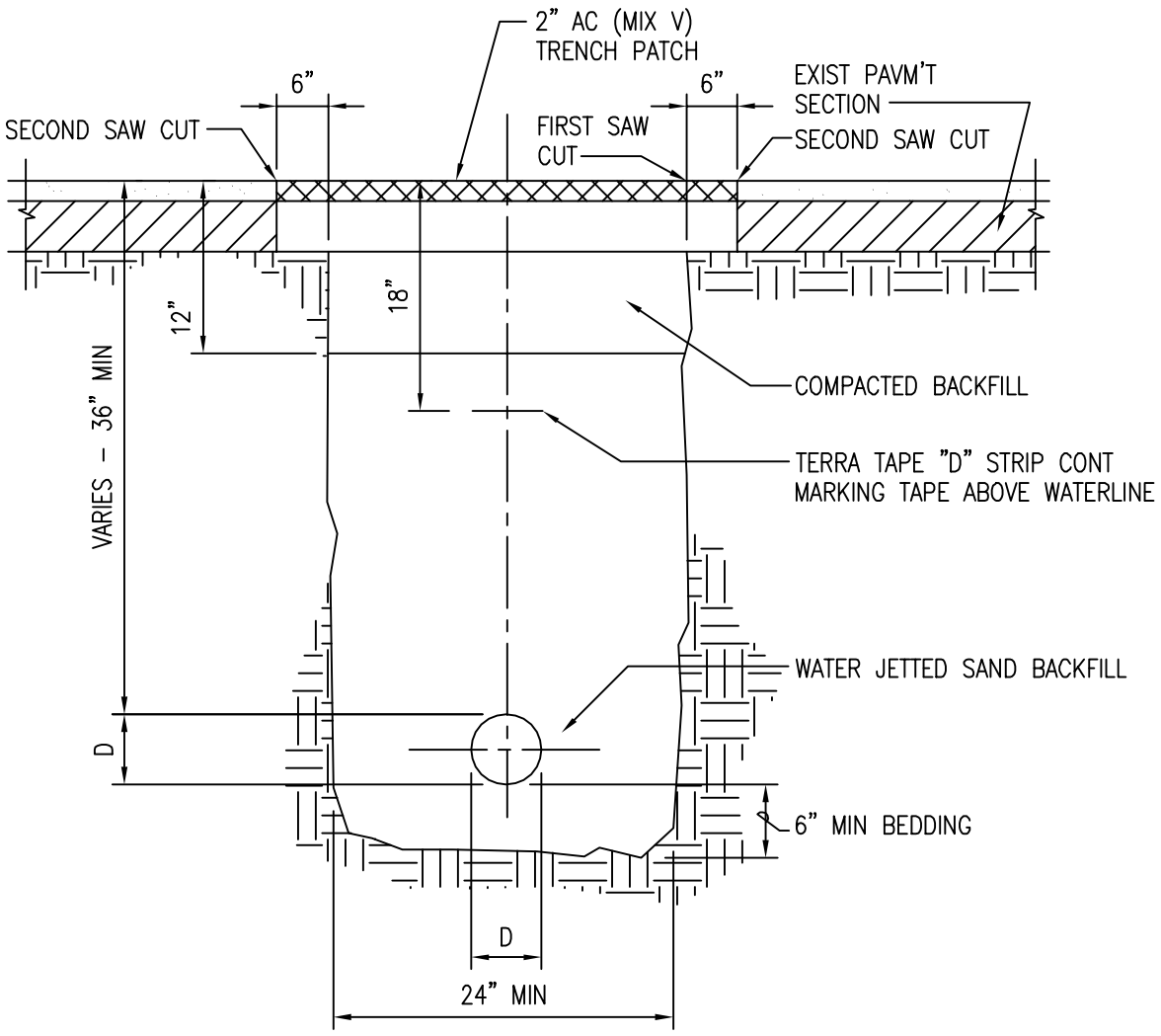

TYPICAL PVC WATERLINE TRENCH

NOTE FOR PVC WATER MAIN

1. A MIN OF 3 FEET OF COVER SHALL BE MAINTAINED AT ALL TIMES.
2. BACKFILL MATERIAL SHALL BE SAND ONLY; WATER JETTED TO WITHIN 12" OF FINISHED GRADE.
3. NO DIRECT TAPS SHALL BE PERMITTED. ALL TAPS SHALL BE WITH THE USE OF BRONZE, DOUBLE STRAP SERVICE SADDLES.
4. ALL OTHER CONDITIONS FOR PIPELINE INSTALLATIONS REMAIN AS SPECIFIED.
5. ONLY C.I. FITTINGS SHALL BE USED FOR ALL BENDS, REDUCERS, ETC. WITH PVC ENDS OR MJ ENDS.

			2002
			REVISION
KAUAI	TYP. PVC WATERLINE TRENCH PAVED AREA SCALE: NTS	STANDARD DETAILS	P12

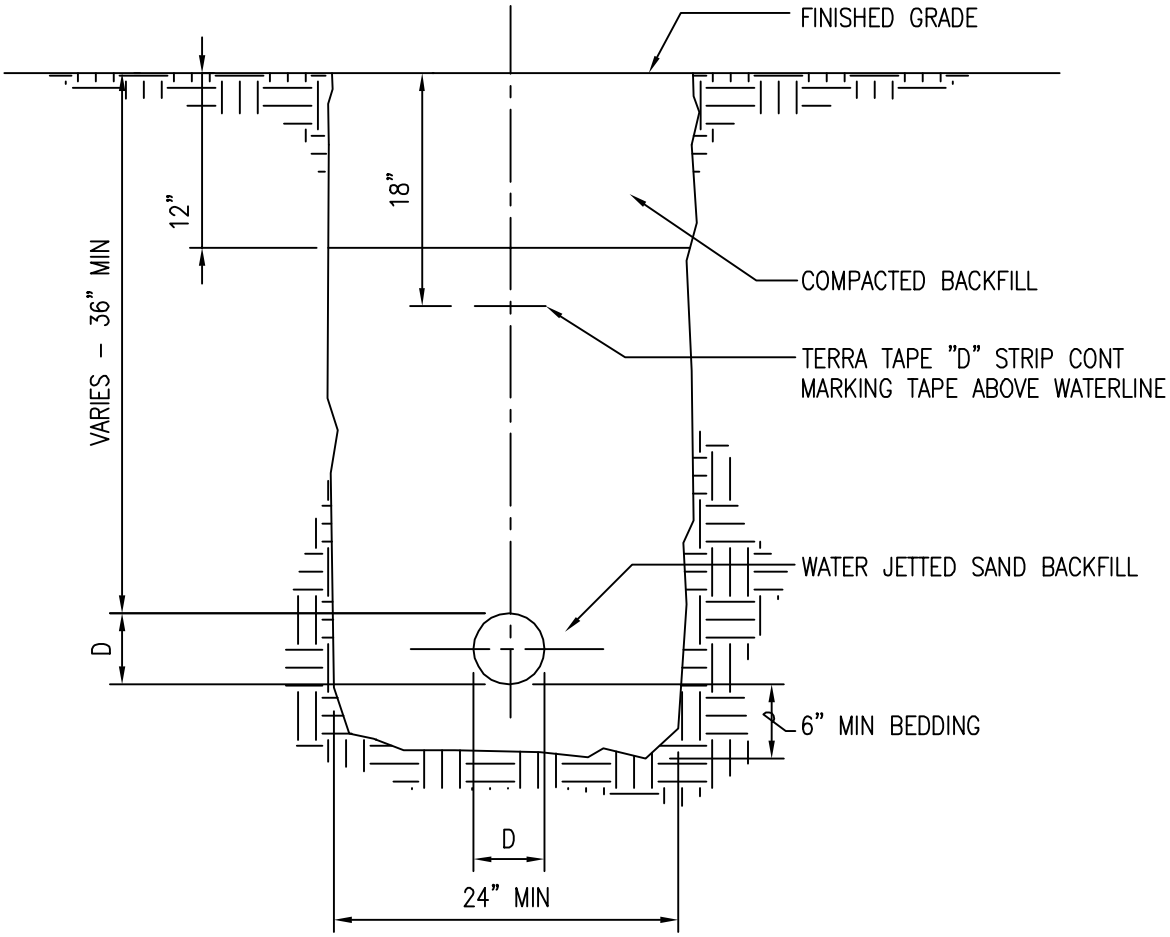

TYPICAL PVC WATERLINE TRENCH

NOTE FOR PVC WATER MAIN

1. A MIN OF 3 FEET OF COVER SHALL BE MAINTAINED AT ALL TIMES.
2. BACKFILL MATERIAL SHALL BE SAND ONLY; WATER JETTED TO WITHIN 12" OF FINISHED GRADE.
3. NO DIRECT TAPS SHALL BE PERMITTED. ALL TAPS SHALL BE WITH THE USE OF BRONZE, DOUBLE STRAP SERVICE SADDLES.
4. ALL OTHER CONDITIONS FOR PIPELINE INSTALLATIONS REMAIN AS SPECIFIED.
5. ONLY C.I. FITTINGS SHALL BE USED FOR ALL BENDS, REDUCERS, ETC. WITH PVC ENDS OR MJ ENDS.

			2002
			REVISION
KAUAI	TYP. PVC WATERLINE TRENCH NON-PAVED AREA SCALE: NTS	STANDARD DETAILS	P13

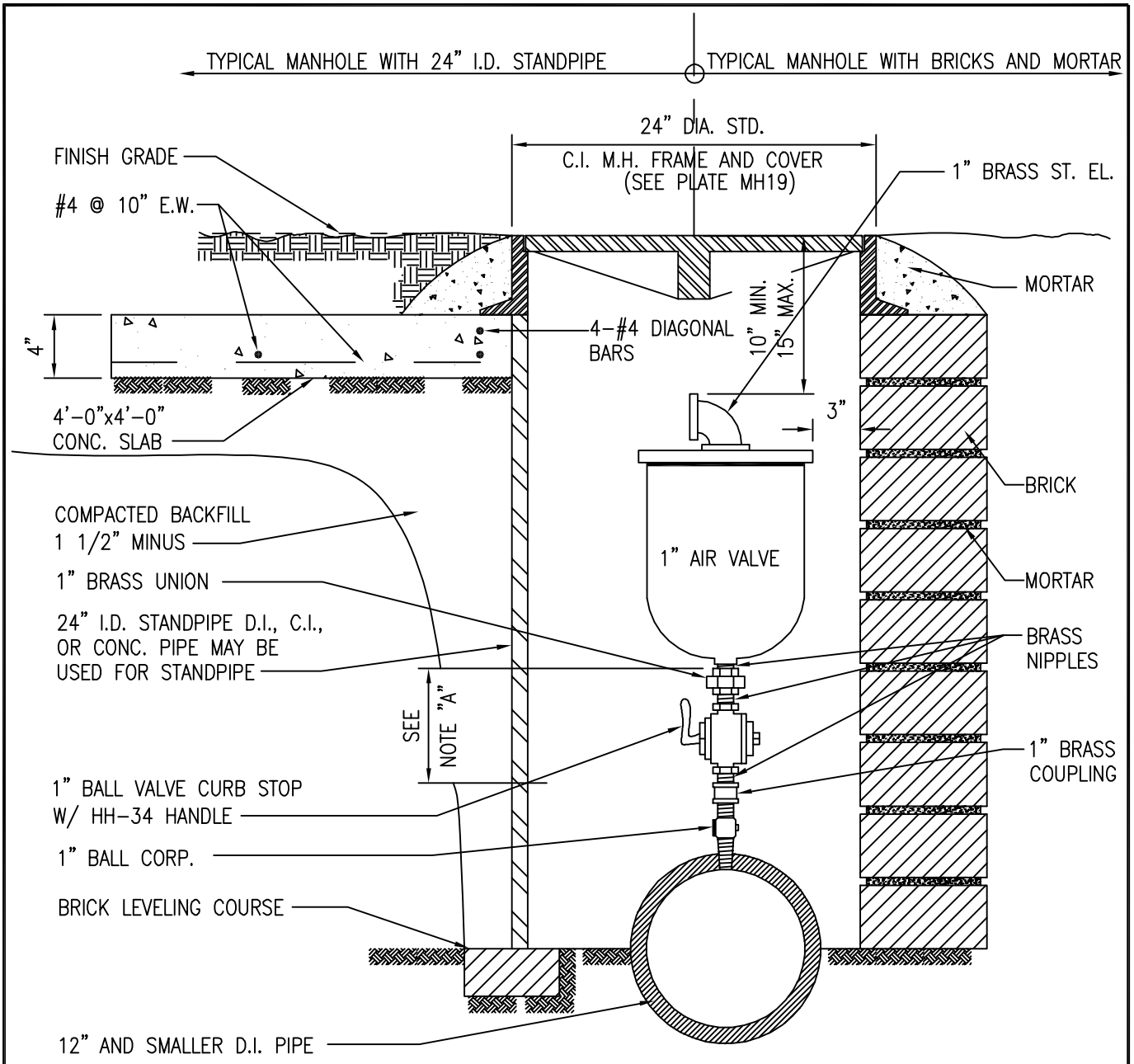

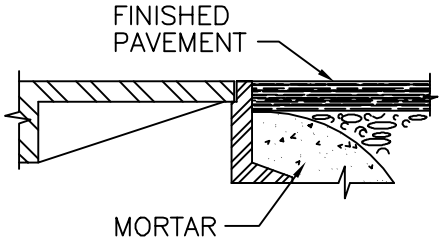

MANHOLE INSTALLATION
WITHIN PAVED AREAS

NOTES:

A. ELIMINATE CURB STOP AND COUPLING WHERE PIPE BURY (TOP OF PIPE TO FINISH GRADE) IS LESS THAN 30 INCHES. CONNECT UNION TO BALL CORP. AND ADJUST OVERALL HEIGHT ACCORDINGLY W/ BRASS NIPPLE (CUT TO FIT).
B. FOR INSTALLATIONS WITHIN PAVED AREAS, SEE DETAIL AT RIGHT.

			2002
			REVISION
HAWAII	1" AIR VALVE UNIT DETAIL SCALE: NTS	STANDARD DETAILS	V1

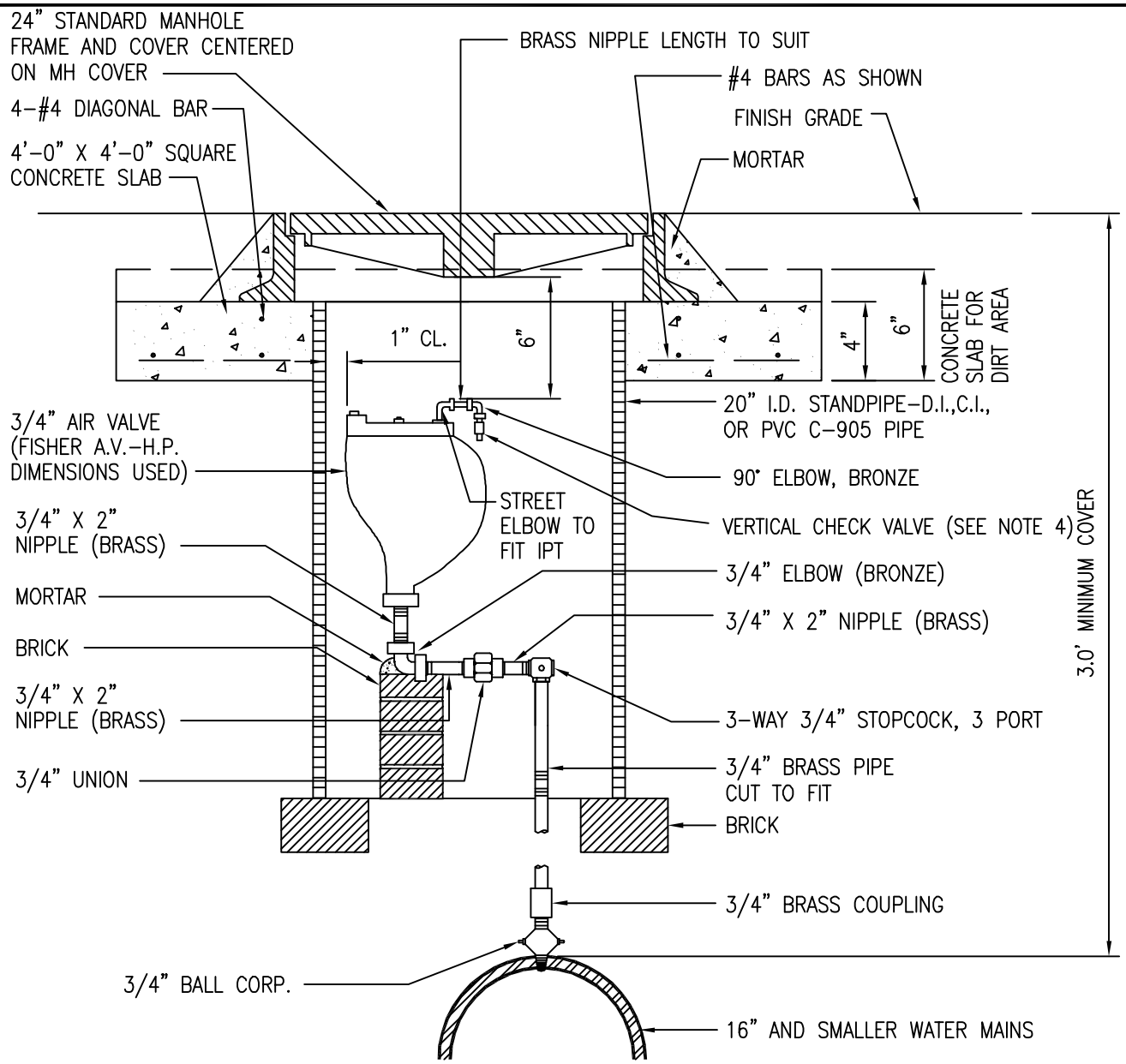

STANDARD CONNECTION FOR 3/4" AIR RELIEF VALVE AT VALVE BOX

NOT TO SCALE

NOTE:

1. SEE V4 FOR INSTALLATION IN MANHOLES.
2. CONCRETE SHALL BE DWS 2500. REINFORCING STEEL SHALL BE GRADE 60.
3. DESIGN IS BASED ON: HS-20 LOADING; 5 FEET SURCHARGE; 60 PCF/FT AT REST PRESSURE; AND 2 FEET OF WATER ABOVE BOTTOM OF STANDPIPE PER AASHTO LRFD BRIDGE DESIGN SPECIFICATIONS (1998)
4. VERTICAL CHECK VALVE IS REQUIRED WHEN AIR VALVE IS IMMERSED IN WATER.
5. PROVIDE S.S. FABRIC SCREEN COVER FOR OUTLET PIPE.

			2002
			REVISION
OAHU	AIR RELIEF VALVE BOX FOR 3/4" AIR RELIEF VALVE SCALE: NTS	STANDARD DETAILS	V2

NOTE:

ALL CASTINGS SHALL BE MADE ACCURATELY TO THE DIMENSIONS SHOWN. SEAT ANC COVER SHALL BE MACHINED, NOT GROUND TO SECURE FLAT AND TRUE SURFACES. THE COVER SHALL NOT RATTLE IN ANY POSITION.

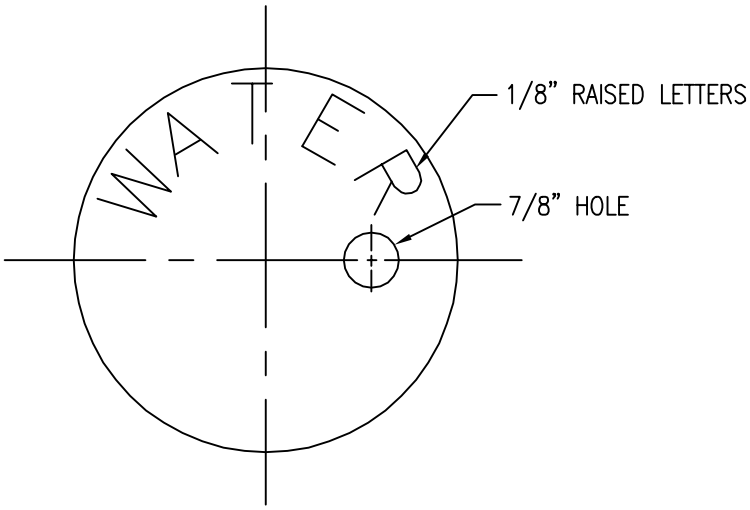

PLAN OF COVER

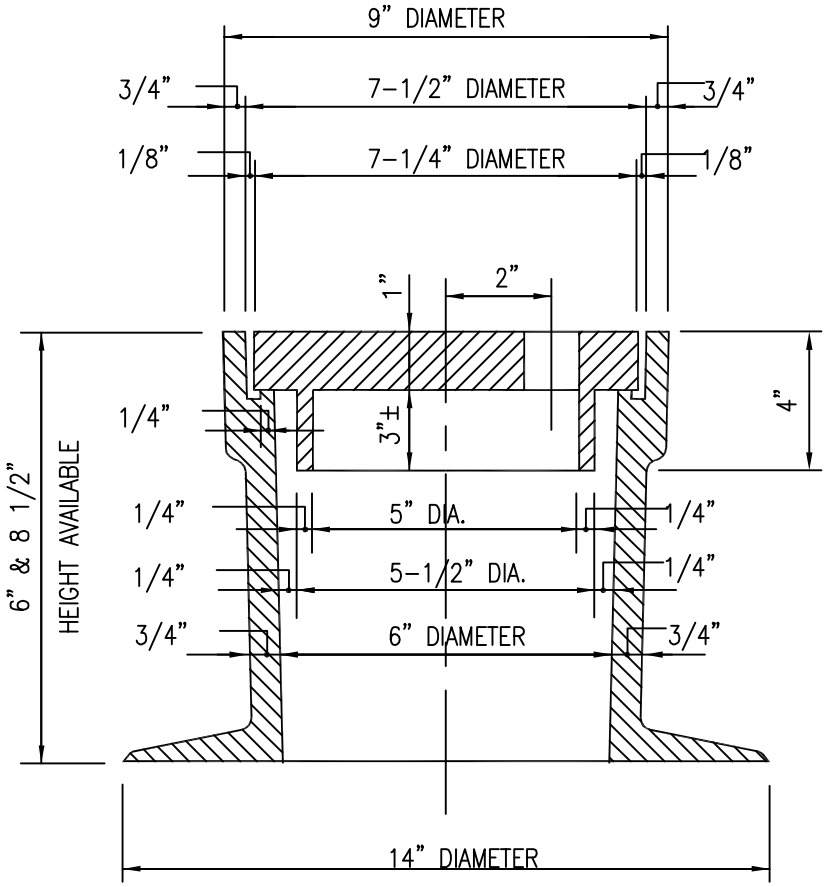

SECTION

			2002
			REVISION
KAUAI OAHU MAUI	**VALVE FRAME & COVER** CAST IRON, 6" SIZE SCALE: NTS	STANDARD DETAILS	V3

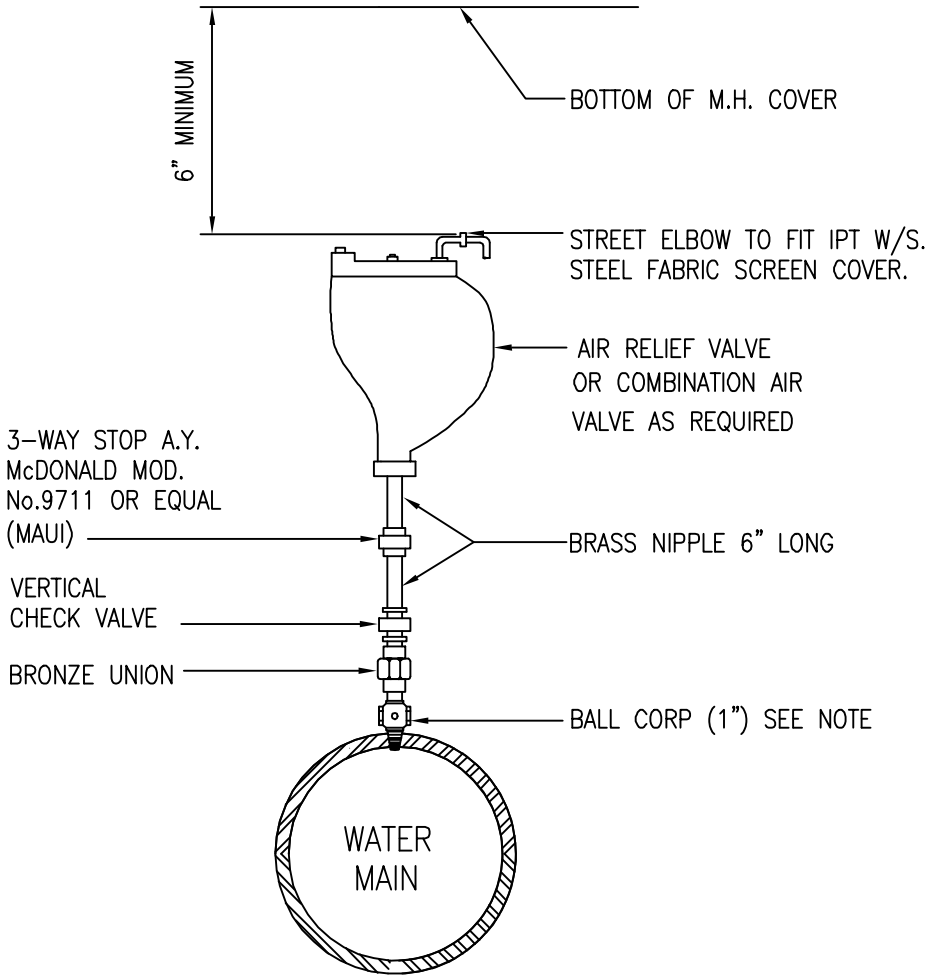

STANDARD CONNECTION FOR AIR RELIEF VALVE

NOTE:

1. FOR 2" AIR RELIEF VALVE, SIZE OF BALL CORP., UNION, VERTICAL CHECK VALVE AND NIPPLE SHALL BE 2".
2. PROVIDE TYPE "F" MANHOLE V23 FOR BURIED INSTALLATION. (MAUI ONLY)
3. INSTALL PRECAST TYPE B OR TYPE C MANHOLE FOR VALVES (OAHU ONLY)
4. FOR COMBINATION AIR VALVE, IMMERSED INSTALLATION NOT PERMITTED.

			2002 REVISION
OAHU MAUI	AIR RELIEF VALVE CONNECTION IN MANHOLE SCALE: NTS	STANDARD DETAILS	V4

LIST OF MATERIALS			
ITEM	NO. REQ. FOR 1 ARV	NO. REQ. FOR 2 ARVS	DESCRIPTION
1	1	1	2" BALL CORPORATION
2	2	3	2" UNION, BRONZE
3	2	4	2" 90° ELBOW, BRONZE
4	2	5	2" BRASS PIPE, CUT TO FIT
5	3	3	2" STREET ELBOW
6	1	2	2" BALL STOP
7	2	4	BRICK SUPPORT
8	1	2	2" DIA. x 4" NIPPLE, BRASS
9	1	2	2" AIR RELIEF VALVE
10	4	8	2" DIA. x 4" NIPPLE, BRASS
11	1	2	STREET ELBOW TO FIT IPT **
12	0	1	2" x 2" TEE, BRASS
*13	1	2	3-WAY STOP

* FOR MAUI ONLY

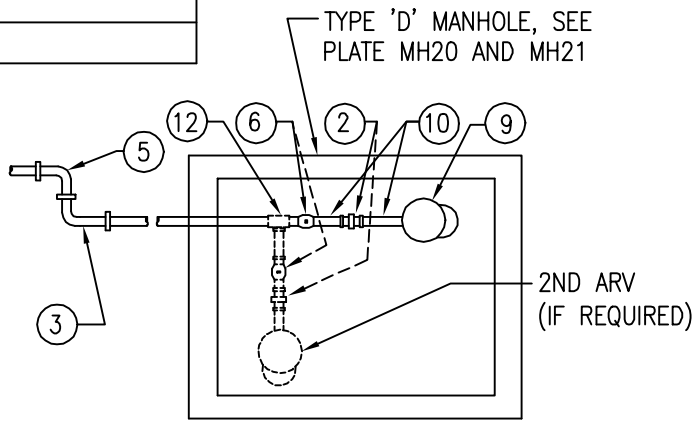

PLAN

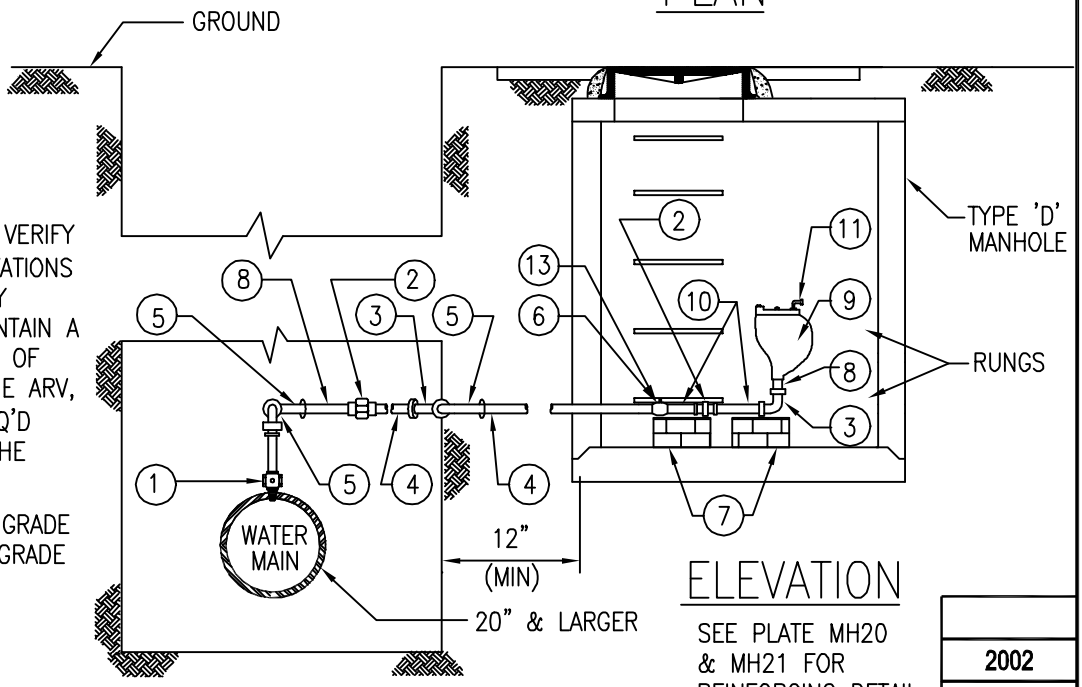

ELEVATION

SEE PLATE MH20 & MH21 FOR REINFORCING DETAIL

NOTE:

1. DESIGN ENGINEER TO VERIFY ALL DIMENSIONS/ELEVATIONS AND MAKE NECESSARY ADJUSTMENTS TO MAINTAIN A 0 TO POSITIVE SLOPE OF LATERAL GOING TO THE ARV, AND PROVIDE ALL REQ'D CLEARANCES INSIDE THE MANHOLE.
2. INSTALL MANHOLE AT GRADE HIGHER THAN FINISH GRADE ALONG MAIN.

KAUAI OAHU MAUI	**OFFSET AIR RELIEF VALVE** FOR 20" OR LARGER MAINS SCALE: NTS	STANDARD DETAILS	2002 REVISION V5

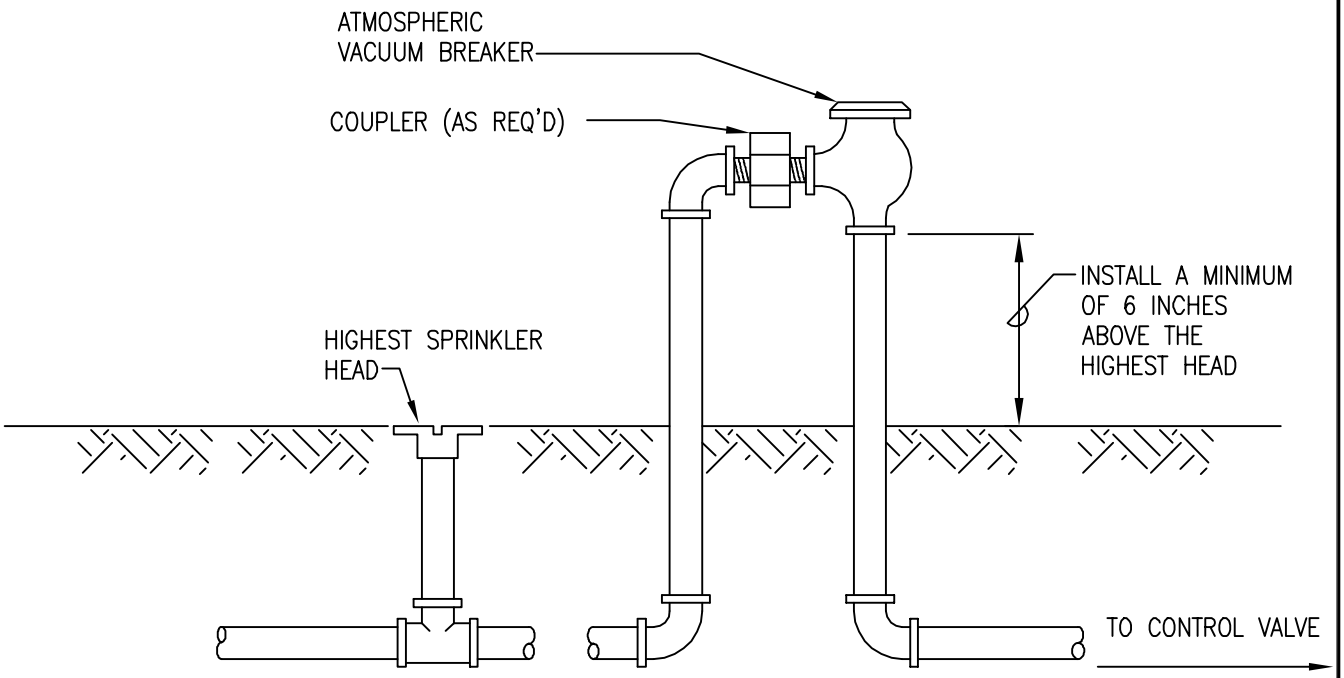

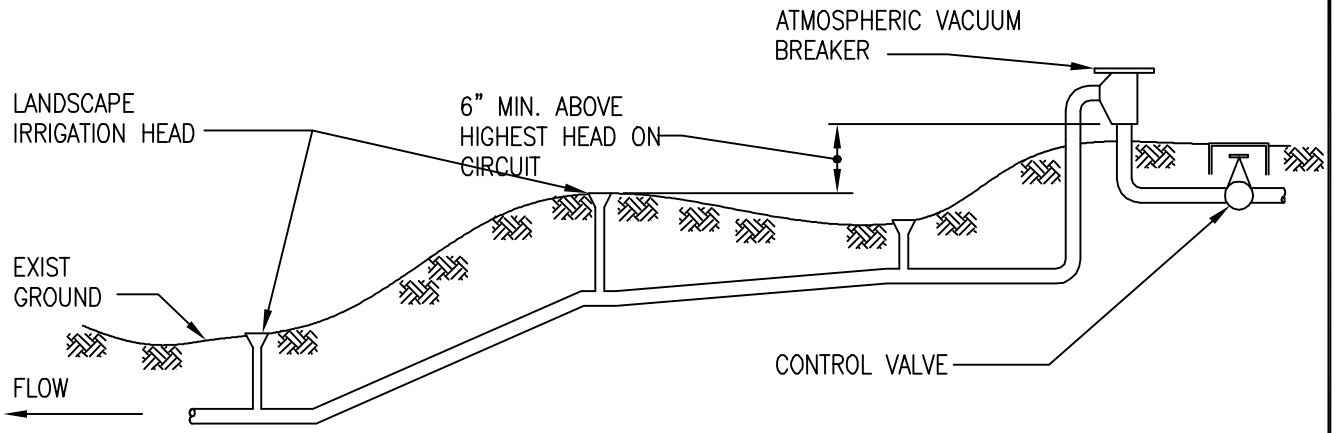

NOTE:

1. AN ATMOSPHERIC VACUUM BREAKER SHALL BE INSTALLED ON THE DISCHARGE SIDE OF THE LAST CIRCUIT CONTROL VALVE.
2. NO CHEMICAL ADDITION, EITHER BY INJECTION OR SIPHONING, WILL BE PERMITTED.
3. FOR USE ONLY ON THOSE CIRCUITS, WITH UNDERGROUND SPRAY, SHRUBBERY SPRAY, BUBBLE HEADS, OR OTHER SIMILARLY CONSTRUCTED IRRIGATION HEADS.
4. NOT FOR USE ON CIRCUITS WITH QUICK COUPLING VALVES OR SUBSURFACE IRRIGATION SYSTEMS.

	2002
	REVISION

OAHU MAUI	**ATMOSPHERIC VACUUM BREAKER** **LANDSCAPE IRRIGATION DETAIL** SCALE: NTS	STANDARD DETAILS	V6

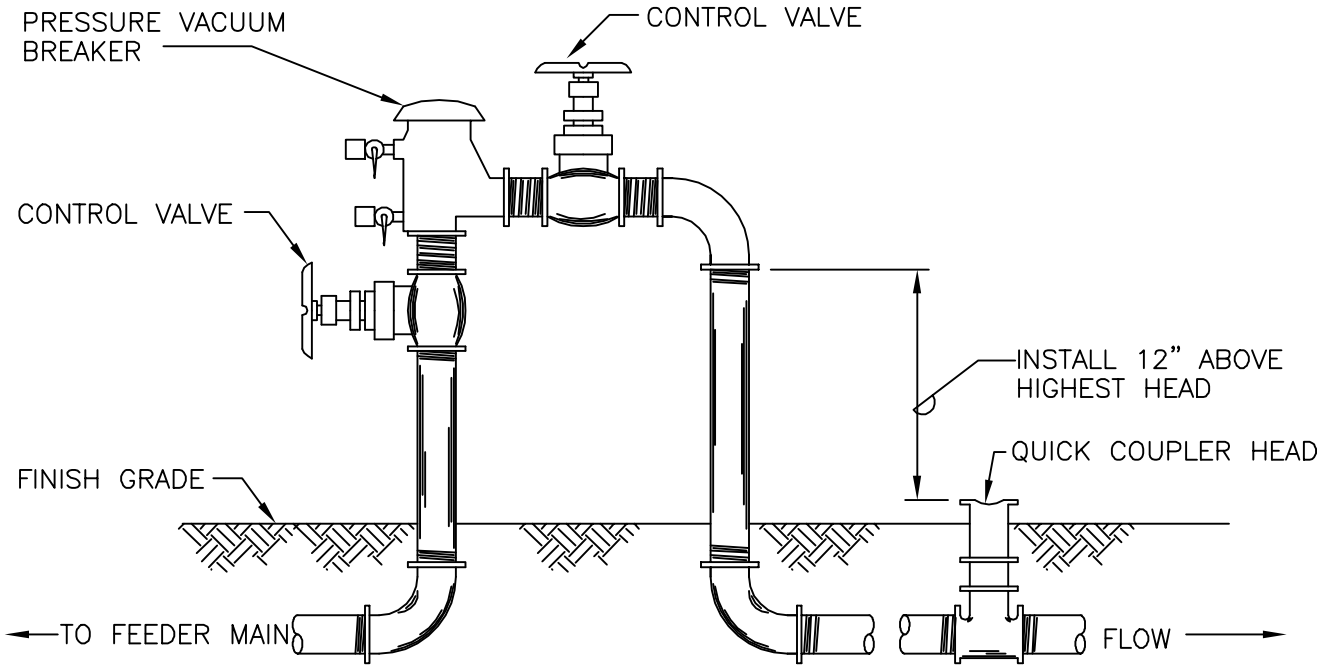

NOTES:

1. PRESSURE VACUUM BREAKER SHALL BE INSTALLED AT THE BEGINNING OF EACH CIRCUIT.
2. INJECTION OR SIPHONING OF CHEMICALS AND OTHER TOXIC OR OBJECTIONABLE SUBSTANCES INTO THE IRRIGATION SYSTEM WILL NOT BE PERMITTED.
3. FOR USE ON CIRCUITS WITH QUICK COUPLING VALVES, SUBSURFACE IRRIGATION SYSTEMS, OR SWIMMING POOLS.

			2002
			REVISION
OAHU MAUI	PRESSURE VACUUM BREAKER LANDSCAPE IRRIGATION SCALE: NTS	STANDARD DETAILS	V7

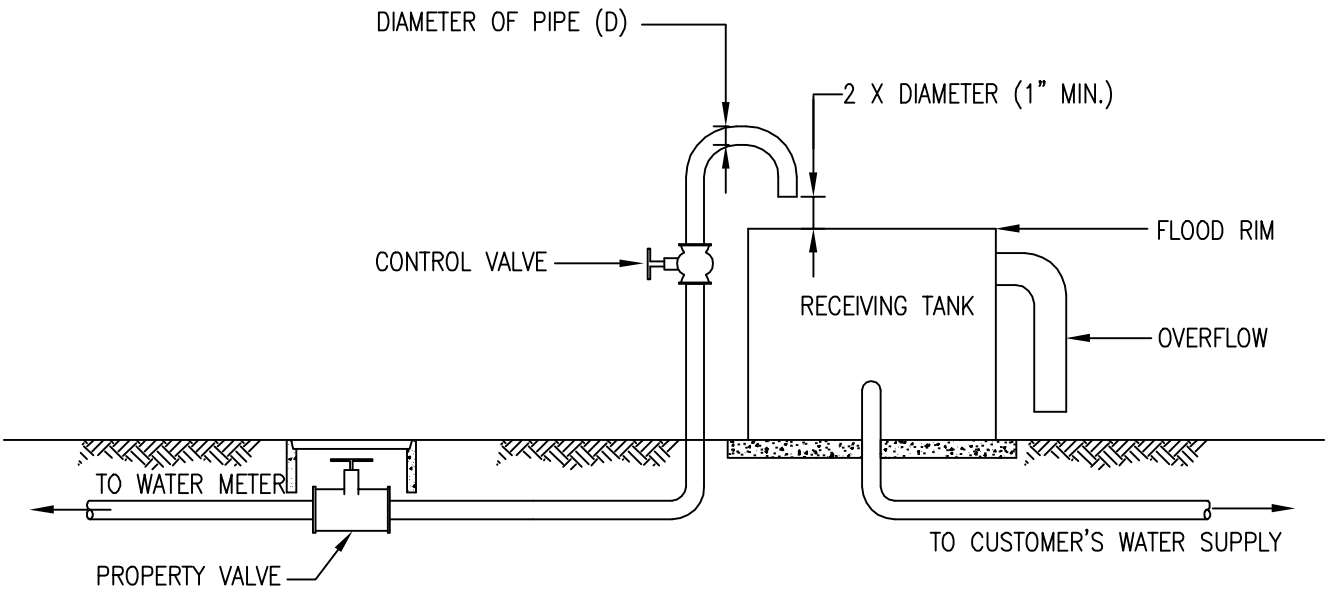

NOTE:

1. MAY BE USED AS AN ALTERNATIVE FOR THE REDUCED PRESSURE PRINCIPLE BACKFLOW PREVENTION DEVICE.
2. NO CONNECTIONS OR TEES BETWEEN METER AND TANK IS ALLOWED.
3. THE AIR GAP SHALL BE LOCATED ON PRIVATE PROPERTY AS CLOSE TO THE METER AS PHYSICALLY POSSIBLE

			2002
			REVISION
KAUAI OAHU MAUI HAWAII	AIR GAP TYPICAL DETAIL SCALE: NTS	STANDARD DETAILS	V8

SIZE (INCHES)	H (INCHES)
3/4 TO 1-1/2	18
2 TO 3	24
4 TO 6	30
8 TO 10	36

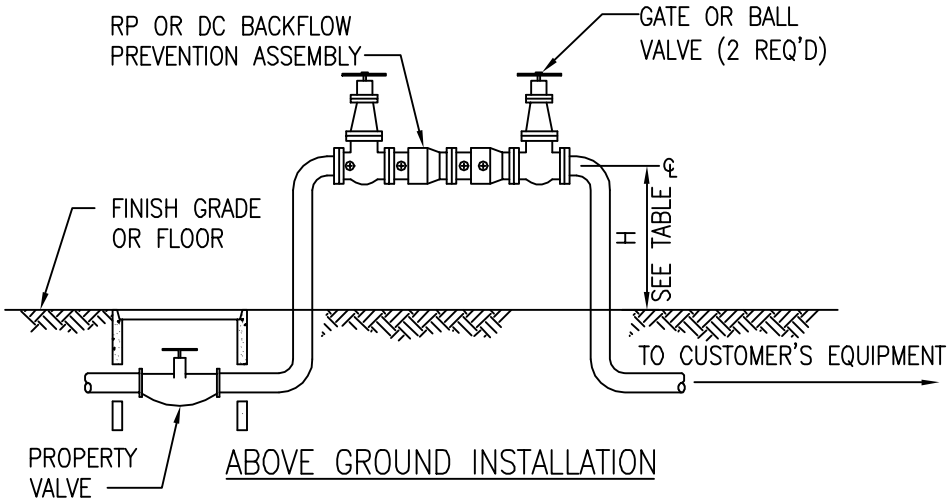

ABOVE GROUND INSTALLATION

NOTES:

1. ANY CONNECTIONS OR TEES BETWEEN METER AND BACKFLOW PREVENTION ASSEMBLY MUST HAVE WRITTEN APPROVAL BY THE MANAGER.
2. A RP OR DC BACKFLOW PREVENTION ASSEMBLY SHALL BE INSTALLED WHENEVER THE MANAGER DEEMS NECESSARY TO PREVENT POTENTIAL CONTAMINATION TO THE PUBLIC WATER SYSTEM. THE TYPE OF BACKFLOW PREVENTION ASSEMBLY SHALL BE DETERMINED BY THE MANAGER.
3. AT NO TIME SHALL THE BOTTOM OF THE BACKFLOW PREVENTION ASSEMBLY BE LESS THAN 12" ABOVE GROUND, FLOOR, OR FLOOD LEVEL NOR MORE THAN 48" ABOVE AFOREMENTIONED GRADES.
4. THE BACKFLOW PREVENTION ASSEMBLY SHALL BE INSTALLED AFTER THE WATER METER PRIOR TO ANY TEES AND BRANCHES.
5. WHENEVER BACKFLOW PREVENTION ASSEMBLY IS LOCATED 5' OR MORE FROM THE WATER METER, INSTALL CONCRETE JACKET BETWEEN WATER METER AND BACKFLOW PREVENTION ASSEMBLY TO AVOID POTENTIAL CROSS CONNECTION.
6. THE BACKFLOW PREVENTION ASSEMBLY SHALL BE INSTALLED PRIOR TO ISSUANCE OF WATER METER OR ACTIVATION OF WATER SERVICE.
7. REFER TO DIVISION 100, SECTION 107.1 FOR ADDITIONAL REQUIREMENTS AND TYPE OF BACKFLOW PREVENTER NEEDED.

			2002
			REVISION
KAUAI OAHU MAUI HAWAII	**BACKFLOW PREVENTER** TYPICAL INSTALLATION SCALE: NTS	STANDARD DETAILS	V9

ITEM	MATERIALS LIST
A	TYPE "X" METER BOX W/ CAST IRON COVER
B	1" PRESSURE AIR RELIEF VALVE
C	1" COPPER (TYPE "K", SOFT)
D	1" COPPER MALE ADAPTER
E	ANGLE BALL VALVE (FORD BAII-344W OR APPROVED EQUAL)
F	2" X 4" X 8" BRICK SADDLE
G	PACK JOINT COUPLING (FORD C14-44 OR APPROVED EQUAL)
H	1" CC X 1" MPT BALL CORPORATION
J	BRONZE SERVICE SADDLE W/ 1" CC TAP FOR USE ON C-900 PVC PIPE AND DUCTILE IRON PIPE OR PVC TEE W/ 1" PVC BUSING FOR USE ON 3" AND 4" PVC PIPE. SMITH-BLAIR TYPE 342 PLASTIC SERVICE SADDLE W/ 1" CC TAP FOR 3" AND 4" PVC PIPE.
K	ELBOWS AND SCREEN

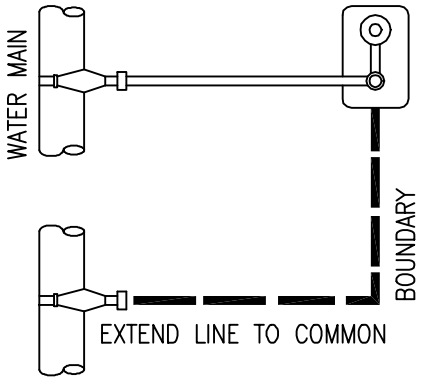

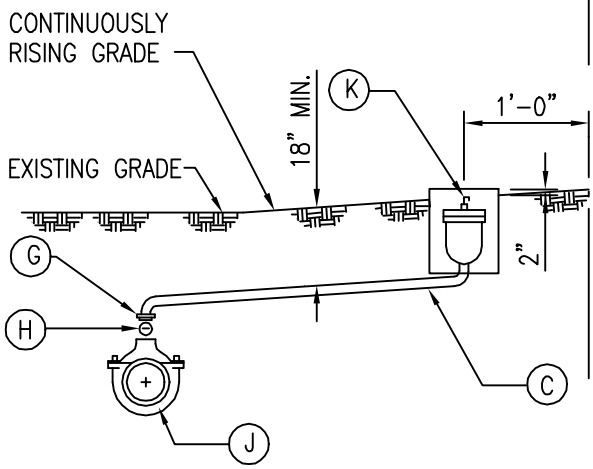

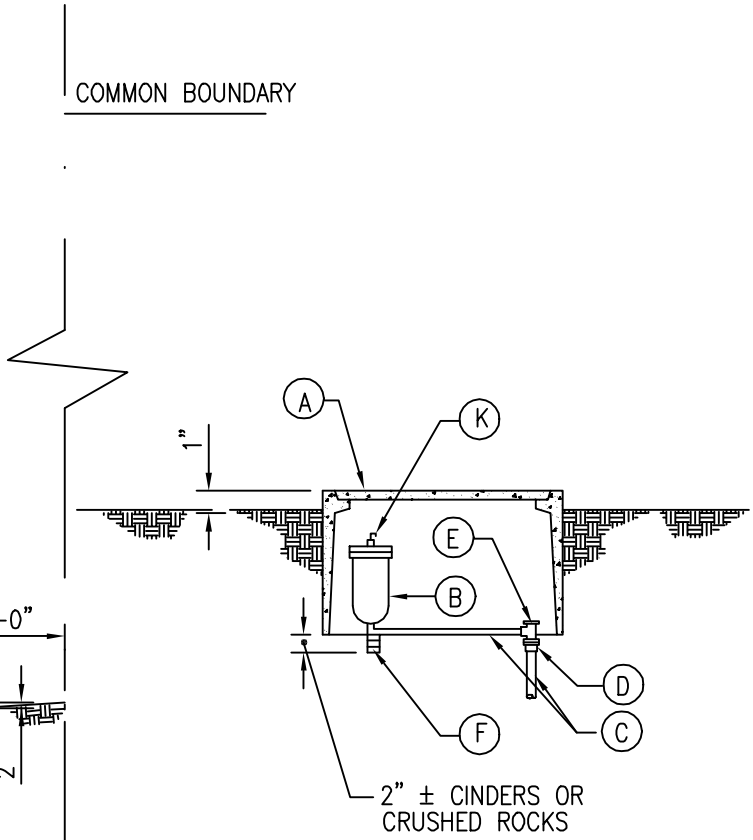

			2002
			REVISION
KAUAI	AUTOMATIC PRESSURE RELIEF VALVE SCALE: NTS	STANDARD DETAILS	V10

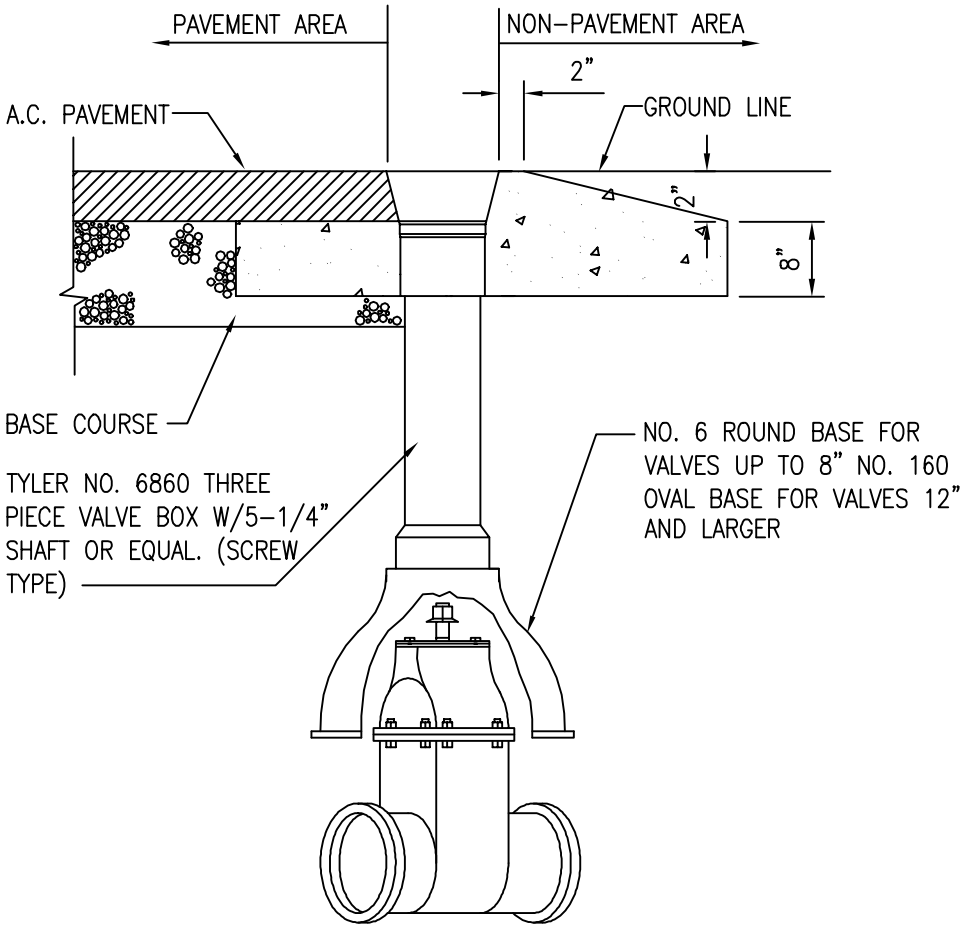

PROFILE

FOR GATE VALVE, BEVEL GEARED GATE VALVE AND BUTTERFLY VALVES

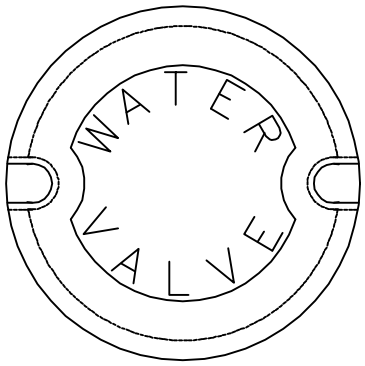

COVER

GENERAL NOTES:

1. PAVEMENT AREA: 2'-0" DIA. OR 2'-0" X 2'-0" SQUARE X 4" THICK CONC. SETTLEMENT SLAB.
2. NON-PAVEMENT AREA: 3'-0" DIA. OR 3'-0" X 3'-0" SQUARE X4" THICK CONC. SETTLEMENT SLAB.
3. COVER TO BE DROP LID COVER.

			2002
			REVISION
KAUAI	CAST IRON VALVE BOX DETAILS SCALE: NTS	STANDARD DETAILS	V11

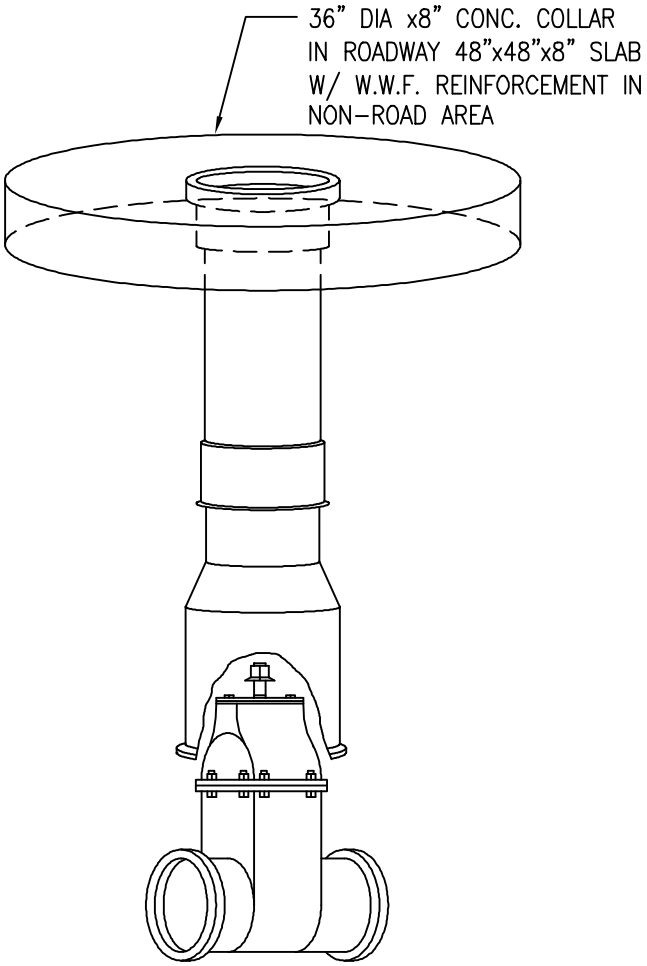

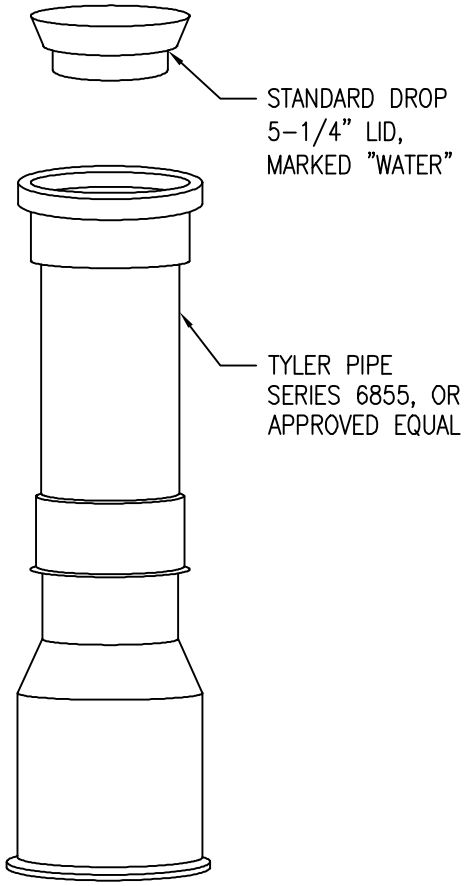

TWO-PIECE
VALVE BOX,
HEIGHT TO SUIT

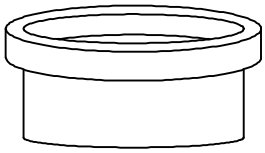

1 1/2" / 2 1/4"
VALVE BOX RISER

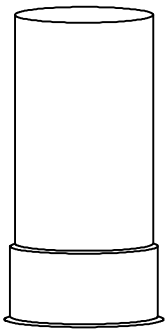

EXTENSION PIECE
60-A

NOTES:

1. VALVE BOX ASSEMBLY TO BE CAST IRON.
2. MODEL NUMBERS REFER TO TYLER PIPE CATALOG.
3. MAXIMUM 4' DEPTH TO VALVE OPERATOR NUT.

	2002
	REVISION

MAUI	6" SLIDING VALVE BOX ASSEMBLY SCALE: NTS	STANDARD DETAILS	V12

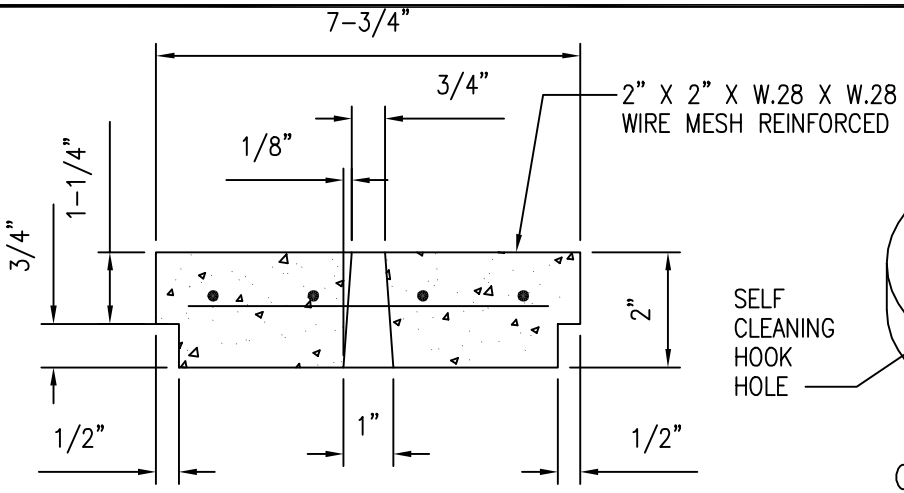

SECTION OF COVER

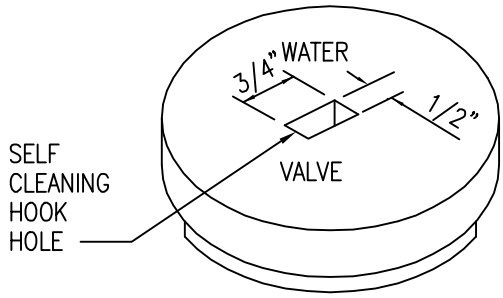

CONCRETE COVER

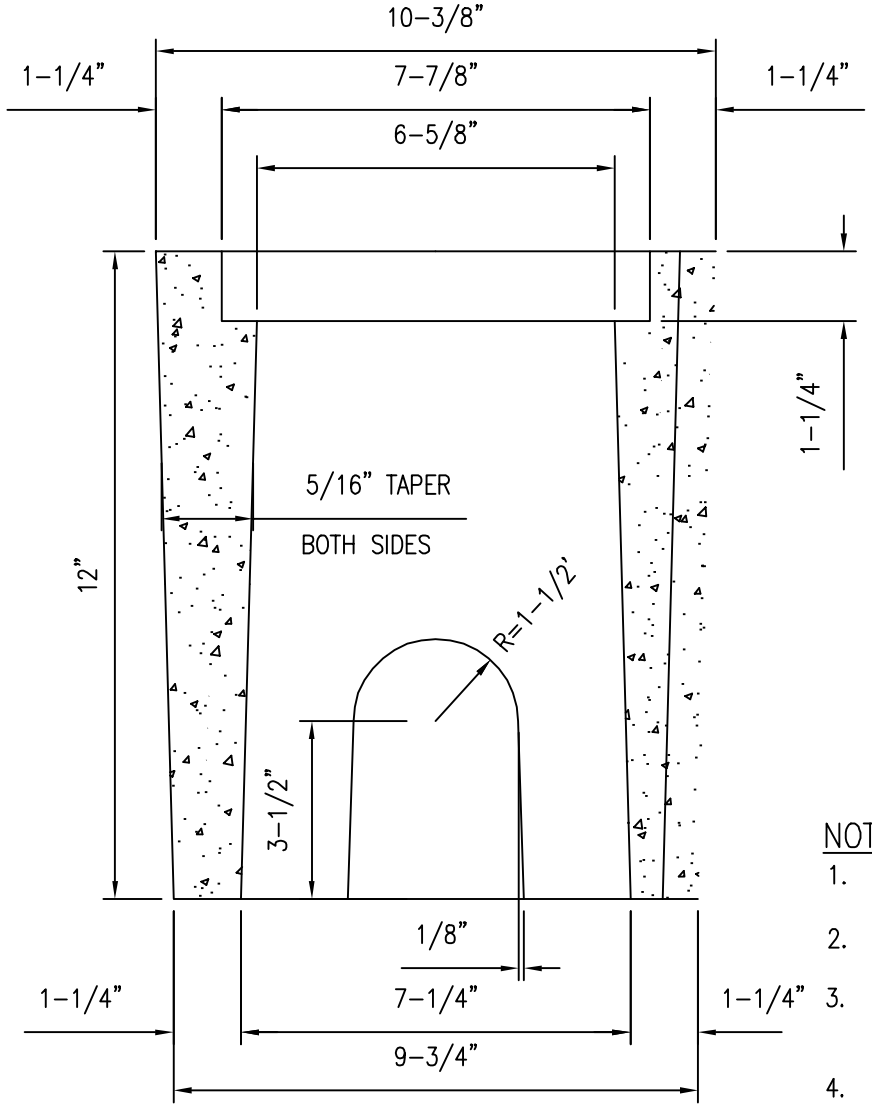

SECTION OF BOX

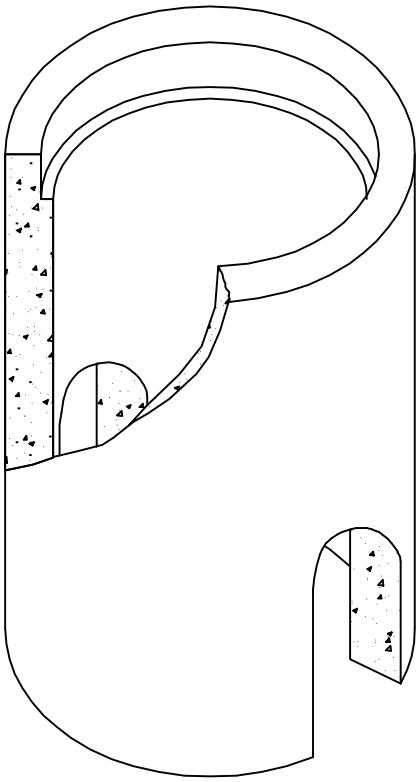

CONCRETE BOX

NOTE:

1. ACCOMMODATES 1" & 1-1/2" VALVES.
2. FOR 2" & 2-1/2" VALVES, USE TYPE "B" METER BOX.
3. FOR OAHU AND HAWAII, FIBER REINFORCED CONCRETE IS ALLOWED.
4. FOR VALVES INSTALLED IN ROADWAYS, INSTALL VALVE BOXES, SEE DETAIL V14 (FOR OAHU)

			2002
			REVISION
KAUAI OAHU HAWAII	TYPE "A" VALVE BOX SCALE: NTS	STANDARD DETAILS	V13

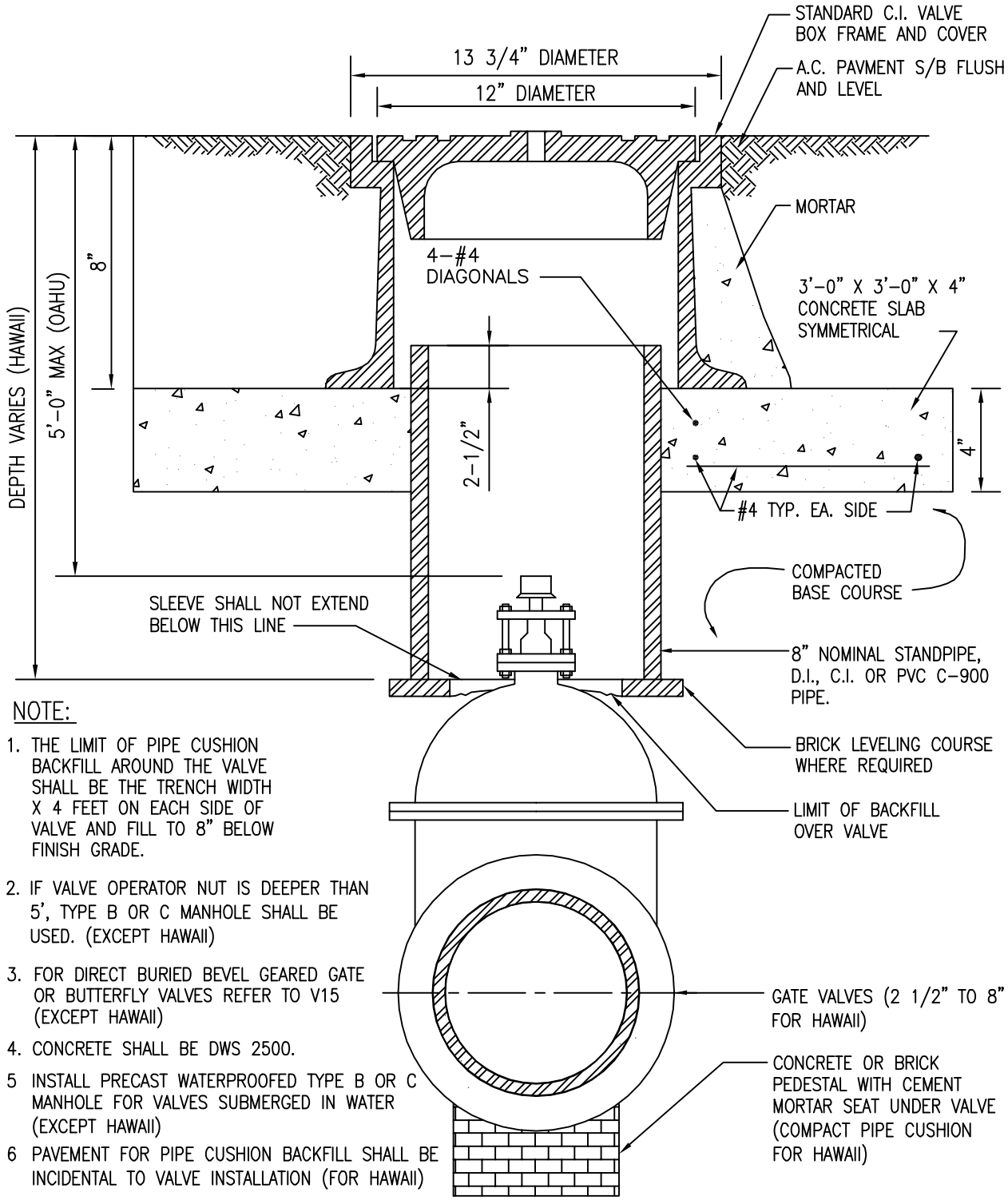

NOTE:

1. THE LIMIT OF PIPE CUSHION BACKFILL AROUND THE VALVE SHALL BE THE TRENCH WIDTH X 4 FEET ON EACH SIDE OF VALVE AND FILL TO 8" BELOW FINISH GRADE.
2. IF VALVE OPERATOR NUT IS DEEPER THAN 5', TYPE B OR C MANHOLE SHALL BE USED. (EXCEPT HAWAII)
3. FOR DIRECT BURIED BEVEL GEARED GATE OR BUTTERFLY VALVES REFER TO V15 (EXCEPT HAWAII)
4. CONCRETE SHALL BE DWS 2500.
5. INSTALL PRECAST WATERPROOFED TYPE B OR C MANHOLE FOR VALVES SUBMERGED IN WATER (EXCEPT HAWAII)
6. PAVEMENT FOR PIPE CUSHION BACKFILL SHALL BE INCIDENTAL TO VALVE INSTALLATION (FOR HAWAII)

			2002
			REVISION
OAHU HAWAII	12" VALVE BOX INSTALLATION FOR GATE VALVE SCALE: NTS	STANDARD DETAILS	V14

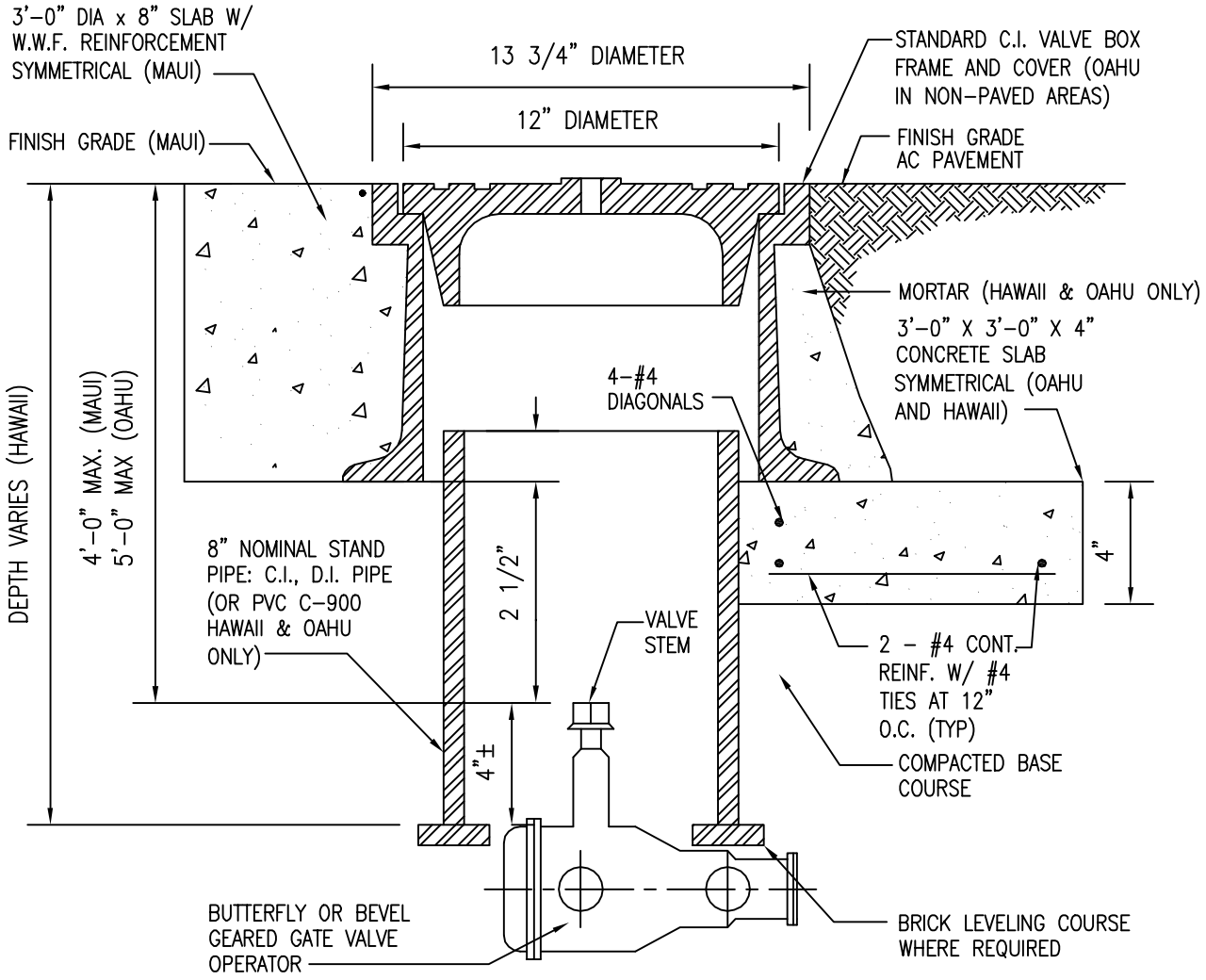

NOTE:

1. THE LIMIT OF PIPE CUSHION BACKFILL AROUND THE VALVE SHALL BE THE TRENCH WIDTH X 4 FEET ON EACH SIDE OF VALVE AND FILL TO 8" BELOW FINISH GRADE.
2. CONCRETE SHALL BE DWS 2500.
3. TWO VALVE BOXES REQUIRED PER BEVEL GEARED GATE VALVE WITH BY-PASS VALVE. APPLICABLE FOR DIRECT-BURIED BGGVS IN PAVED ROADWAYS AS APPROVED BY MANAGER. (OAHU ONLY)

			2002
			REVISION
OAHU MAUI HAWAII	**12" VALVE BOX INSTALLATION** FOR VALVE OPERATORS SCALE: NTS	STANDARD DETAILS	V15

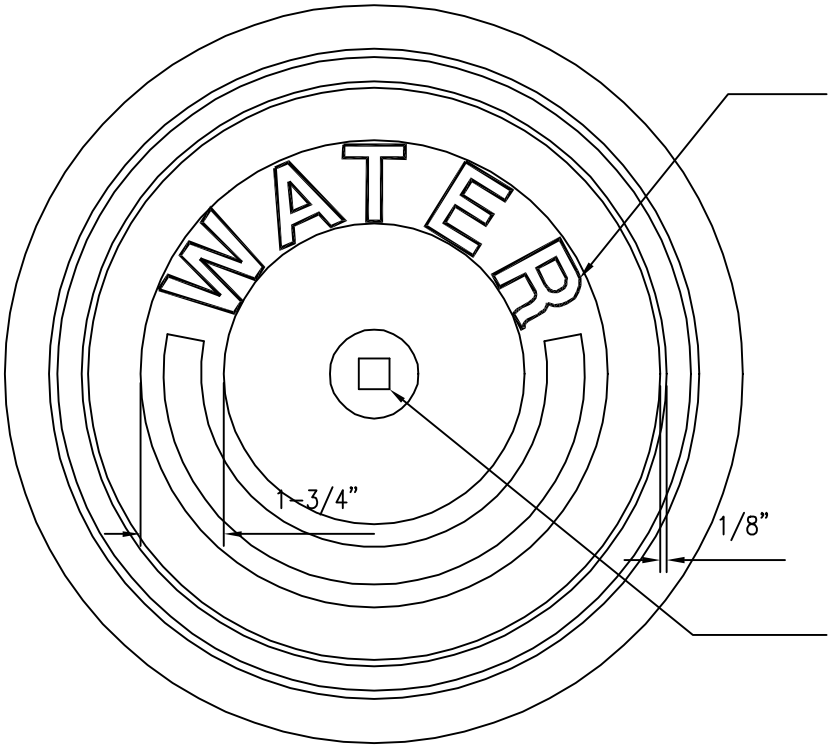

NOTE:

ALL CASTINGS SHALL BE MADE ACCURATELY TO THE DIMENSIONS SHOWN. SEAT AND COVER SHALL BE MACHINED, NOT GROUND TO SECURE FLAT AND TRUE SURFACES. THE COVER SHALL NOT RATTLE IN ANY POSITION.

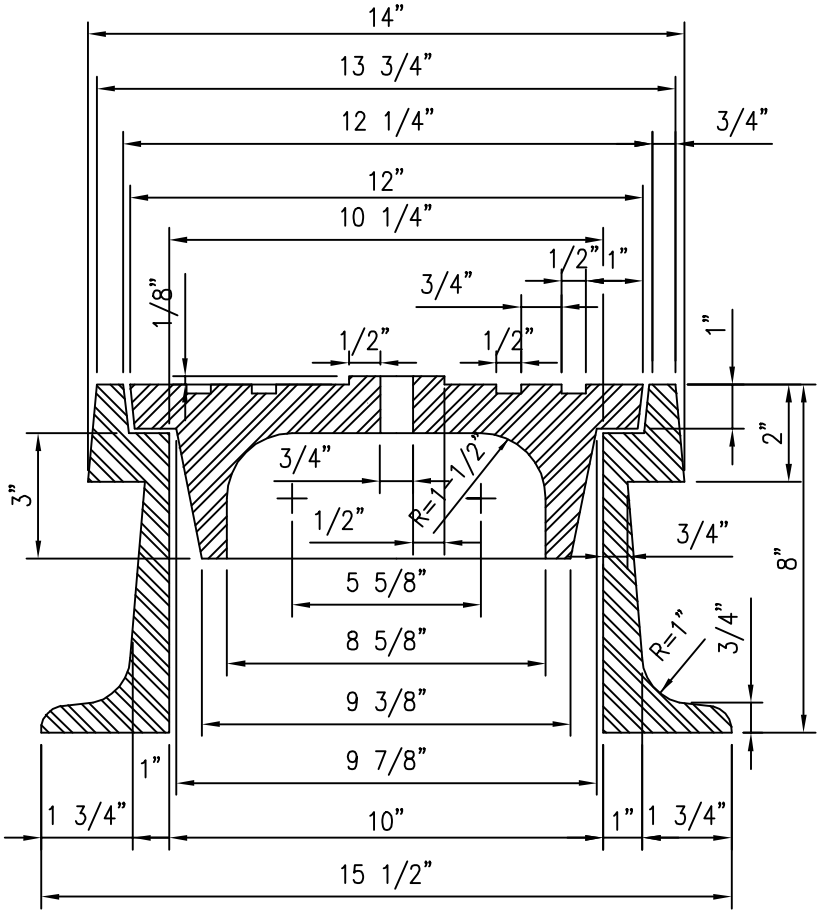

SEE TABLE 200-9 FOR MINIMUM WEIGHT REQUIREMENTS

CAST IRON FRAME & COVER

	2002
	REVISION

OAHU MAUI HAWAII	**12" VALVE BOX** **FRAME & COVER** **SCALE: NTS**	**STANDARD DETAILS**	**V16**

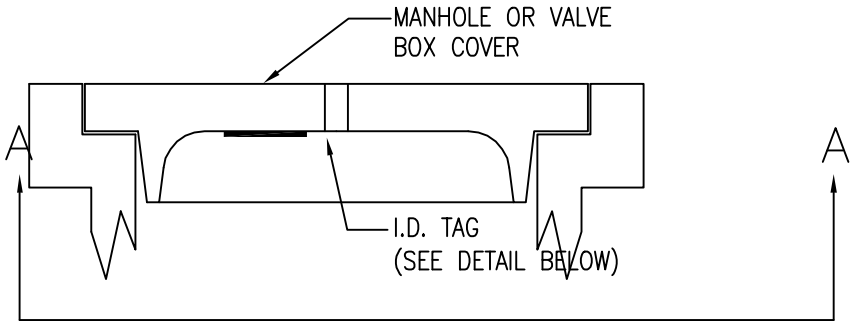

SECTION

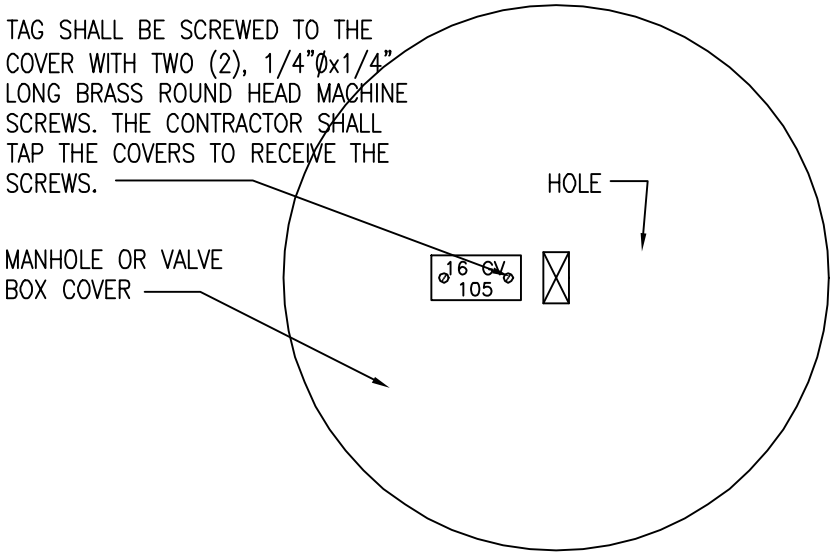

SECTION A–A

NOTES:

1. THE CONTRACTOR SHALL VERIFY VALVE DATA WITH THE VALVE MANUFACTURER PRIOR TO STAMPING I.D. TAG.
2. I.D. TAG SHALL BE INSTALLED ON UNDERSIDE OF ALL NEW MANHOLE OR VALVE BOX COVER.
3. PAYMENT FOR THE FURNISHING AND INSTALLATION OF I.D. TAGS WILL NOT BE MADE DIRECTLY BUT SHALL BE INCLUDED IN THE UNIT PRICE BIDS FOR VALVES.

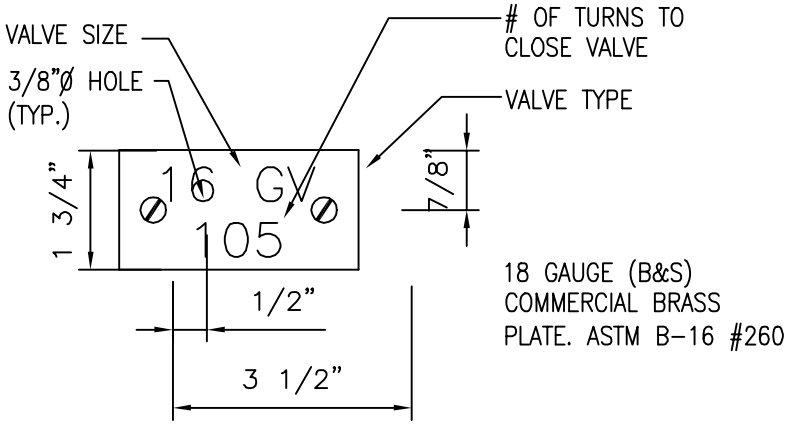

TYPICAL TAG

VALVE TYPE ABBREVIATIONS

GATE VALVE	GV
BEVEL GEARED GATE VALVE	BGGV
BUTTERFLY VALVE	BV

	2002
	REVISION

OAHU HAWAII	IDENTIFICATION TAG FOR MANHOLE OR VALVE BOX COVER SCALE: NTS	STANDARD DETAILS	V17

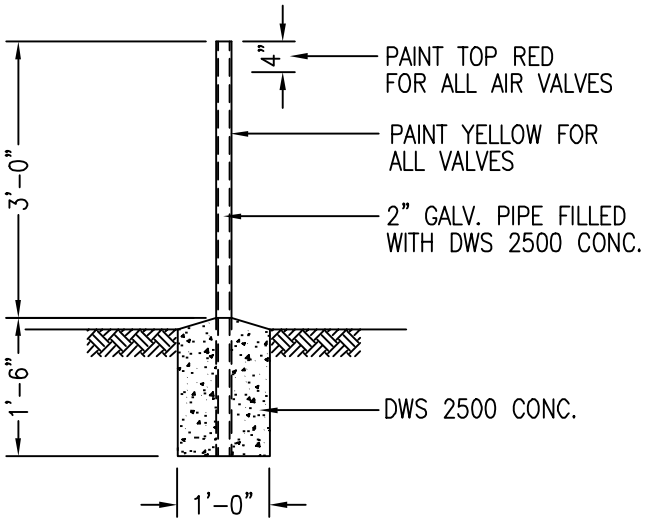

DETAIL OF VALVE MARKER

			2002
			REVISION
KAUAI OAHU MAUI	VALVE MARKER SCALE: NTS	STANDARD DETAILS	V18

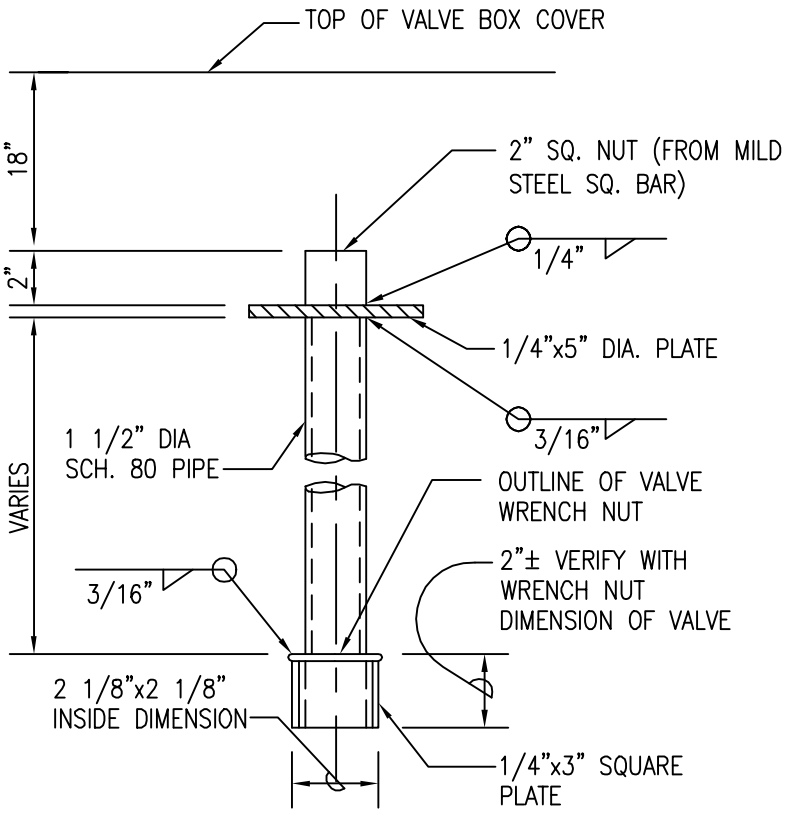

VALVE NUT EXTENSION DETAIL

NOTE:

1. FURNISH AND INSTALL VALVE EXTENSION TO 18" FROM TOP OF VALVE BOX COVER.
2. VALVE EXTENSION SHALL BE HOT-DIPPED GALVANIZED AFTER FABRICATION.
3. FOR VALVE OPERATORS DEEPER THAN 3.5' TO FINISH GRADE.

			2002
			REVISION
KAUAI MAUI HAWAII	VALVE NUT EXTENSION SCALE: NTS	STANDARD DETAILS	V19

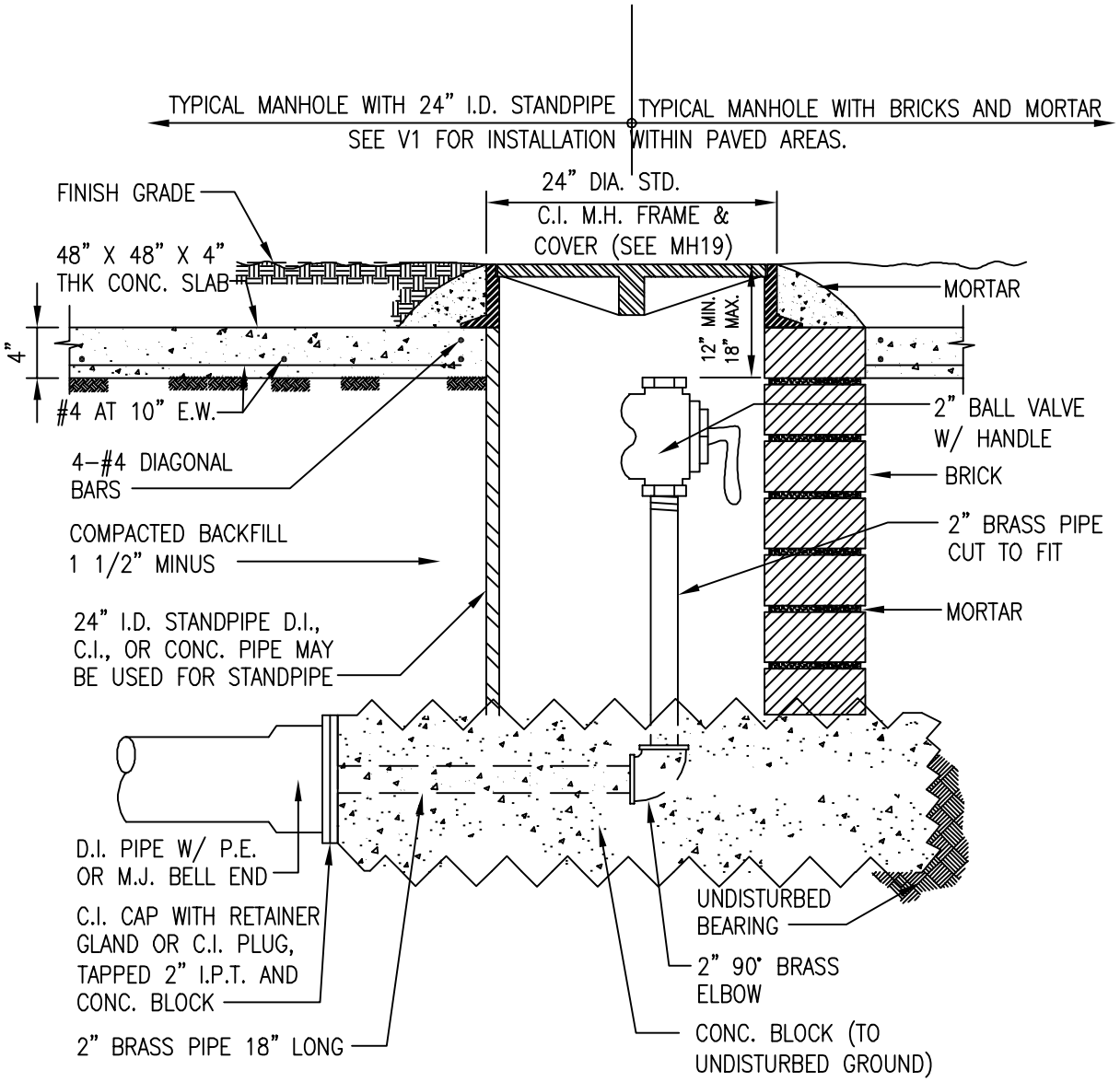

			2002
			REVISION
HAWAII	2" CLEANOUT AT DEAD ENDS SCALE: NTS	STANDARD DETAILS	V20

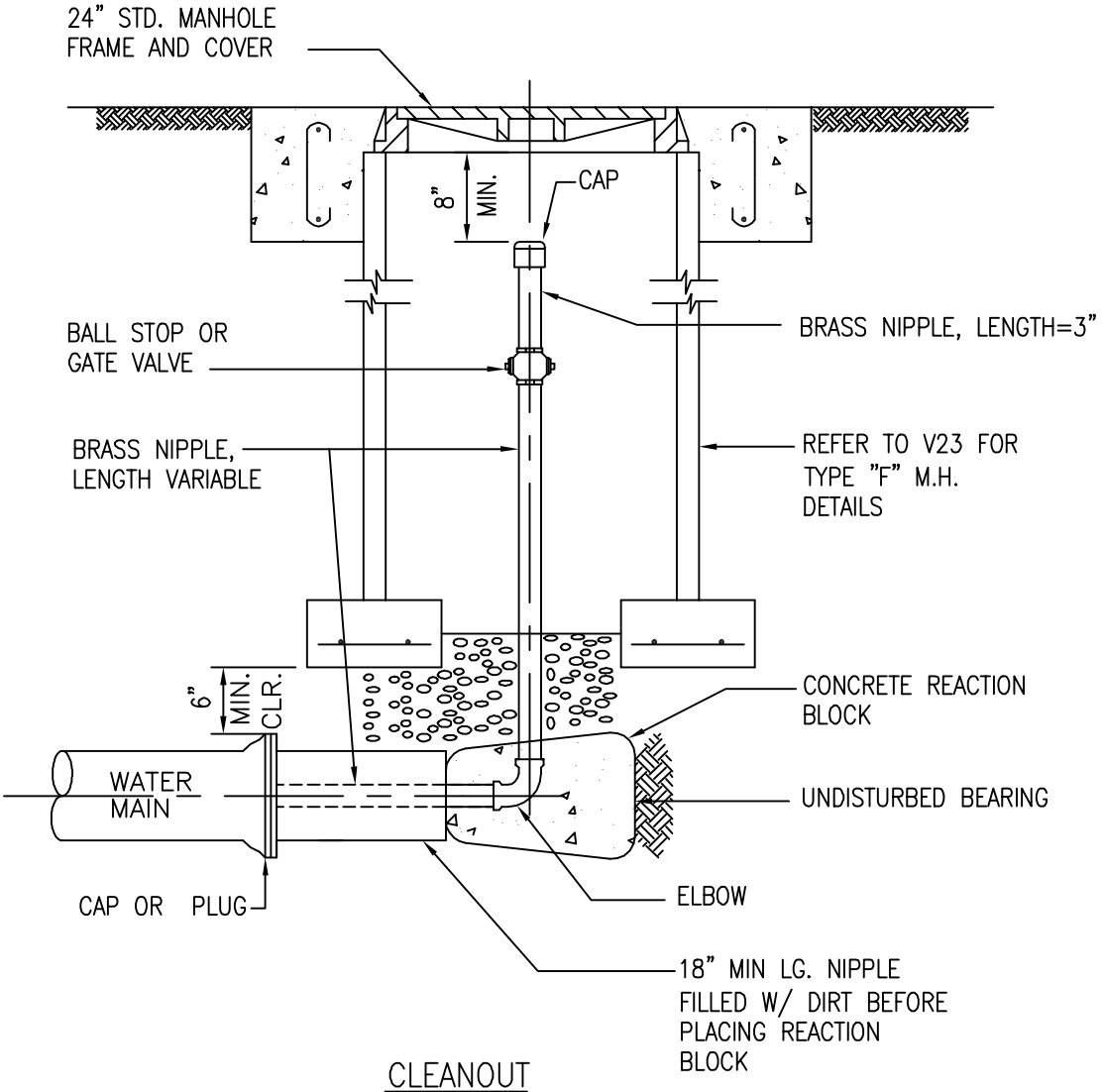

CLEANOUT

SCHEDULE OF CLEANOUTS		
MAIN SIZE	CLEANOUT SIZE	MANHOLE ENCLOSURE
6" & SMALLER	2"	TYPE "F"
8" & 12"	2 1/2"	TYPE "F"
LARGER THAN 12"	FURNISH SPECIAL DESIGN FOR DISCHARGE NOZZLE OR HYDRANT ASSEMBLY	

			2002 REVISION
MAUI	CLEANOUT SCALE: NTS	STANDARD DETAILS	V21

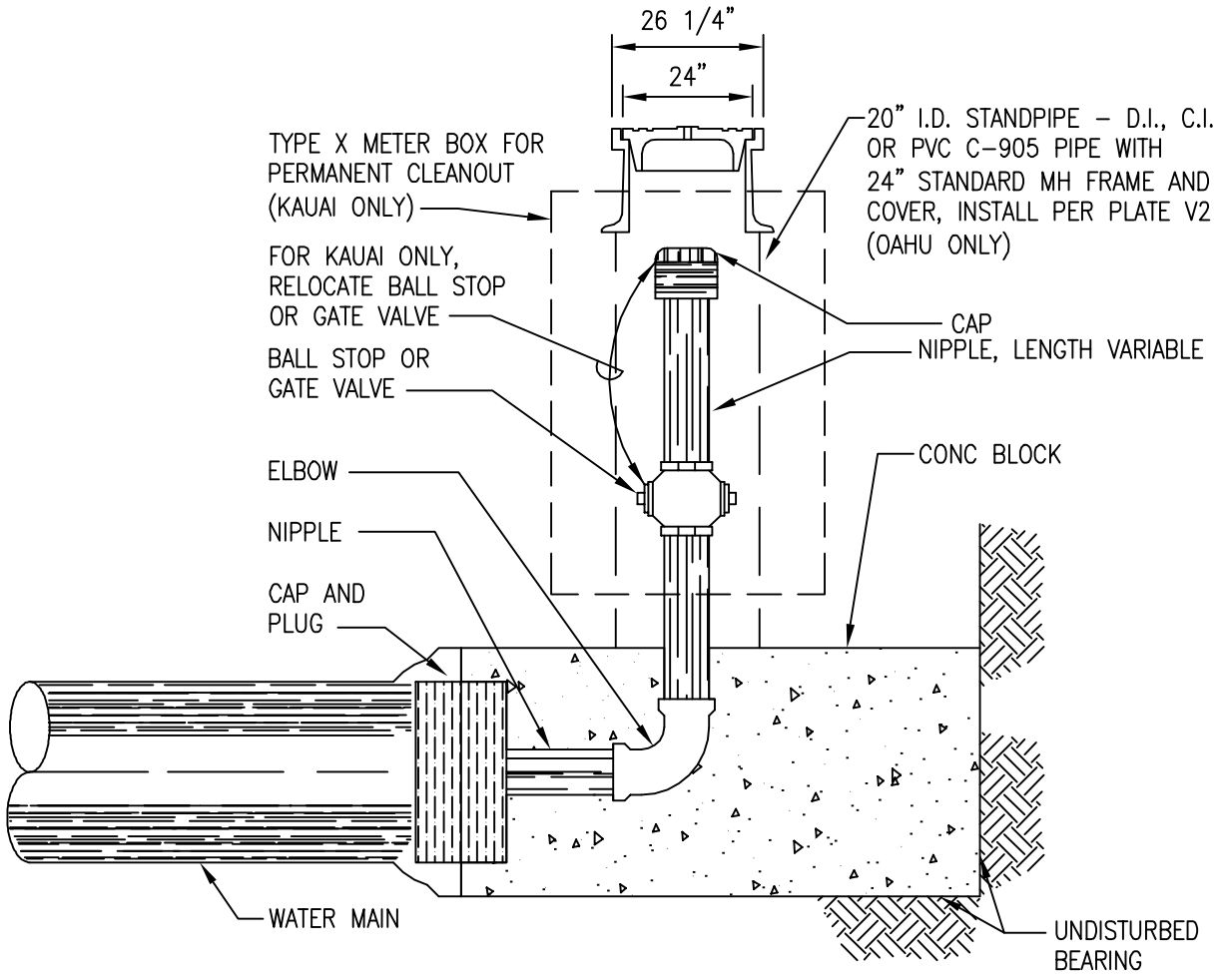

TYPICAL DETAIL OF CLEANOUT

SCHEDULE OF CLEANOUTS		MATERIAL
PIPE SIZE	CLEANOUT SIZE	TYPE OF PIPE
8" & SMALLER	2 1/2"	BRASS
12" TO 20"	4"	GALV.
24" & LARGER	6"	GALV.

NOTES:
1. CLEANOUT SHALL INCLUDE THE CAP, PLUG, AND ALL APPURTENANCES AS SHOWN.
2. FOR OAHU ONLY: FOR PIPES 8" & SMALLER:
   a) ALL TEMPORARY PIPES SHALL BE OF GALVANIZED MATERIALS.
   b) FOR PERMANENT CLEANOUT INSTALLATION, ONLY BRASS OR COPPER FITTINGS SHALL BE USED.
3. FOR KAUAI ONLY: ALL CLEANOUTS INSTALLATION SHALL BE BRASS OR COPPER PIPE FITTINGS.

2002
REVISION

KAUAI
OAHU

CLEANOUTS AND RISER

SCALE: NTS

STANDARD DETAILS

V22

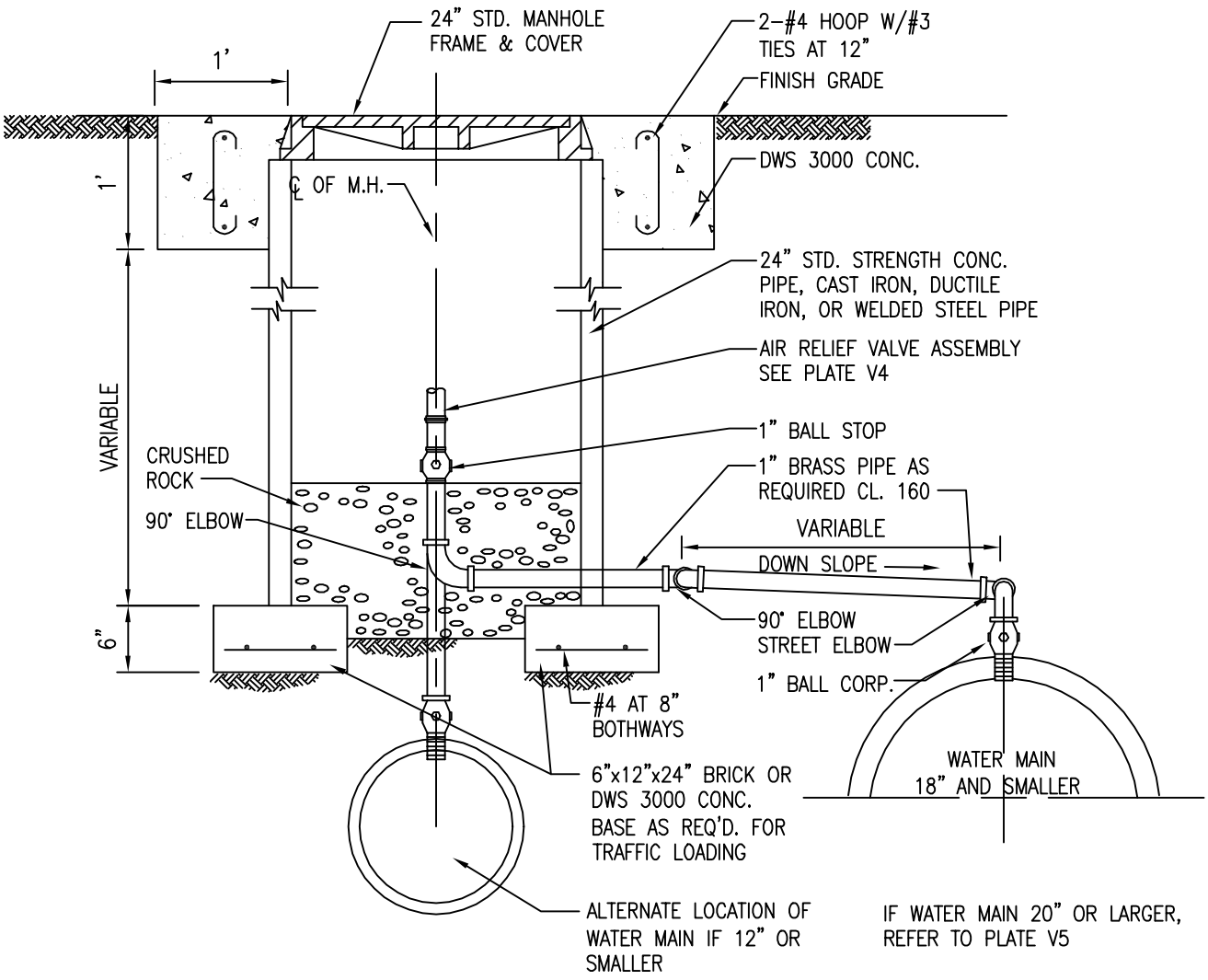

SECTION THROUGH MANHOLE

NOTE:

POSITION AIR VALVE BODY 4" FRONT OR BACK FROM INSIDE WALL OF MANHOLE.

			2002
			REVISION
MAUI	ARV INSTALLATION TYPE "F" MANHOLE SCALE: NTS	STANDARD DETAILS	V23

APPENDIX

APPENDIX A - LIST OF TABLES

APPENDIX B - INDEX

SUMMARY OF TABLES

TABLE NO.	DESCRIPTION	PAGE
100-1	Water Main Clearances	102-2
100-2	Minimum Easement Width Required	102-3
100-3	Cover for Water Mains	102-4
100-4	Types and Classes of Mains	102-5
100-5	Concrete Jacket Requirements for Sewer Mains	102-7
100-6	Maximum Permissible Deflection for Laying Mechanical Joint Pipe	102-8
100-7	Maximum Permissible Deflection for Laying Push On Joint Pipe	102-9
100-8	Maximum Permissible Deflection for Laying Concrete Cylinder Pipe	102-10
100-9	Maximum Distance Between Main Valves	103-1
100-10	Types and Size of Main Valves	103-2
100-11	Classes of Valves	103-2
100-12	For Oahu Only: Maximum Depth of Pipe Invert for Valve Box Installation	103-3
100-13	Types of Manholes Required for Given Situation	103-4
100-14	Maximum Allowable Direct Taps Into Ductile Iron Main	104-4
100-15	Service Saddles or Bossed Tees for Taps in Mains	104-4
100-16	Required Sizes and Number of Air Relief Valves	104-6
100-17	Backflow Prevention Requirements	107-2
100-18	Domestic Consumption Guidelines	111-3

TABLE NO.	DESCRIPTION	PAGE
100-19	Fire Flow Requirements	111-4
100-20	Demand Factors	111-5
100-21	"C" Factors	111-5
100-22	Total Pump Capacity Criteria	111-7
200-1	Standard Dimensions of Mechanical Joint and Push-On Joint Ductile Iron Pipe	202-1
200-2	Standard Dimensions of Ductile Iron Pipe for Use With Treaded Flanges	202-2
200-3	Pretensioned Concrete Cylinder Pipe Lining and Coating Thickness	203-3
200-4	Cement Mortar Cylinder Pipes Lining and Coating Thickness	203-4
200-5	PVC C900 Pipe Standard Dimensions	204-2
200-6	PVC C905 Pipe Standard Dimensions	204-2
200-7	By-Pass Valves	205-2
200-8	ARV	205-7
200-9	Minimum Weight for Manhole/Valve Box Covers and Frames	207-1
200-10	Polyethylene Tubing	208-2
200-11	S4C for Pipe Cushion	209-1
200-12	Copper Pipe Cushion	209-2
300-1	Trench Width	302-3
300-2	Bolt Torque	302-14
300-3	Wrench Length	302-14
300-4	Cement Mortar Mix	302-18

TABLE NO.	DESCRIPTION	PAGE
300-5	Required Ball Corp Sizes at Main Valves	302-22
300-6	Minimum Curving Radius	302-26
300-7	Total Percentage by Weights, Passing Sieves with Square Openings	303-8
300-8	Total Percentages by Weight, Passing Sieves with Square Openings	303-8
300-9	Concrete Classes and Uses	303-10
300-10	Minimum Curing Periods for Concrete	303-18
300-11	Rod Properties	303-28
300-12	Fine Aggregate for Mortar	303-43
300-13	Base Course Aggregate	303-85
300-14	Filler Material	303-86
300-15	Asphalt Cement Grading	303-87
300-16	Chain Link Fence Post	303-93
300-17	Backflow Prevention Assembly Height	305-2
300-18	Casing Thickness	306-3

INDEX

A

Access Road and Paved Area 303-84
Asphaltic Concrete Pavement 303-85
Concrete Curb 303-91
Concrete Gutter 303-91
Coral Pavement 303-90
Description 303-84
Excavation 303-84
Header 303-92
Payment 303-92
Reinforced Concrete Pavement 303-88
Accidents 301-2
Acoustical Tile 303-69
Applied Tiles 303-70
Cleaning and Rejection 303-72
Description 303-69
Guarantee 303-73
Payment 303-73
Replacement Provisions 303-73
Samples 303-70
Suspended System 303-71
Work Specified Elsewhere 303-70
Air Relief Valves/Combination Air Valves
Approved Material 402-8
Construction 302-23
Material 205-6
Planning 104-5
All Thread Rod 402-52
Angle Valve 402-27
Architectural Specialties 303-75
Description 303-75
Payment 303-76
Toilet Compartment 303-76
Toilet Paper Holder 303-75
Towel Dispenser and Mirror 303-76
Asphalt (SC-4) Pavement (Cold Mix), Slow Curing 302-46
General 302-46
Payment 302-47
Asphalt Seal for Reservoir Interior Perimeter 212-1

Asphaltum 212-1

B

Backfill Material 209-2
Backfill, Trench 302-6
After Testing 302-7
Backfill at Valve Boxes 302-8
Completion of Backfill 302-8
General 302-6
Payment 302-9
Preparation of Trench Bottom 302-7
Prior to Testing 302-7
Backflow Prevention Assembly
Construction
General 305-1
Installation 305-1
Payment 305-3
Testing 305-3
Planning
General 107-1
Requirements for Backflow Prevention 107-1
Requirements for Non-specified Facilities 107-1
Ball Corps 208-3
Approved Material 402-20
Ball Stops 208-4
Approved Material 402-22
Ball Meter Valves 402-22
Ball Valves and Appurtenances 205-5
Bitumastic Coating 212-1
Blasting 302-11
General 302-11
Payment 302-11
Blowoff Lines 104-6
Brass Pipe 208-1
Brass Plates 207-3
Brass Plugs 402-7
Brass Products 211-1
Bricks 209-3
Butterfly Valves and Manual Operators
Approved Material 402-14
Butterfly Valves 402-14
Manual Operator 402-15

Construction 302-21
General 302-21
Payment 302-22
Materials 205-4
Butterfly Valves 205-4
General 205-4
Manual Actuator 205-4
Manufacturer's Identification 205-4
Submittals for Approval 205-4

C

Carpentry and Millwork 303-52
Additional Requirements 303-54
Description 303-52
Materials 303-52
Payment 303-55
Wood Preservative and Termite Treatment 303-53
Caulking 303-57
Application 303-57
Cleaning 303-58
Description 303-57
Materials 303-57
Payment 303-58
Check Valves 402-17
Horizontal Lift Check Valves (200-pound Steam) 402-18
Inline Spring 402-18
Silent Check Valves 402-18
Swing Check Valves 402-17
Vertical Check Valves 402-17
Chlorination of Water Pipelines 302-38
Disinfection and Sampling Procedure (For Oahu Only) . . . 302-39
Disinfection Procedure (For Hawaii and Kauai Only) 302-38
Disinfection Procedure (For Maui Only) 302-41
Disposal of Chlorinated Water 302-41
General 302-38
Payment 302-41
Procedural Guideline 302-41
Repetition of Procedure 302-41
Chlorinators 106-1
Clay, "Adobe" or 302-10
General 302-10
Payment 302-10

Cleaning Up 301-5
Clean-Up, Structure 303-36
Description 303-36
Payment 303-37
Cleanouts
Planning
Permanent Cleanouts 104-6
Temporary Cleanouts 104-6
Construction
General 302-45
Payment 302-45
Concrete Blocks, Jackets, Beams, Curb Guards, Slab for Fire Hydrants and Meter Boxes, Manhole and Valve Box Collar 302-30
General 302-30
Payment 302-31
Planning 104-5
Concrete Cylinder Fittings 203-5
Factory Testing of Steel Cylinder 203-6
Fittings 203-5
General 203-5
Reinforcement 203-5
Concrete Cylinder Pipe
Construction 302-15
Cement Mortar Mix 302-18
Corrosion Protection 203-2
Exterior Coating 203-2
Field Cutting and Welding - Station 302-18
Adjustment and Closures
Flanged Joints 203-2
General 302-15
Guarantee 203-2
Interior Lining 203-1
Payment 302-18
Rejection 203-2
Steel Cylinder 203-1
Water 203-2
Materials 203-1
Cement Mortar Lined and Coated Cylinder Pipe 203-4
General 203-1
Pretensioned Concrete Cylinder Pipe 203-2

Concrete Work 303-7
Changes in Proportions of Materials by Manager 303-11
Construction and Expansion Joints 303-18
Conveying, Placing and Handling 303-16
Damaged or Defective Concrete 303-14
Description 303-7
Failure to Meet Compressive Strength Requirements 303-13
Field Tests of Concrete 303-13
Formwork 303-14
Job Site Mixing 303-12
Materials 303-7
Measurements of Materials 303-12
Payment 303-21
Prior Test Records 303-11
Proportioning Concrete Mix 303-9
Protecting and Curing 303-18
Retempering 303-13
Surface Finishes 303-19
Time of Hauling Ready-Mixed Concrete 303-12
Truck Mixing (Mixed-in-Transit Concrete) 303-12
Workability of Concrete 303-11
Confined Spaces 302-49
Connections, Relocations and Lowering 302-41
of Water Mains and Laterals
General 302-41
Payment 302-43
Construction Plans
As-Built Construction Plans 112-5
General 112-1
Miscellaneous Submittals 112-4
Plans 112-1
Submittals During Construction 112-5
Submittals Prior to Construction 112-5
Consumption Guideline, Domestic 111-1
Copper Tubing 208-1
Approved Material 402-24
Corrosion Protection 302-49
General 302-49
Payment 302-49
Couplings 208-5
Couplings - Pipelines 402-4
Crushed Rock 209-2

Crystallization Products 212-2
Approved Material 402-52

D

Demand Factors 111-2
Dewatering 302-9
General 302-9
Payment 302-10
Doors and Frames 303-63
Coordination 303-63
Description 303-63
Fiberglass Reinforced Plastic Doors 303-66
and Frames (For Hawaii Only)
Hollow Metal Doors and Frames 303-63
Payment 303-68
Shop Drawings 303-63
Solid Core Flush Panel Doors 303-66
Drainage 110-3
Drainage System 303-81
Concrete Gutter and Ditch 303-83
Description 303-81
Payment 303-84
Storm Drains 303-81
Storm Drain Manholes, Catch Basins and Headwall 303-83
Subsoil or Perimeter Drains 303-83
Drywall Construction 303-55
Description 303-55
Installation 303-56
Materials 303-55
Manufacturer 303-55
Payment 303-56
Samples 303-56
Ductile Iron Pipe, Fittings and Appurtenances
Approved Material
AWWA C153 (compact) Fittings 402-1
Cast Iron Fittings (Gray or Ductile) 402-1
AWWA C110
Cast Iron Pipe (Ductile), Push-On Joints, ... 402-1
Mechanical Joints, Flanged Joints

Construction 302-12
Flanged Ends 302-15
General 302-12
Mechanical Joint 302-13
Payment 302-15
Push-on Joint 302-14
Materials 202-1
Bolts and Nuts 202-3
Corrosion Protection 202-3
Exterior Coating 202-3
Fittings 202-2
Interior Lining 202-3
Polyethylene Encasement 202-3

E

Electrical Work 304-2
Equipment Shop Drawing 304-4
General 304-2
Materials and Workmanship 304-3
Payment to Utility Companies 304-3
Relocation of Electrical Devices 304-4
Scope of Work 304-2
Work by Others 304-2
Emergencies, Provision for 301-2
Excavation for Manholes 302-11
General 302-11
Payment 302-11
Excavation for Thrust Blocks, Beams and Test Blocks 302-11
General 302-11
Payment 302-12
Excavation, Surplus 302-12
General 302-12
Payment 302-12
Excavation, Trench 302-3
General 302-3
Payment 302-5
Existing Utilities and Structures, Responsibility Regarding . . . 301-3
Explosives 301-6

F

Facility Piping 303-33
Description 303-33
Material and Construction 303-33
Payment 303-33
Fence and Gate, Chain Link 303-92
Description 303-92
Installation 303-94
Material 303-93
Payment 303-95
Fire Extinguishers 303-77
Fire Flows, Duration, and Hydrant Spacing 111-1
Fire Hydrants 104-1
Approved Material 402-28
Construction 302-28
General 302-28
Payment 302-29
Materials
Dry-Barrel Hydrant 206-2
General 206-1
Wet-Barrel Hydrants 206-2
Planning
Accessibility 110-2
Depth 104-2
Location 104-1
Outlets 104-2
Spacing 110-1
Fire Hydrant Markers 302-30
General 302-30
Materials 206-3
Payment 302-30
Fittings, Special 202-5
Pipeline Couplings 202-5
Fittings and Specials (Ductile Iron, Concrete 302-20
Cylinder, Plastic PVC Pipe)
General 302-20
Payment 302-20
Flanged Adapters 402-6
Flanged Joint 202-5
Fittings 202-5
General 202-5
Flow Meters 106-1

Flux 402-20

G

Gas Mask 303-77
Gaskets 402-3
Gate Valves 205-1
Approved Material 402-11
150-Pound Valves 402-11
200-Pound Valves 402-12
250-Pound Valves 402-13
Resilient Wedge (AWWA C509) 402-13
Construction 302-21
General 302-21
Payment 302-22
Planning
General 205-1
Valves Three (3)-Inch and Smaller 205-2
Metal-Seated Valves Four (4)-Inch and Larger 205-2
Resilient-Seated Gate Valves 205-3
Geotextile Fabrics 212-2
Gland 402-5

H

Hardware, Finish 303-68
Description 303-68
General Requirements 303-68
Payment 303-69
Hydraulic Control Valves 402-19

I

Inspection 301-6
Instrumentation 106-1
Irrigation 307-8
Clean Up 307-18
Construction 307-12
Description 307-8
Explanation and Precedence of Drawing 307-8
General 109-1
Guarantee 307-19
Inspection 307-18
Materials 307-9
Operation of Controller and System 307-18

Payment 307-19
Responsibilities 307-12
Substitutions 307-12
Testing 307-18

L

Landscaping 307-1
Clean Up 307-6
Demolition 307-1
Description 307-1
Final Inspection and Acceptance 307-7
Materials 307-1
Payment 307-8
Planting 307-3
Planting Maintenance 307-6
Protection 307-7
Trees, Plantings, Shrubs and Grass 301-3

M

Mains
Corrosion Protection 102-11
Cover 102-4
Deflection Per Joint 102-7
Diameter 102-4
Jackets 102-6
Location 102-1
Off Roadways 110-3
Paved Traveled Areas 110-3
Pipeline Easements 102-3
Pipeline Sizing 111-5
Second Feed 110-3
Street Ends 102-10
Type, Class 102-5
Unpaved Areas 110-3
Manager, Authority of 301-1
Manhole 302-32
General 302-32
Payment 302-33
Reconstructing Existing Manholes 302-32
Top and Bottom Slabs 302-32
Walls 302-32
Manhole Castings 402-19

Manhole Covers and Frames 207-1
Manhole, Eyebolts, Nuts, and Washers for Type “A” 207-2
Manhole Rungs 207-2
Approved Material 402-26
Hot-Dip Galvanized or Stainless Steel Rungs 207-2
Steel Reinforced Copolymer Polypropylene Plastic Rungs 207-2
Material List, Approved 402-1
Materials for Construction, Quality of 301-2
Mechanical Joint 202-4
Fittings 202-4
General 202-4
Metal Work, Miscellaneous Iron and 303-58
Aluminum 303-60
Copper 303-61
Description 303-58
Exterior Access Ladder 303-62
Interior Access Ladder 303-62
Payment 303-63
Reservoir Ventilator Louvers 303-62
Shop Drawings 303-59
Steel 303-59
Verifying Conditions 303-59
Meter Box Covers and Frames 207-2
Meter Boxes
Approved Material 402-26
Construction 302-27
General 302-27
Payment 302-28
Materials 208-6
Planning 104-4
Monuments, Disturbing 301-3
Motors
Construction 304-1
Horizontal Motors 304-1
Submersible Motors 304-1
Vertical Motors 304-1
Planning 106-1
Mud Removal and Crushed Rock Trench Stabilization 302-10
General 302-10
Payment 302-10

P

Painting 303-73
Clean Up 303-75
Description 303-73
General Requirements 303-74
Metal Surfaces 303-75
Paint Schedule 303-75
Paint Schedule for Existing Surfaces 402-48
Paint Schedule for New Surfaces 402-30
Payment 303-75
Samples 303-74
Surface Preparation 303-74
Patented Articles 301-6
Payment, Measurement and 301-1
Petroleum Asphaltic Coatings (Factory Applied) 212-3
Pipes and Appurtenances, Removing or Demolishing, ... 302-43
Reinstalling or Returning Existing
General 302-43
Payment 302-44
Pipe Cleaning 302-36
Pipe Cushion 209-1
For Kauai, Maui and Oahu 209-1
For Hawaii Only 209-2
Pipe Hangers, Lateral Bracings, and Inserts
Construction 302-45
General 302-45
Payment 302-45
Materials 210-1
Plastic Pipe
Approved Material
PVC C-900 Pipe 402-2
PVC C-905 Pipe 150 psi 402-2
PVC Fittings AWWA C907 402-2
Construction 302-19
General 302-19
Payment 302-19
Materials 204-1
AWWA C900 PVC Pipe 204-1
AWWA C905 PVC Pipe 204-2
Fittings 204-2
General 204-1

Plastic Tubing 208-1
Plastic Tubing Markings 208-3
Polyethylene Tubing 208-1
Plumbing 303-77
Cutting and Patching 303-78
Fixtures 303-79
General 303-77
General Requirements 303-77
Installation 303-79
Materials 303-78
Payment 303-81
Schematic Drawings 303-78
Tests 303-81
Polywrap 402-6
Premolded Filler 209-1
Pressure Gages and Appurtenances 402-52
Pressure Tests, Pipe 302-37
General 302-37
Payment 302-38
Private Development Projects, Additional 301-7
Requirements for
Private Property, Use and/or Damage to (Property 301-6
Owned Other Than by the Contractor)
Public Thoroughfare, Notice to Public of Closing 301-5
or Obstructing
Pumps
Construction 304-1
Horizontal Centrifugal Pumps 304-1
Submersible Pumps 304-1
Vertical Turbine Pumps 304-1
Planning 106-1
Pump Capacity, Total 111-6
Pump Station Mechanical Equipment 304-4
Check Valves 304-5
Chlorinators 304-5
Hydraulic Control Valves 304-5
Mechanical Bolts and Nuts 304-5
Metal-Seated Butterfly Valves 304-5
Rubber-Seated Butterfly Valves and Manual Operators . . 304-4
Push-on Joint 202-4
Fittings 202-5
General 202-4

R

Reinforcing Steel 303-21
Description 303-21
Fabrication 303-21
Materials 303-21
Payment 303-22
Placing 303-21
Protection of Material 303-22
Splicing 303-22
Reservoirs 105-3
Access to Reservoir 105-4
Blowoff Lines 105-4
Chlorination Line 105-4
Exterior and Interior Ladders 105-4
Floor Cement Topping 105-4
Influent - Effluent Line 105-3
Instrument Pressure Line 105-3
Overflow Line 105-3
Painting 105-4
Perimeter Road 105-4
Sampling Line 105-3
Size 105-3
Type 105-3
Washdown Connection 105-3
Washout Line 105-3
Reservoir Capacity 111-6
Reservoir Leakage Test and Disinfection 303-34
General 303-34
Payment 303-36
Reservoir Leakage Test and Disinfection Procedure 303-34
Reservoir, Protection of 303-37
General 303-37
Payment 303-37
Reservoir, Prestressed Concrete 303-25
Cutting of Strands or Rods 303-32
General 303-25
Grouted Tendons 303-29
Grouting 303-32
Layout Drawings 303-32
Mill Certificates 303-32

Payment 303-32
Post-Tensioning System 303-26
Prestressing 303-31
Steel Work 303-29
Storage and Protection of Materials 303-32
Stress Retention 303-31
Reservoir, Reinforced Concrete 303-22
Built-Up Roofing 303-25
Cement Topping Coat 303-24
Concrete Work 303-23
Construction and Expansion Joints 303-23
Horizontal Construction Joint 303-23
Interior Perimeter Seal 303-23
Roof Sliding Joint 303-23
Surface Finish 303-24
Wall Sliding Joint 303-23
Description 303-22
Leakage Test 303-25
Payment 303-25
Site Work 303-22
Restoring Pavements, Driveways, Sidewalks, Curbs, ... 302-47
Gutters, Fences, Walls and Miscellaneous
General 302-47
Payment 302-48
Subbase and Base Course 302-48
Riprap over Trench 104-5
Roofing, Built-Up 303-45
Application 303-47
Description 303-45
Guarantee 303-45
Inspection of Surfaces 303-46
Manufacturer Representative 303-46
Payment 303-47
Products 303-45
Work Specified in Other Sections 303-45
Roofing and Siding, Metal 303-47
Clean Up 303-50
Coordination 303-47
Dissimilar Materials 303-50
Finish Coating for Metal Roofing and Siding 303-50
General 303-47
Guarantee 303-47

Installation and Workmanship 303-49
Materials 303-48
Payment 303-50
Submittals 303-47
Roofing Tile, Concrete 303-44
Color Selection 303-44
Description 303-44
Installation 303-45
Material 303-44
Payment 303-45
Warranty 303-45

S

Sampling Tube and Chlorine Injection Line 303-33
Description 303-33
Material and Construction 303-33
Payment 303-34
Sanitation 301-2
Service Laterals
Approved Material 402-20
Construction 302-24
Copper Service Laterals and Pipes 302-24
General 302-24
Payment 302-26
Plastic Service Laterals and Pipes 302-25
Materials 208-1
Planning 104-2
Connection to Main 104-3
Cover 104-3
Diameter 104-3
Location 104-2
Type of Lateral and Connection 104-3
Service Saddles 208-5
Approved Material 402-24
Service Valves, 3” and Smaller 402-15
Ball Valves 402-16
Gate Valves 402-15
Sheathing 302-9
General 302-9
Payment 302-9
Sheet Packing (Gasket Material) 402-3
Sitework 303-1

Additional Requirements 303-5
Clean Up 303-4
Clearing and Grubbing 303-1
Description 303-1
Fill, Backfill, Finishing and Grading 303-3
Grading Control 303-4
Payment 303-5
Structure and Site Excavation 303-2
Surplus Excavated Material 303-4
Sleeves Through Retaining Walls, Pipe 302-45
General 302-45
Payment 302-45
Solder 402-21
Sound Attenuating Enclosures 303-73
Description 303-73
General 303-73
Payment 303-73
Stone Masonry 303-42
Description 303-42
Installation 303-43
Materials 303-42
Payment 303-44

T

Tank Sliding Joint Material 402-53
Tapping Valves and Sleeves 205-5
Approved Material 402-4
Tile Work, Quarry 303-51
Application 303-51
Cleaning 303-52
Description 303-51
Expansion Joint Sealant 303-52
Finishing 303-51
Materials 303-51
Payment 303-52
Protection 303-52
Removal of Condemned Tiles 303-52

U

Unit Masonry 303-37
Anchors 303-39
Certificate 303-38
Cleaning 303-41
Description 303-37
Knock-outs and Bond-Beams 303-41
Materials 303-37
Mortar and Grout 303-38
Payment 303-42
Reinforcing 303-39
Sample Blocks 303-38
Storage and Handling 303-39
Tolerances 303-41
Workmanship 303-40

V

Valve Box Covers and Frames and Standpipes 207-3
Valve Boxes
Approved Material 402-19
Construction 302-34
General 302-34
Payment 302-34
Planning 103-3
Valves, Main
Location, Type, Working Pressure 103-1
Valve Markers
Construction 302-46
General 302-46
Payment 302-46
Materials 210-1
Valves, Shutoff 106-1

W

Wall Sliding Joint Material 212-3
Warning Tape 212-3
Water Master Plan 113-1
Development by Phases 113-1
Plans 113-1
Water Supply 302-35
Water System, Existing 302-35
Waterstops 212-4

Welded Wire Fabric 303-22
Description 303-22
Material and Placing 303-22
Payment 303-22
Well Drilling
Construction 306-1
Abandonment of Well 306-5
Additional Well Drilling, Cleansing and Testing 306-6
Clean-Up 306-9
Filling of Annular Space 306-4
Mobilization and Demobilization 306-1
Plumbness and Alignment 306-4
Set-Up for Yield-Drawdown and 306-7
Sustained Pumping Tests of Well
Testing for Yield-Drawdown and 306-8
Sustained Pumping
Well Casing 306-2
Well Cleansing 306-6
Well Completion 306-9
Well Drilling Below Bottom of Casing 306-5
Well Drilling to Casing Depth 306-1
Planning 108-1